Outdoor Unit : AH-W096A0

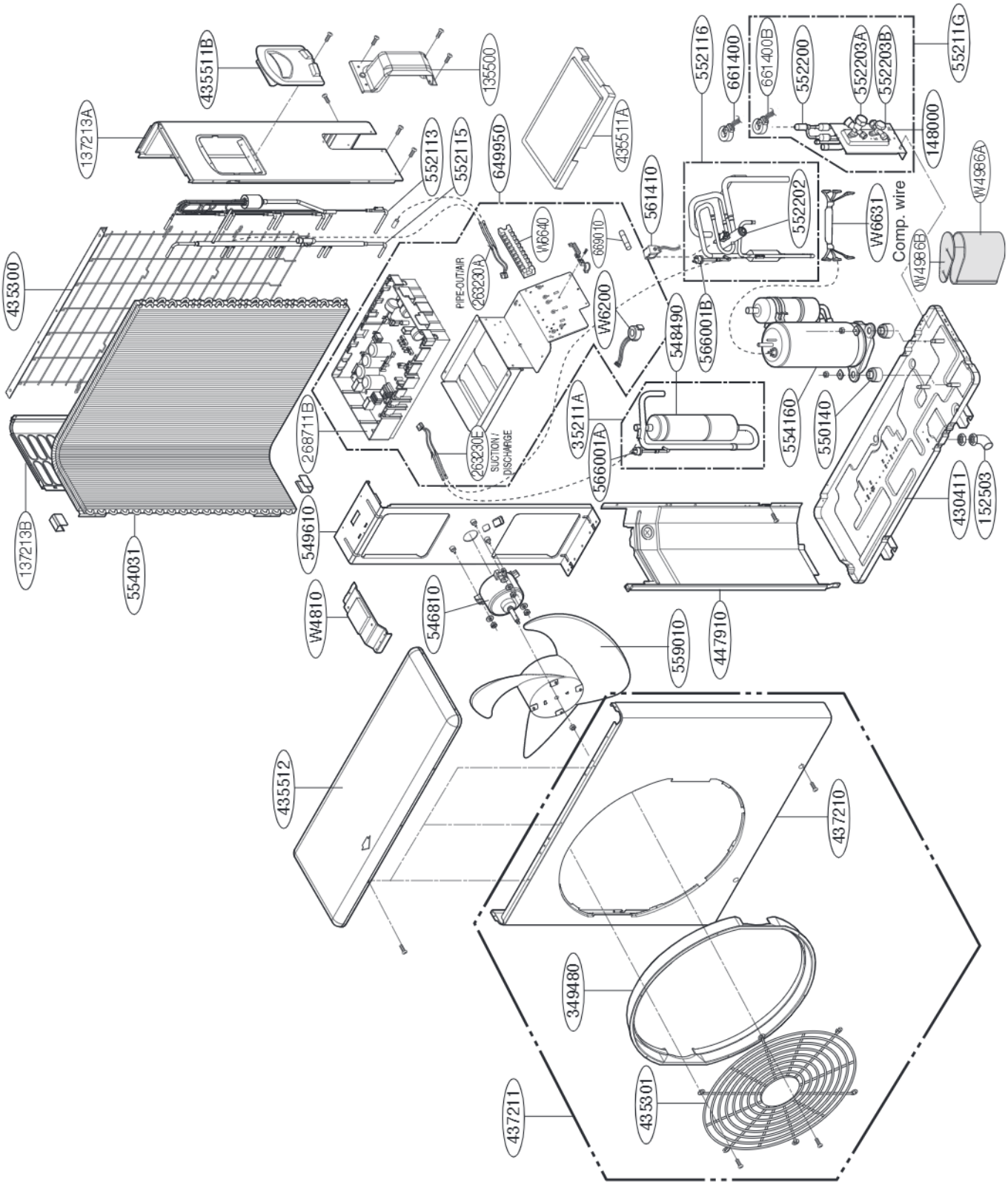

Copyright © 2012 - 2019 LG Electronics Inc.
All rights reserved. Only training and service purposes.