4. Exploded View

36

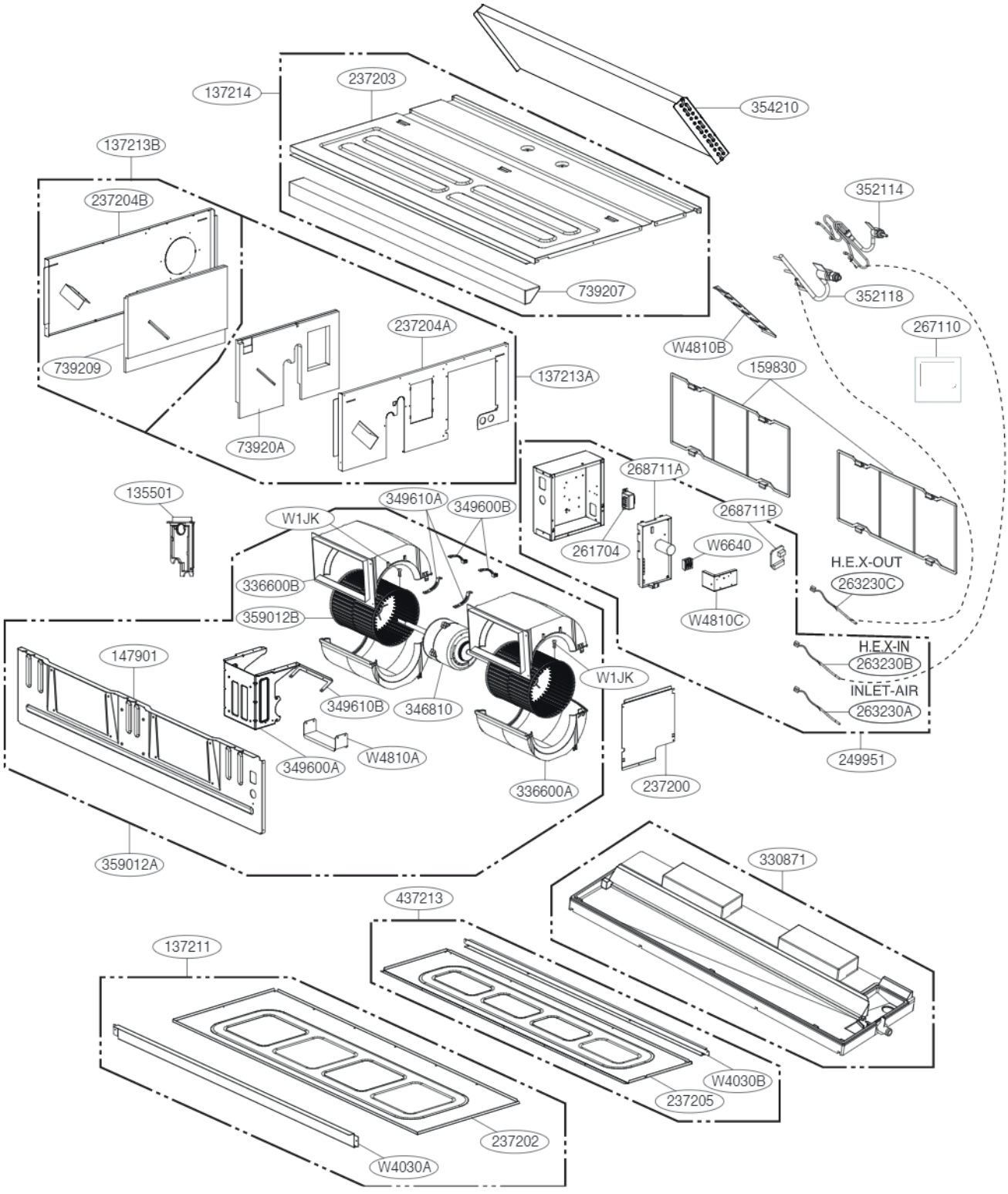

Location No.	Description	Sensor Information	Housing Color
263230A	Thermistor1(CN_ROOM)	Air-Inlet	Yellow
263230B	Thermistor2(CN_PIPE/IN)	Heat Exchanger In	White
263230C	Thermistor3(CN_PIPE/OUT)	Heat Exchanger Out	Red

Copyright © 2013 - 2021 LG Electronics Inc.
All rights reserved. Only training and service purposes.