5. Exploded View

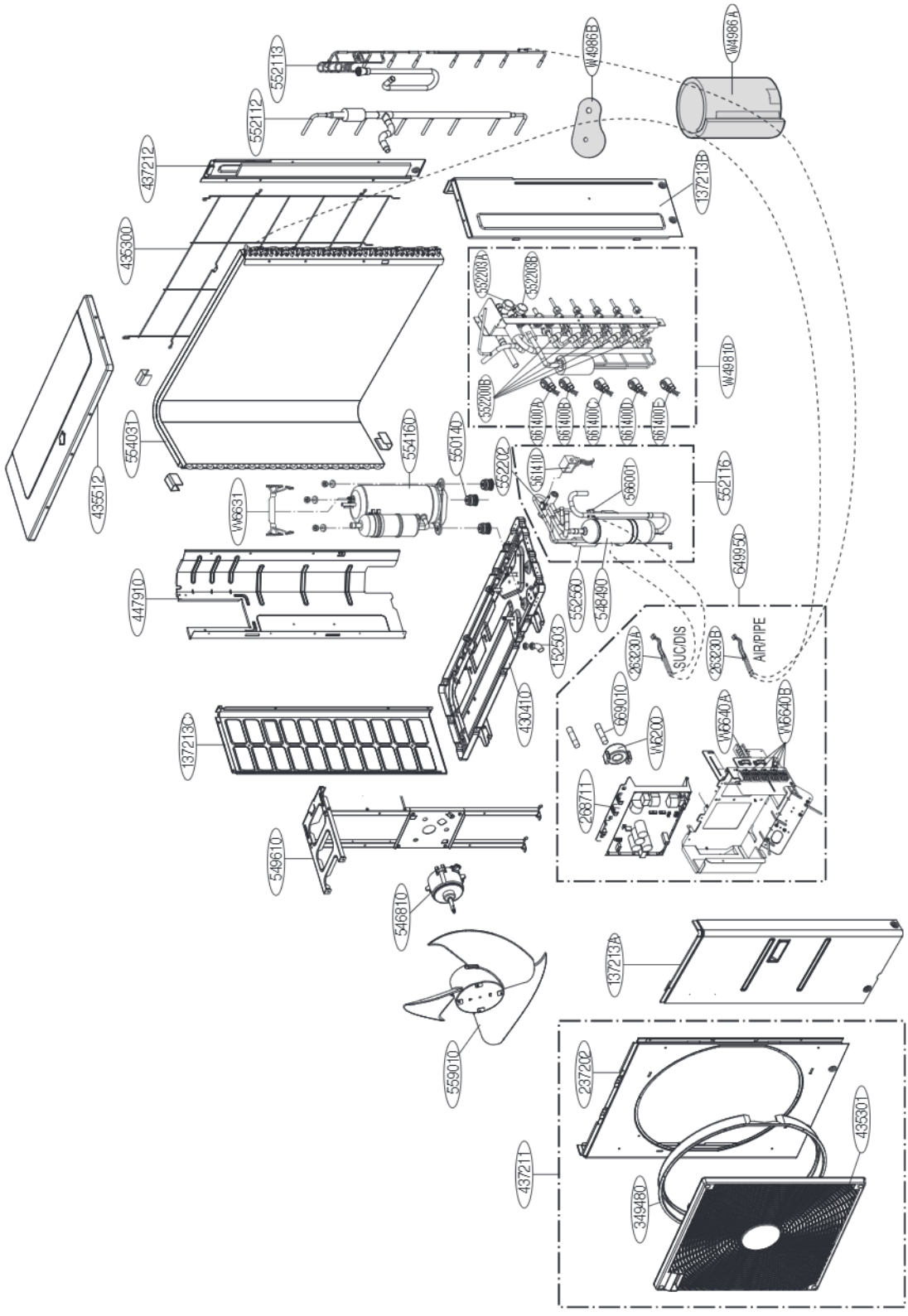

NOTE

* Please ensure GCSC since the replacement parts may be changed depending upon the buyer's request. Please check the correct parts in View RPL(Replacement Part List) on GCSC. (GCSC Website http://biz.Lgservice.com)

Copyright © 2012 - 2019 LG Electronics Inc.
All rights reserved. Only training and service purposes.