5.2 27k

• Condenser List

No.	Description	SVC LOC	Q'ty
1	Condenser Assembly,Bending	554031	1
2	Tube Assembly,Connector	352111	1
3	Tube Assembly,Manifold(Outdoor)	552115	1
4	Tube Assembly,Condenser(Out)	552113	1

• Condenser Assembly

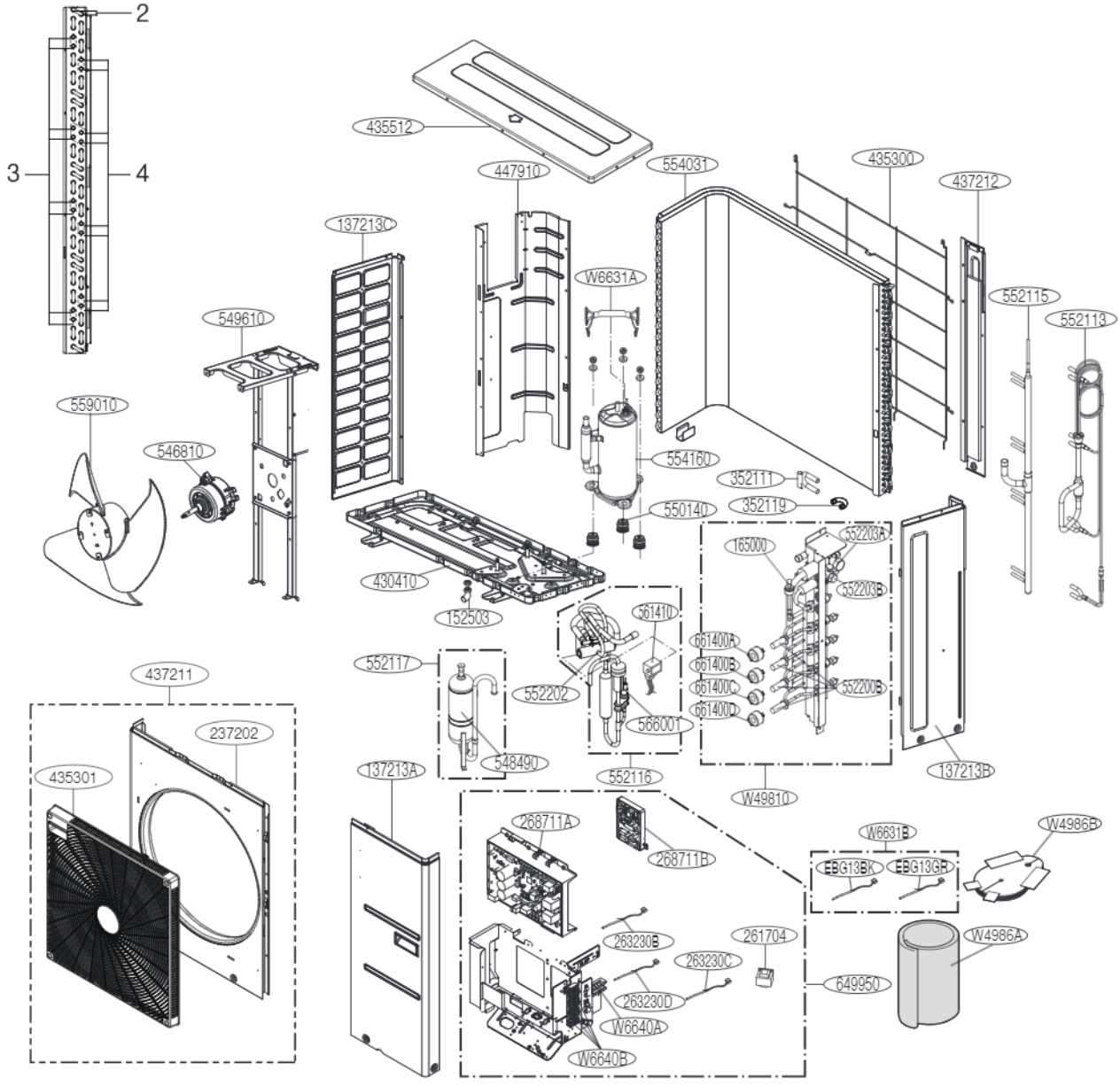

Location No.	Description	Sensor Information	Housing Color
EBG13BK	Thermisther1(CN-DISCHARGE)	Discharge Pipe	Black
EBG13GR	Thermisther2(CN-SUCTION)	Suction Pipe	Green
263230B	Thermisther3(CN-C/PIPE)	Cond Out Pipe	Violet
263230C	Thermisther4(CN-MID)	Cond Middle Pipe	Brown
263230D	Thermisther5(CN-AIR)	Air	Yellow
165000	Pressure Sensor(CN-H/PRESS)	Pressure Sensor	Red

Copyright © 2017 - 2021 LG Electronics Inc.
All rights reserved. Only training and service purposes.