Evaluation Only
Created with Solid Edge
Copyright 2005 - 2024 Siemens PLM Ltd.

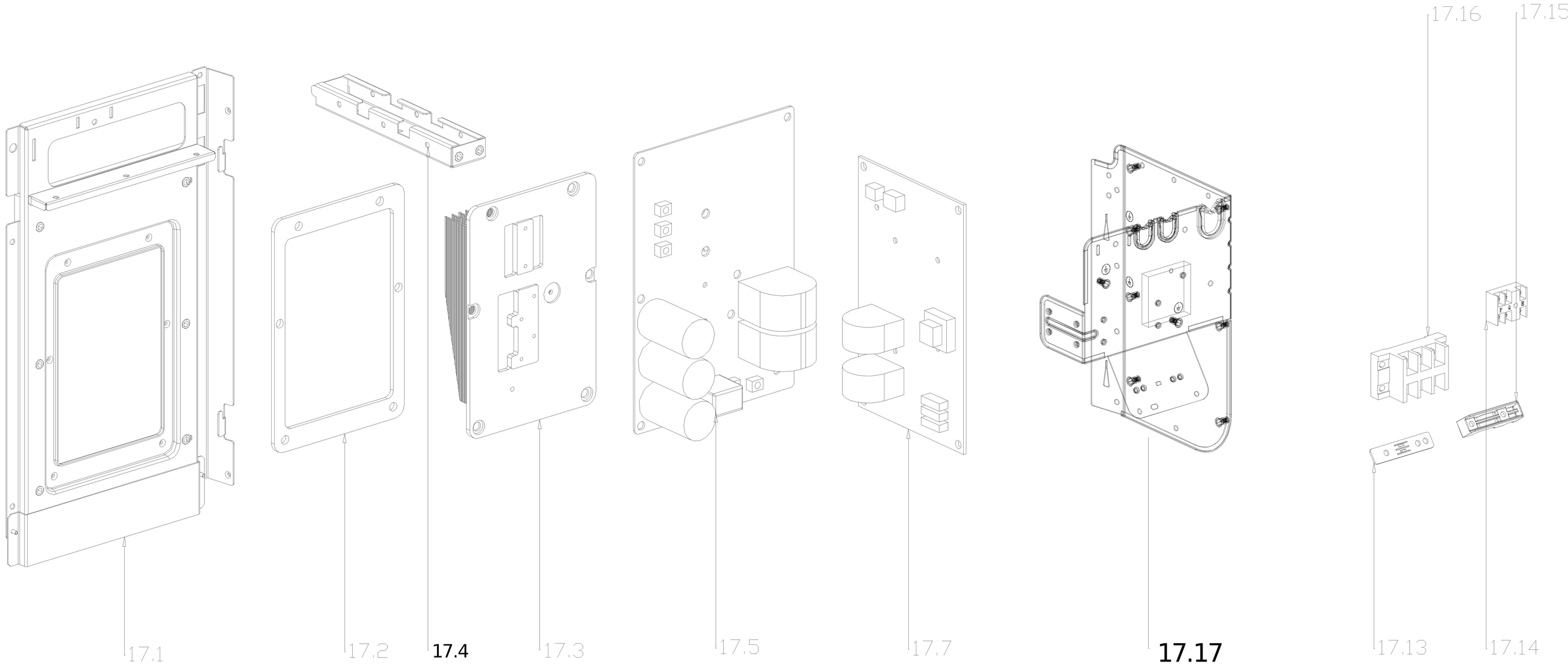

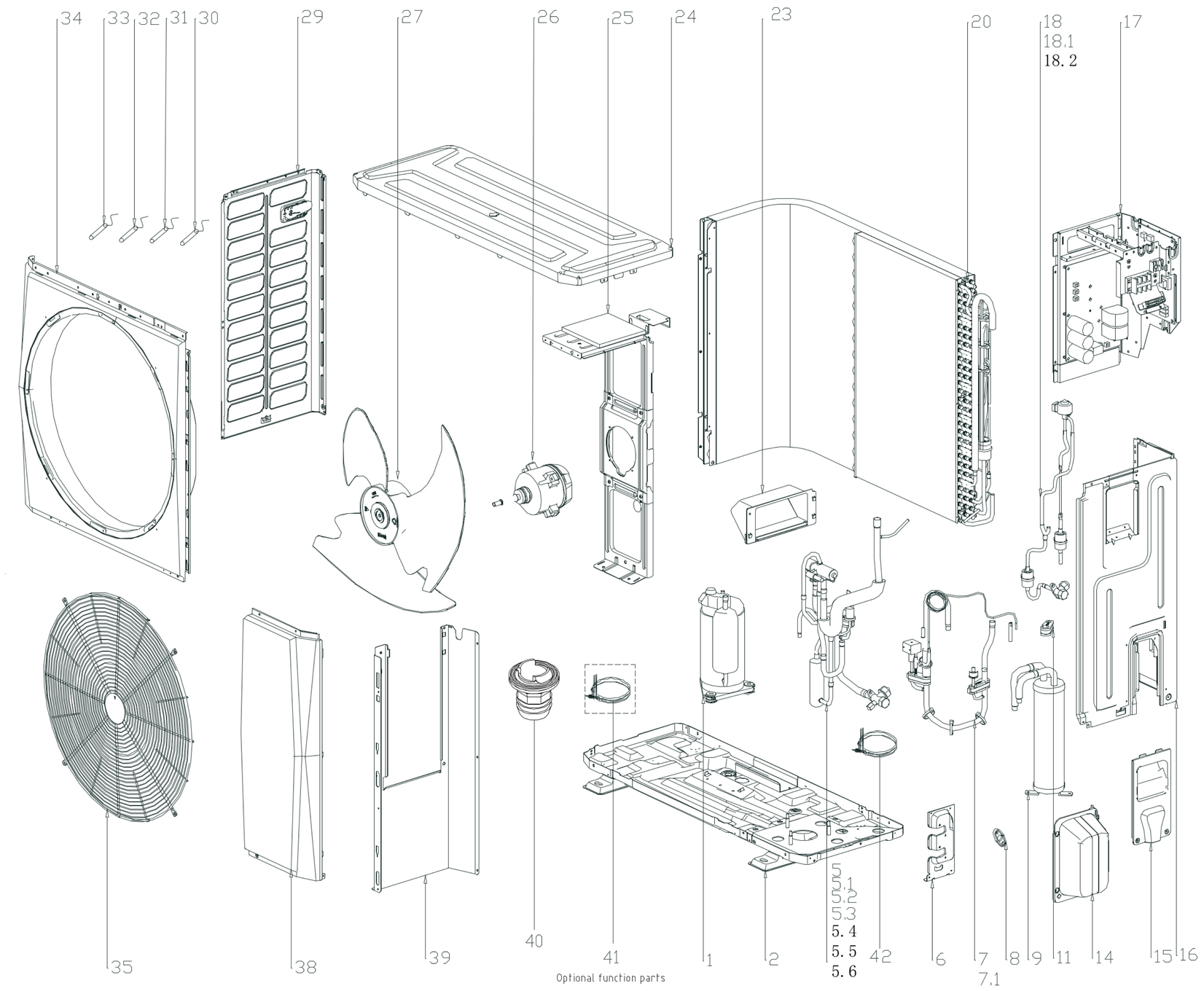
34
33
32
31
30
29
27
26
25
24
23
20
18
18.1
18.2
17
35
38
39
40
41
1
2
5
5.1
5.2
5.3
5.4
5.5
5.6
42
6
7
7.1
8
9
11
14
15
16
Optional function parts