TM_MULTI_R32_3D INV_EU_S_NA_2512

MULTI SPLIT TYPE
R32 INVERTER CONTROL

TECHNICAL MANUAL

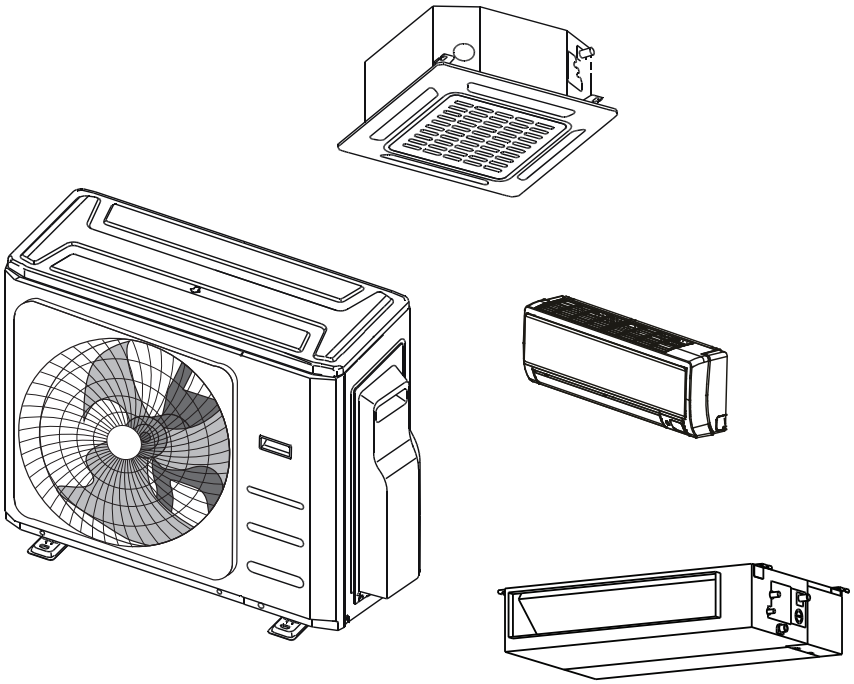

Table of Contents

Page

Table of Contents

Page

Specifications

Contents

1. Model Reference

Refer to the following table to determine the specific indoor and outdoor unit model number of your purchased equipment.

Indoor Unit		Power Supply
A6 Duct Type	MTIU-07HWFNX-QRD0W	1Phase, 220-240V~, 50Hz
	MTIU-07HWFNX-QRD0W(GA)	
	MTIU-09HWFNX-QRD0W(GA)	
	MTIU-09HWFNX-QRD0W	
	MTIU-12HWFNX-QRD0W	
	MTIU-12HWFNX-QRD0W(GA)	
	MTIU-18HWFNX-QRD0W(GA)	
	MTIU-18HWFNX-QRD0W	
A7 Duct Type	MTJ-07HWFNX-QRD1W(GA)	
	MTJ-09HWFNX-QRD1W(GA)	
	MTJ-12HWFNX-QRD1W(GA)	
	MTJ-18HWFNX-QRD1W(GA)	
	MTJ-24HWFNX-QRD1W(GA)	
Compact Cassette Type	MCA3I-07HRFNX-QRD0	
	MCA3U-07HRFNX-QRD0W(GA)	
	MCA3U-09HRFNX-QRD0W(GA)	
	MCA3I-09HRFN8-QRD0	
	MCA3U-12HRFNX-QRD0W	
	MCA3U-12HRFNX-QRD0W(GA)	
	MCA3U-18HRFNX-QRD0W(GA)	
	MCA3U-18HRFNX-QRD0W	
New Compact Cassette Type	MCA4U-07HRFNX-QRD1W(GA)	
	MCA4U-09HRFNX-QRD1W(GA)	
	MCA4U-12HRFNX-QRD1W(GA)	
	MCA4U-18HRFNX-QRD1W(GA)	
Console Type	MFA2U-09HRFNX-QRD0W(GA)	
	MFA2U-12HRFNX-QRD0W(GA)	
	MFA2U-17HRFNX-QRD0W(GA)	
New 4-way Cassette Type	MCD1-24HRFNX-QRD0W(GA)	

Indoor Unit		Power Supply
Wall mounted Type- Forest	MSAFBU-07HRDNX-QRD0GW	1Phase, 220-240V~, 50Hz
	MSAFBU-09HRDN8-QRD0GW	
	MSAFAU-09HRFN8-QRD1GW	
	MSAFBU-12HRDN8-QRD0GW	
	MSAFBU-12HRFN8-QRD1GW	
	MSAFCU-18HRFN8-QRD0GW	
	MSAFDU-24HRFN8-QRD0GW	
Wall mounted Type-Aurora	MSABAU-09HRFN8-QRD0GW	
	MSABBU-12HRFN8-QRD0GW	
	MSABDU-18HRFN8-QRD0GW	
	MSABEU-24HRFN8-QRD0GW	
Wall mounted Type-All Easy	MSAEBU-09HRFN8-QRD6GW	
	MSAEBU-12HRFN8-QRD0GW	
	MSAECU-18HRFN8-QRD0GW	
	MSAEDU-24HRFN8-QRD0GW	
Wall mounted Type-XTREME	MSAGAU-09HRFNX-QRD0GW	
	MSAGBU-09HRFN8-QRD1GW(GA)	
	MSAGBU-12HRFNX-QRD0GW	
	MSAGBU-12HRFN8-QRD1GW(GA)	
	MSAGCU-18HRFNX-QRD0GW	
	MSAGDU-24HRFN8-QRD0GW	
Wall mounted Type-BREEZELESS	MSFAAU-09HRFN8-QRD6GW	
	MSFAAU-12HRFN8-QRD6GW	
Wall mounted Type-BREEZELESS E	MSCB1BU -12HRFN8-QRD1GW	
	MSCB1BU -09HRFN8-QRD1GW	
	MSCB1CU-18HRFN8-QRD1GW	
	MSCB1DU-24HRFN8-QRD1GW	

Indoor Unit		Power Supply
Wall mounted Type-GLORY PRO	MSGPAU-07HRFN8-QRD1GW	1Phase, 220-240V~, 50Hz
	MSGPAU-09HRFN8-QRD6GW	
	MSGPAU-09HRFN8-QRD1GW	
	MSGPBU-12HRFN8-QRD6GW	
	MSGPBU-12HRFN8-QRD1GW	
	MSGPCU-18HRFN8-QRD6GW	
	MSGPCU-18HRFN8-QRD1GW	
	MSGPDU-24HRFN8-QRD6GW	
	MSGPDU-24HRFN8-QRD1GW	

Universal Outdoor Unit	Power Supply
M2OG-14HFN8-Q	1Phase, 220-240V~, 50Hz
M2OH-14HFN8-Q	
M2OC-18HFN8-Q	
M2OD-18HFN8-Q	
M2OE-18HFN8-Q	
M2OF-18HFN8-Q	
M3OA-18HFN8-Q	
M3OA-18HFN8-Q(HRU)	
M3OF-21HFN8-Q	
M3OG-21HFN8-Q	
M3OE-27HFN8-Q	
M3OF-27HFN8-Q	
M3OA-27HFN8-Q	
M3OB-27HFN8-Q	
M3OC-27HFN8-Q	
M4OA-24HFN8-Q	
M4OA-27HFN8-Q(HRU)	
M4OB-27HFN8-Q(HRU)	
M4OE-28HFN8-Q	
M4OB-36HFN8-Q	
M4OC-36HFN8-Q	
M5OD-42HFN8-Q	
M5OE-42HFN8-Q	

2. Functions

Functions / Model	A6 Duct Type	A7 Duct Type	Compact Cassette Type	New Compact Cassette Type	Console Type
Standard filter	O	O	●	●	●
Flange	O	O(9k/12k) ●(18k/24k)	X	X	X
Healthy filter	X	X	X	X	●
Drainage pump	O	O	●	●	X
IDU auxiliary electric heater	X	X	X	X	x
Infrared wired controller (KJR-12B, KJR-90A)	●	X	O	O	O
Infrared wired controller (120L)	O	●	O	O	O
120M/120N(4-core/4-core+wifi)	O	O	X	O	O
120M/120N(2-core/2-core+wifi)	O	O	X	O	O
120M/120N(2+4-core+wifi)	O	O	O	O	O
485 wired controller (KJR-120C, KJR-120G2)	O	O	O	O	O
2 cores non-polarity wired controller (KJR-120G,KJR-120X)	O	O	O	O	O
Wifi	O	O	O	O	O
XYE port for central controller	●	●	●	●	O
Alarm output terminal	●	●	●	●	O
Remote on/off terminal	●	●	●	●	O
Golden Fin(Outdoor unit)	●	●	●	●	●

Note:

●: Standard

O: Optional

X: Not available

Functions / Model	All Easy	Aurora	Forest	XTREME	BREEZELESS	Glory Pro	BREEZELESS E
High Density Filter	●	●	●	●	●	●	●
Cold Catalyst Filter	●	●	●	●	●	●	●
Fire Proof	●	●	●	●	●	●	●
Turbo	●	●	●	●	●	●	●
Sleep	●	●	●	●	●	●	●
Auto-restart	●	●	●	●	●	●	●
Timer	●	●	●	●	●	●	●
super ionizer	● (9k~18k)/ O(24k)	X	X	O	X	O	●
horizontal louver auto swing	●	●	●	●	●	●	●
2 ways piping connection	●	●	●	●	×	●	×
H-shaped installation plate	X	●	●	●	×	×	×
Monolithic installation plate	O	O	O	O	●	O	O
louver position memory function	●	●	●	●	●	●	●
follow me	O	O	O	O	●	●	●
Remote on/off terminal	O	O	X	O	X	O	X
Alarm output terminal	O	X	X	O	X	O	X
XYE port for centrol control&weekly timer	O	O	X	O	X	O	X
wired controller(simplex KJR-12B,etc.)	O	O	O	O	O	O	O
WIFI	O	O	O	O	●	O	●
Golden Fin(Outdoor unit)	●	●	●	●	●	●	●

Note:

●: Standard

O: Optional

X: Not available

3. General Specifications

Indoor model			MTIU-07HWFNX-QRD0W	MTIU-09HWFNX-QRD0W	MTIU-12HWFNX-QRD0W	MTIU-18HWFNX-QRD0W
Power supply (Indoor)		V- Ph-Hz	220~240-1-50	220~240-1-50	220~240-1-50	220~240-1-50
Cooling	Capacity	Btu/h	7000	9000	12000	18000
	Input	W	170	180	185	200
	Current	A	1.0	1.1	1.1	1.3
Heating	Capacity	Btu/h	8000	10000	13000	19000
	Input	W	170	180	185	200
	current	A	1.0	1.1	1.1	1.3
Indoor fan motor	Model		ZKFN-55-8-22	ZKFN-55-8-22	ZKFN-55-8-22	ZKFN-160-8-1-2
	Qty		1	1	1	1
	Input	W	130.0	130.0	130.0	90.0
	Capacitor	uF	/	/	/	/
	Speed(Hi/Mi/Lo)	r/min	1080/920/790	1080/920/790	1170/1030/850	1650/1300/1000
Indoor coil	a.Number of rows	3.0	3.0	3	3	3
	b.Tube pitch(a)x row pitch(b)	mm	21x13.37	21x13.37	21x13.37	21x13.37
	c.Fin spacing	mm	1.4	1.4	1.4	1.4
	d.Fin Type (code)		Hydrophilic aluminum(Golden)	Hydrophilic aluminum(Golden)	Hydrophilic aluminum(Golden)	Hydrophilic aluminum(Golden)
	e.Tube outside dia.and Type	mm	Φ7,Inner groove tube	Φ7,Inner groove tube	Φ7,Inner groove tube	Φ7,Inner groove tube
	f.Coil length x height x width	mm	526x210x40.11	526x210x40.11	526x210x40.11	695x252x40.11
	g.Number of circuits		4	4	4	4
Indoor air flow (Hi/Mi/Lo)		m3/h	500/340/230	500/340/230	600/480/300	790/650/480
ESP	Rated	Pa	25	25	25	25
	Range	Pa	0-40	0-40	0-60	0-100
Indoor sound pressure level (Hi/Mi/Lo)		dB(A)	40/34.5/27.5	40/34.5/27.5	40/34.5/27.5	41.5/38/33
Indoor sound power level		dB(A)	58	58	59	59
Indoor unit	Dimension(W*D*H)	mm	700x506x200	700x506x200	700x506x200	880x674x210
	Packing (W*D*H)	mm	860x540x275	860x540x275	860x540x275	1070x725x280
	Net/Gross weight	kg	18/22	18/22	18/22	23/29
Design pressure		MPa	4.3/1.7	4.3/1.7	4.3/1.7	4.3/1.7
Drainage water pipe dia.		mm	ODΦ25	ODΦ25	ODΦ25	ODΦ25
Refrigerant piping	Liquid side/ Gas side	mm(inch)	Φ6.35/Φ9.52(1/4"/3/8")	Φ6.35/Φ9.52(1/4"/3/8")	Φ6.35/Φ9.52(1/4"/3/8")	Φ6.35/Φ12.7(1/4"/1/2")
Controller			Wired Control	Wired Control	Wired Control	Wired control
Operation temperature		°C	17~30	17~30	17~30	17~30
Room temperature	Cooling	°C	17~32	17~32	17~32	17~32
	Heating	°C	0~30	0~30	0~30	0~30

Notes:

1) Capacities are based on the following conditions:

Cooling(T1): - Indoor Temperature 27°C(80.6°F) DB /19 °C(66.2°F) WB
-Outdoor Temperature 35 °C(95°F) DB /24 °C(75.2°F) WB
-Interconnecting Piping Length 5m
- Level Difference of Zero.

Heating: - Indoor Temperature 20°C(68°F) DB / 15°C(59°F) WB
-Outdoor Temperature 7°C(44.6°F) DB / 6°C(42.8°F) WB
- Interconnecting Piping Length 5 m
- Level Difference of Zero.

2) Capacities are Net Capacities.

3) Due to our policy of innovation some specifications may be changed without notification.

4) TDB Summer Outdoor: 35°C; TWB Summer Outdoor: 21,4°C; TDB Winter Outdoor: -0.8°C; RH Winter Outdoor: 90%.

Indoor model			MTIU-07HWFNX-QRD0W(GA)	MTIU-09HWFNX-QRD0W(GA)	MTIU-12HWFNX-QRD0W(GA)	MTIU-18HWFNX-QRD0W(GA)
Power supply (Indoor)		V- Ph-Hz	220~240-1-50	220~240-1-50	220~240-1-50	220~240-1-50
Cooling	Capacity	Btu/h	7000	9000	12000	18000
	Input	W	170	180	185	200
	Current	A	1.0	1.1	1.1	1.3
Heating	Capacity	Btu/h	8000	10000	13000	19000
	Input	W	170	180	185	200
	current	A	1.0	1.1	1.1	1.3
Indoor fan motor	Model		ZKFN-55-8-22	ZKFN-55-8-22	ZKFN-55-8-22-1	ZKFN-160-8-1-2
	Qty		1	1	1	1
	Input	W	130.0	130.0	130	90
	Capacitor	uF	-	-	0	/
	Speed(Hi/Mi/Lo)	r/min	1080/920/790	1080/920/790	1256/384	1650/1300/1000
Indoor coil	a.Number of rows	3.0	3.0	3.0	3	3
	b.Tube pitch(a)x row pitch(b)	mm	21x13.37	21x13.37	21x13.37	21x13.37
	c.Fin spacing	mm	1.4	1.4	1.4	1.4
	d.Fin Type (code)		Hydrophilic aluminum(Golden)	Hydrophilic aluminum(Golden)	Hydrophilic aluminum	Hydrophilic aluminum
	e.Tube outside dia.and Type	mm	Φ7,Inner groove tube	Φ7,Inner groove tube	Φ7,Inner groove tube	Φ7,Inner groove tube
	f.Coil length x height x width	mm	526x210x40.11	526x210x40.11	526x210x40.11	695x252x40.11
	g.Number of circuits		4	4	4	4
Indoor air flow (Hi/Mi/Lo)		m3/h	500/340/230	500/340/230	600/480/300	911/706.3/515.2
ESP	Rated	Pa	25	25	25	25
	Range	Pa	0-40	0-40	0-60	0-100
Indoor sound pressure level (Hi/Mi/Lo)		dB(A)	40/34.5/27.5	40/34.5/27.5	34.5/30.5/29/23	41/38/34/26
Indoor sound power level		dB(A)	58	58	57	58
Indoor unit	Dimension(W*D*H)	mm	700x450x200	700x450x200	700x506x200	880x674x210
	Packing (W*D*H)	mm	860x540x275	860x540x275	860x540x285	1070x725x280
	Net/Gross weight	kg	18/22	18/22	17.8/21.5	24.4/29.6
Design pressure		MPa	4.3/1.7	4.3/1.7	4.3/1.7	4.3/1.7
Drainage water pipe dia.		mm	ODΦ25	ODΦ25	ODΦ25	ODΦ25
Refrigerant piping	Liquid side/ Gas side	mm(inch)	Φ6.35/Φ9.52(1/4"/3/8")	Φ6.35/Φ9.52(1/4"/3/8")	Φ6.35/Φ9.52(1/4"/3/8")	Φ6.35/Φ12.7(1/4"/1/2")
Controller			Wired Control	Wired Control	Wired Control	Wired Control
Operation temperature		°C	17~30	17~30	17~30	17~30
Room temperature	Cooling	°C	17~32	17~32	17~32	17~32
	Heating	°C	0~30	0~30	0~30	0~30

Notes:

1) Capacities are based on the following conditions:

Cooling(T1): - Indoor Temperature 27°C(80.6°F) DB /19 °C(66.2°F) WB
-Outdoor Temperature 35 °C(95°F) DB /24 °C(75.2°F) WB
-Interconnecting Piping Length 5m
- Level Difference of Zero.

Heating: - Indoor Temperature 20°C(68°F) DB / 15°C(59°F) WB
-Outdoor Temperature 7°C(44.6°F) DB / 6°C(42.8°F) WB
- Interconnecting Piping Length 5 m
- Level Difference of Zero.

2) Capacities are Net Capacities.

3) Due to our policy of innovation some specifications may be changed without notification.

4) TDB Summer Outdoor: 35°C; TWB Summer Outdoor: 21,4°C; TDB Winter Outdoor: -0.8°C; RH Winter Outdoor: 90%.

Indoor model			MTJ-07HWFNX-QRD1W(GA)	MTJ-09HWFNX-QRD1W(GA)	MTJ-12HWFNX-QRD1W(GA)
Power supply (Indoor)		V- Ph-Hz	220~240-1-50	220~240-1-50	220~240-1-50
Cooling	Capacity	Btu/h	7000	9000	12000
	Input	W	88	88	91
	Current	A	0.8	0.8	0.8
Heating	Capacity	Btu/h	8000	10000	13000
	Input	W	88	88	91
	current	A	0.8	0.8	0.8
Indoor fan motor	Model		ZKFN-81-8-1	ZKFN-81-8-1	ZKFN-81-8-1
	Qty		1	1	1
	Input	W	113	113	113
	Capacitor	uF	-	-	-
	Speed(Hi/Mi/Lo)	r/min	1130/1047/965	1130/1047/965	1140/1052/965
Indoor coil	a.Number of rows	3.0	3	3	3
	b.Tube pitch(a)x row pitch(b)	mm	21x13.37	21x13.37	19.5*11.6
	c.Fin spacing	mm	1.4	1.4	1.3
	d.Fin Type (code)		Hydrophilic aluminum	Hydrophilic aluminum	Hydrophilic aluminum
	e.Tube outside dia.and Type	mm	Φ7,Inner groove tube	Φ7,Inner groove tube	Φ5,Inner groove tube
	f.Coil length x height x width	mm	525x210x40.11	525x210x40.11	525x214.5x23.2
	g.Number of circuits		3	3	5
Indoor air flow (Hi/Mi/Lo)		m3/h	620/540/450	620/540/450	660/570/470
ESP	Rated	Pa	25	25	25
	Range	Pa	0-80	0-80	0-100
Indoor sound pressure level (Hi/Mi/Lo)		dB(A)	40/34.5/27.5	40/34.5/27.5	41/38/34
Indoor sound power level		dB(A)	57	57	58
Indoor unit	Dimension(W*D*H)	mm	700x506x200	700x506x200	700x506x200
	Packing (W*D*H)	mm	860x540x285	860x540x285	860x540x285
	Net/Gross weight	kg	16.6/19.8	16.6/19.8	16.6/19.8
Design pressure		MPa	4.3/1.7	4.3/1.7	4.3/1.7
Drainage water pipe dia.		mm	ODΦ25	ODΦ25	ODΦ25
Refrigerant piping	Liquid side/ Gas side	mm(inch)	Φ6.35/Φ9.52(1/4"/3/8")	Φ6.35/Φ9.52(1/4"/3/8")	Φ6.35/Φ9.52(1/4"/3/8")
Controller			Wired Control	Wired Control	Wired Control
Operation temperature		°C	16~30	16~30	16~30
Room temperature	Cooling	°C	16~32	16~32	16~32
	Heating	°C	0~30	0~30	0~30

Notes:

1) Capacities are based on the following conditions:

Cooling(T1): - Indoor Temperature 27°C(80.6°F) DB /19 °C(66.2°F) WB
-Outdoor Temperature 35 °C(95°F) DB /24 °C(75.2°F) WB
-Interconnecting Piping Length 5m
- Level Difference of Zero.

Heating: - Indoor Temperature 20°C(68°F) DB / 15°C(59°F) WB
-Outdoor Temperature 7°C(44.6°F) DB / 6°C(42.8°F) WB
- Interconnecting Piping Length 5 m
- Level Difference of Zero.

2) Capacities are Net Capacities.

3) Due to our policy of innovation some specifications may be changed without notification.

4) TDB Summer Outdoor: 35°C; TWB Summer Outdoor: 21,4°C; TDB Winter Outdoor: -0.8°C; RH Winter Outdoor: 90%.

Indoor model			MTJ-18HWFNX-QRD1W(GA)	MTJ-24HWFNX-QRD1W(GA)
Power supply (Indoor)		V- Ph-Hz	220~240-1-50	220~240-1-50
Cooling	Capacity	Btu/h	18000	24000
	Input	W	172	217
	Current	A	1.3	1.5
Heating	Capacity	Btu/h	19000	26000
	Input	W	172	217
	current	A	1.3	1.5
Indoor fan motor	Model		ZKFN-81-8-1	ZKFN-165-10-1L
	Qty		1	1
	Input	W	113	185
	Capacitor	uF	0	/
	Speed(Hi/Mi/Lo)	r/min	1140/1052/965	950/850/750
Indoor coil	a.Number of rows	3.0	3	3
	b.Tube pitch(a)x row pitch(b)	mm	19.5*11.6	19.5*11.6
	c.Fin spacing	mm	1.2	1.2
	d.Fin Type (code)		Hydrophilic aluminum	Hydrophilic aluminum
	e.Tube outside dia.and Type	mm	Φ5,Inner groove tube	Φ5,Inner groove tube
	f.Coil length x height x width	mm	525x351x34.8	825x351x34.8
	g.Number of circuits		6	9
Indoor air flow (Hi/Mi/Lo)		m3/h	900/780/650	1200/1000/700
ESP	Rated	Pa	25	25
	Range	Pa	0-160	0-160
Indoor sound pressure level (Hi/Mi/Lo)		dB(A)	41/38/34	33.5/32.5/31
Indoor sound power level		dB(A)	60	55
Indoor unit	Dimension(W*D*H)	mm	700x750x245	1000x750x245
	Packing (W*D*H)	mm	925x850x298	1225x860x304
	Net/Gross weight	kg	24.4/29	31.8/37.2
Design pressure		MPa	4.3/1.7	4.3/1.7
Drainage water pipe dia.		mm	ODΦ25	ODΦ25
Refrigerant piping	Liquid side/ Gas side	mm(inch)	Φ6.35/Φ12.7(1/4"/1/2")	Φ9.52/Φ15.9(3/8"/5/8")
Controller			Wired Control	Wired Control
Operation temperature		°C	17~30	17~30
Room temperature	Cooling	°C	17~32	17~32
	Heating	°C	0~30	0~30

Notes:

1) Capacities are based on the following conditions:

Cooling(T1): - Indoor Temperature 27°C(80.6°F) DB /19 °C(66.2°F) WB
-Outdoor Temperature 35 °C(95°F) DB /24 °C(75.2°F) WB
-Interconnecting Piping Length 5m
- Level Difference of Zero.

Heating: - Indoor Temperature 20°C(68°F) DB / 15°C(59°F) WB
-Outdoor Temperature 7°C(44.6°F) DB / 6°C(42.8°F) WB
- Interconnecting Piping Length 5 m
- Level Difference of Zero.

2) Capacities are Net Capacities.

3) Due to our policy of innovation some specifications may be changed without notification.

4) TDB Summer Outdoor: 35°C; TWB Summer Outdoor: 21,4°C; TDB Winter Outdoor: -0.8°C; RH Winter Outdoor: 90%.

Indoor model			MCA3U-07HRFNX-QRD0W(GA)	MCA3U-09HRFNX-QRD0W(GA)	MCA3U-12HRFNX-QRD0W(GA)	MCA3U-18HRFNX-QRD0W(GA)
Power supply (Indoor)		V- Ph-Hz	220~240-1-50	220~240-1-50	220~240-1-50	220~240-1-50
Cooling	Capacity	Btu/h	7000	9000	12000	18000
	Input	W	40	40	45	45
	Current	A	0.18	0.18	0.2	0.2
Heating	Capacity	Btu/h	8000	10000	13000	19000
	Input	W	40	40	45	45
	current	A	0.18	0.18	0.2	0.2
Indoor fan motor	Model		ZKFP-46-8-1	ZKFP-46-8-1	ZKFP-46-8-1	ZKFP-46-8-1
	Qty		1	1	1	1
	Input	W	45	45	45	45
	Capacitor	uF	-	-	/	/
	Speed(Hi/Mi/Lo)	r/min	600/520/460	600/520/460	700/600/500	752/664/576
Indoor coil	a.Number of rows	3.0	1.0	1.0	2.0	2.0
	b.Tube pitch(a)x row pitch(b)	mm	21x13.37	21x13.37	21x13.37	21x13.37
	c.Fin spacing	mm	1.3	1.3	1.3	1.3
	d.Fin Type (code)		Hydrophilic aluminum(Golden)	Hydrophilic aluminum(Golden)	Hydrophilic aluminum	Hydrophilic aluminum
	e.Tube outside dia.and Type	mm	Φ7,Inner groove tube	Φ7,Inner groove tube	Φ7,Inner groove tube	Φ7,Inner groove tube
	f.Coil length x height x width	mm	1380x210x13.37	1380x210x13.37	1300x210x26.74+ 1360x210x26.74	1360x210x26.74
	g.Number of circuits		2	2	4	4
Indoor air flow (Hi/Mi/Lo)		m3/h	580/500/450	580/500/450	620/510/420	720/620/500
Indoor sound pressure level (Hi/Mi/Lo)		dB(A)	38/33/29	38/33/29	41/36/33/25.5	43/39.5/35.5/29
Indoor sound power level		dB(A)	53	53	56	57
Indoor unit	Dimension(W*D*H)(body)	mm	570x570x260	570x570x260	570x570x260	570x570x260
	Packing (W*D*H)(body)	mm	662x662x317	662x662x317	662x662x317	662x662x317
	Dimension(W*D*H)(panel)	mm	647x647x50	647x647x50	647x647x50	647x647x50
	Packing (W*D*H)(panel)	mm	715x715x123	715x715x123	715x715x123	715x715x123
	Net/Gross weight(body)	kg	14.5/17.3	14.5/17.3	16.3/20.4	16/20.6
	Net/Gross weight(panel)	kg	2.5/4.5	2.5/4.5	2.5/4.5	2.5/4.5
Design pressure		MPa	4.3/1.7	4.3/1.7	4.3/1.7	4.3/1.7
Drainage water pipe dia.		mm	ODΦ25	ODΦ25	ODΦ25	ODΦ25
Refrigerant piping	Liquid side/ Gas side	mm(inch)	Φ6.35/Φ9.52(1/4"/3/8")	Φ6.35/Φ9.52(1/4"/3/8")	Φ6.35/Φ9.52(1/4"/3/8")	Φ6.35/Φ12.7(1/4"/1/2")
Controller			Remote Control	Remote Control	Remote Control	Remote Control
Operation temperature		°C	17~30	17~30	17~30	17~30
Room temperature	Cooling	°C	17~32	17~32	17~32	17~32
	Heating	°C	0~30	0~30	0~30	0~30

Notes:

1) Capacities are based on the following conditions:

Cooling(T1): - Indoor Temperature 27°C(80.6°F) DB /19 °C(66.2°F) WB
-Outdoor Temperature 35 °C(95°F) DB /24 °C(75.2°F) WB
-Interconnecting Piping Length 5m
- Level Difference of Zero.

Heating: - Indoor Temperature 20°C(68°F) DB / 15°C(59°F) WB
-Outdoor Temperature 7°C(44.6°F) DB / 6°C(42.8°F) WB
- Interconnecting Piping Length 5 m
- Level Difference of Zero.

2) Capacities are Net Capacities.

3) Due to our policy of innovation some specifications may be changed without notification.

4) TDB Summer Outdoor: 35°C; TWB Summer Outdoor: 21,4°C; TDB Winter Outdoor: -0.8°C; RH Winter Outdoor: 90%.

Indoor model			MCA3I-07HRFNX-QRD0	MCA3I-09HRFN8-QRD0	MCA3U-12HRFNX-QRD0W	MCA3U-18HRFNX-QRD0W
Power supply (Indoor)		V- Ph-Hz	220~240-1-50	220~240-1-50	220~240-1-50	220~240-1-50
Cooling	Capacity	Btu/h	7000	9000	12000	18000
	Input	W	40	40	40	102
	Current	A	0.18	0.18	0.18	0.44
Heating	Capacity	Btu/h	7500	10000	14000	18500
	Input	W	40	40	40	102
	current	A	0.18	0.18	0.18	0.44
Indoor fan motor	Model		ZKFP-46-8-1	ZKFP-46-8-1	ZKFP-46-8-1	ZKFP-46-8-1
	Old Model		WZDK46-38G	WZDK46-38G	WZDK46-38G	WZDK46-38G
	Qty		1	1	1	1
	Input	W	45	45	45	45
	Capacitor	uF	-	-	-	/
	Speed(Hi/Mi/Lo)	r/min	600/520/460	600/520/460	700/580/500	720/625/540
Indoor coil	a.Number of rows	3.0	1.0	1.0	2	2
	b.Tube pitch(a)x row pitch(b)	mm	21x13.37	21x13.37	21x13.37	21x13.37
	c.Fin spacing	mm	1.3	1.3	1.3	1.3
	d.Fin Type (code)		Hydrophilic aluminum	Hydrophilic aluminum(Golden)	Hydrophilic aluminum(Golden)	Hydrophilic aluminum(Golden)
	e.Tube outside dia.and Type	mm	Φ7,Inner groove tube	Φ7,innergroove tube	Φ7,innergroove tube	Φ7,innergroove tube
	f.Coil length x height x width	mm	1380x210x13.37	1380x210x13.37	1360x210x26.74	1360x210x26.74
	g.Number of circuits		2	2	4	4
Indoor air flow (Hi/Mi/Lo)		m3/h	540/460/400	540/460/400	650/550/460	680/560/500
Indoor sound pressure level (Hi/Mi/Lo)		dB(A)	37.0/33.0/31.5	38/33/29	41/37/34	44/42/41
Indoor sound power level		dB(A)	51	53	58	56
Indoor unit	Dimension (W x Dx H)(body)	mm	570x570x260	570x570x260	570x570x260	570x570x260
	Packing (W x Dx H)(body)	mm	662x662x317	662x662x317	662x662x317	662x662x317
	Dimension (W x Dx H)(panel)	mm	647x647x50	647x647x50	647x647x50	647x647x50
	Packing (W x Dx H)(panel)	mm	715x715x123	715x715x123	715x715x123	715x715x123
	Net/Gross weight(body)	kg	14.5/17.3	14.5/17.3	14.4/17.2	16.1/18.9
	Net/Gross weight(panel)	kg	2.5/4.5	2.5/4.5	2.5/4.5	2.5/4.5
Design pressure		MPa	4.3/1.7	4.3/1.7	4.3/1.7	4.3/1.7
Drainage water pipe dia.		mm	ODΦ25	ODΦ25	ODΦ25	ODΦ25
Refrigerant piping	Liquid side/ Gas side	mm(inch)	Φ6.35/Φ9.52(1/4"/3/8")	Φ6.35/Φ9.52(1/4"/3/8")	Φ6.35/Φ9.52(1/4"/3/8")	Φ6.35/Φ12.7(1/4"/1/2")
Controller			Remote Control	Remote Control	Remote Control	Remote control
Operation temperature		°C	17~30	17~30	17~30	17~30
Room tempera-ture	Cooling	°C	17~32	17~32	17~32	17~32
	Heating	°C	0~30	0~30	0~30	0~30

Notes:

1) Capacities are based on the following conditions:

Cooling(T1): - Indoor Temperature 27°C(80.6°F) DB /19 °C(66.2°F) WB
-Outdoor Temperature 35 °C(95°F) DB /24 °C(75.2°F) WB
-Interconnecting Piping Length 5m
- Level Difference of Zero.

Heating: - Indoor Temperature 20°C(68°F) DB / 15°C(59°F) WB
-Outdoor Temperature 7°C(44.6°F) DB / 6°C(42.8°F) WB
- Interconnecting Piping Length 5 m
- Level Difference of Zero.

2) Capacities are Net Capacities.

3) Due to our policy of innovation some specifications may be changed without notification.

4) TDB Summer Outdoor: 35°C; TWB Summer Outdoor: 21,4°C; TDB Winter Outdoor: -0.8°C; RH Winter Outdoor: 90%.

Indoor model			MCA4U-07HRFNX-QRD1W(GA)	MCA4U-09HRFNX-QRD1W(GA)	MCA4U-12HRFNX-QRD1W(GA)	MCA4U-18HRFNX-QRD1W(GA)
Power supply (Indoor)		V- Ph-Hz	220~240-1-50	220~240-1-50	220~240-1-50	220~240-1-50
Cooling	Capacity	Btu/h	7000	9000	12000	18000
	Input	W	25	25	40	45
	Current	A	0.6	0.6	0.7	0.75
Heating	Capacity	Btu/h	8000	10000	13000	19000
	Input	W	25	25	40	45
	current	A	0.6	0.6	0.7	0.75
Indoor fan motor	Model		ZKFN-45-8-2	ZKFN-45-8-2	ZKFN-45-8-2	ZKFN-45-8-2
	Qty		1	1	1	1
	Input	W	45	45	45	45
	Capacitor	uF	-	-	-	/
	Speed(Hi/Mi/Lo)	r/min	600/520/460	600/520/460	800/750/700	800/750/700
Indoor coil	a.Number of rows	3.0	1	1	2	2
	b.Tube pitch(a)x row pitch(b)	mm	21x13.37	21x13.37	21x13.37	21x13.37
	c.Fin spacing	mm	1.3	1.3	1.3	1.3
	d.Fin Type (code)		Hydrophilic aluminum	Hydrophilic aluminum(Golden)	Hydrophilic aluminum(Golden)	Hydrophilic aluminum(Golden)
	e.Tube outside dia.and Type	mm	Φ7,Inner groove tube	Φ7,innergroove tube	Φ7,innergroove tube	Φ7,innergroove tube
	f.Coil length x height x width	mm	1375*210*13.37	1375*210*13.37	1375*210*13.37+ 1305*210*13.37	1375*210*13.37+ 1305*210*13.37
	g.Number of circuits		2	2	4	4
Indoor air flow (Hi/Mi/Lo)		m3/h	500/460/400	500/460/400	620/520/330	660/540/300
Indoor sound pressure level (Hi/Mi/Lo)		dB(A)	37.0/35.5/33.0	37.0/35.5/33.0	42/38.5/31.5	44/41/31.5
Indoor sound power level		dB(A)	52	52	55	59
Indoor unit	Dimension (W x Dx H)(body)	mm	570x570x245	570x570x245	570x570x245	570x570x245
	Packing (W x Dx H)(body)	mm	715x640x295	715x640x295	715x640x295	715x640x295
	Dimension (W x Dx H)(panel)	mm	620x620x50	620x620x50	620x620x50	620x620x50
	Packing (W x Dx H)(panel)	mm	715x700x115	715x700x115	715x700x115	715x700x115
	Net/Gross weight(body)	kg	14.6/17.5	14.6/17.5	16.1/18.8	16.2/19
	Net/Gross weight(panel)	kg	2.7/4.3	2.7/4.3	2.7/4.3	2.7/4.3
Design pressure		MPa	4.3/1.7	4.3/1.7	4.3/1.7	4.3/1.7
Drainage water pipe dia.		mm	ODΦ25	ODΦ25	ODΦ25	ODΦ25
Refrigerant piping	Liquid side/ Gas side	mm(inch)	Φ6.35/Φ9.52(1/4"/3/8")	Φ6.35/Φ9.52(1/4"/3/8")	Φ6.35/Φ9.52(1/4"/3/8")	Φ6.35/Φ12.7(1/4"/1/2")
Controller			Remote Control	Remote Control	Remote Control	Remote control
Operation temperature		°C	16~30	16~30	16~30	16~30
Room tempera-ture	Cooling	°C	16~32	16~32	16~32	16~32
	Heating	°C	0~30	0~30	0~30	0~30

Notes:

1) Capacities are based on the following conditions:

Cooling(T1): - Indoor Temperature 27°C(80.6°F) DB /19 °C(66.2°F) WB
-Outdoor Temperature 35 °C(95°F) DB /24 °C(75.2°F) WB
-Interconnecting Piping Length 5m
- Level Difference of Zero.

Heating: - Indoor Temperature 20°C(68°F) DB / 15°C(59°F) WB
-Outdoor Temperature 7°C(44.6°F) DB / 6°C(42.8°F) WB
- Interconnecting Piping Length 5 m
- Level Difference of Zero.

2) Capacities are Net Capacities.

3) Due to our policy of innovation some specifications may be changed without notification.

4) TDB Summer Outdoor: 35°C; TWB Summer Outdoor: 21,4°C; TDB Winter Outdoor: -0.8°C; RH Winter Outdoor: 90%.

Indoor model			MCD1-24HRFNX-QRD0W(GA)
Power supply (Indoor)		V- Ph-Hz	220~240-1-50
Cooling	Capacity	Btu/h	24000
	Input	W	1
	Current	A	0.51
Heating	Capacity	Btu/h	26000
	Input	W	1
	current	A	0.51
Indoor fan motor	Model		ZKFN-45-8-1
	Qty		1
	Input	W	64
	Capacitor	uF	-
	Speed(Hi/Mi/Lo)	r/min	608/552/496
Indoor coil	a.Number of rows	3.0	2.0
	b.Tube pitch(a)x row pitch(b)	mm	21x13.37
	c.Fin spacing	mm	1.3
	d.Fin Type (code)		Hydrophilic aluminum
	e.Tube outside dia.and Type	mm	Φ7,Inner groove tube
	f.Coil length x height x width	mm	2155x168x26.74
	g.Number of circuits		4
Indoor air flow (Hi/Mi/Lo)		m3/h	1247/1118/992
Indoor sound pressure level (Hi/Mi/Lo)		dB(A)	45/42.5/37/27.5
Indoor sound power level		dB(A)	59
Indoor unit	Dimension (W x Dx H)(body)	mm	830x830x205
	Packing (W x Dx H)(body)	mm	910x910x250
	Dimension (W x Dx H)(panel)	mm	21.6/25.4
	Packing (W x Dx H)(panel)	mm	950x950x55
	Net/Gross weight(body)	kg	1035x1035x90
	Net/Gross weight(panel)	kg	6/9
Design pressure		MPa	4.3/1.7
Drainage water pipe dia.		mm	ODΦ25
Refrigerant piping	Liquid side/ Gas side	mm(inch)	Φ6.35/Φ15.9(1/4"/5/8")
Controller			Remote Control
Operation temperature		°C	16~30
Room temperature	Cooling	°C	16~32
	Heating	°C	0~30

Notes:

1) Capacities are based on the following conditions:

Cooling(T1): - Indoor Temperature 27°C(80.6°F) DB /19 °C(66.2°F) WB
-Outdoor Temperature 35 °C(95°F) DB /24 °C(75.2°F) WB
-Interconnecting Piping Length 5m
- Level Difference of Zero.

Heating: - Indoor Temperature 20°C(68°F) DB / 15°C(59°F) WB
-Outdoor Temperature 7°C(44.6°F) DB / 6°C(42.8°F) WB
- Interconnecting Piping Length 5 m
- Level Difference of Zero.

2) Capacities are Net Capacities.

3) Due to our policy of innovation some specifications may be changed without notification.

4) TDB Summer Outdoor: 35°C; TWB Summer Outdoor: 21,4°C; TDB Winter Outdoor: -0.8°C; RH Winter Outdoor: 90%.

Indoor model			MFA2U-09HRFNX-QRD0W(GA)	MFA2U-12HRFNX-QRD0W(GA)	MFA2U-17HRFNX-QRD0W(GA)
Power supply (Indoor)		V- Ph-Hz	220~240-1-50	220~240-1-50	220~240-1-50
Cooling	Capacity	Btu/h	9000	12000	17000
	Input	W	25	30	35
	Current	A	0.38	0.4	0.42
Heating	Capacity	Btu/h	10000	13000	18000
	Input	W	25	30	35
	current	A	0.38	0.4	0.42
Indoor fan motor	Model		ZKFP-13-8-136 +ZKFP-13-8-104	ZKFP-13-8-136+ZKFP-13-8-104	ZKFP-13-8-136+ZKFP-13-8-104
	Qty		1+1	1+1	1+1
	Output	W	13+13	13+13	13+13
	Capacitor	uF	/	/	/
	Speed(Hi/Mi/Lo)	r/min	992/884/776	992/884/776	1100/1000/900
Indoor coil	a.Number of rows	3.0	2	2	2
	b.Tube pitch(a)x row pitch(b)	mm	21x13.37	21x13.37	21x13.37
	c.Fin spacing	mm	1.3	1.3	1.3
	d.Fin Type (code)		Hydrophilic aluminum(Golden)	Hydrophilic aluminum(Golden)	Hydrophilic aluminum(Golden)
	e.Tube outside dia.and Type	mm	Φ7,Inner groove tube	Φ7,Inner groove tube	Φ7,Inner groove tube
	f.Coil length x height x width	mm	550x378x26.74	550x378x26.74	550x378x26.74
	g.Number of circuits		2	2	2
Indoor air flow (Hi/Mi/Lo)		m3/h	600/510/400	650/580/490	780/690/600
Indoor sound pressure level (Hi/Mi/Lo)		dB(A)	37/34/27	37/34/27	41/38/32
Indoor sound power level		dB(A)	54.0	54	55
Indoor unit	Dimension(W*D*H)	mm	794x200x621	794x200x621	794x200x621
	Packing (W*D*H)	mm	865x280x719	865x280x719	865x280x719
	Net/Gross weight	kg	14.9/18.8	14.9/18.8	14.9/18.8
Design pressure		MPa	4.3/1.7	4.3/1.7	4.3/1.7
Drainage water pipe dia.		mm	ODΦ16	ODΦ16	ODΦ16
Refrigerant piping	Liquid side/ Gas side	mm(inch)	Φ6.35/Φ9.52(1/4"/3/8")	Φ6.35/Φ9.52(1/4"/3/8")	Φ6.35/Φ12.7(1/4"/1/2")
Controller			Remote Control	Remote Control	Remote Control
Operation temperature		°C	16~30	16~30	16~30
Room temperature	Cooling	°C	16~32	16~32	16~32
	Heating	°C	0~30	0~30	0~30

Notes:

1) Capacities are based on the following conditions:

Cooling(T1): - Indoor Temperature 27°C(80.6°F) DB /19 °C(66.2°F) WB
-Outdoor Temperature 35 °C(95°F) DB /24 °C(75.2°F) WB
-Interconnecting Piping Length 5m
- Level Difference of Zero.

Heating: - Indoor Temperature 20°C(68°F) DB / 15°C(59°F) WB
-Outdoor Temperature 7°C(44.6°F) DB / 6°C(42.8°F) WB
- Interconnecting Piping Length 5 m
- Level Difference of Zero.

2) Capacities are Net Capacities.

3) Due to our policy of innovation some specifications may be changed without notification.

4) TDB Summer Outdoor: 35°C; TWB Summer Outdoor: 21,4°C; TDB Winter Outdoor: -0.8°C; RH Winter Outdoor: 90%.

Indoor model			MSAFBU-07HRDNX-QRD0GW	MSAFBU-09HRDN8-QRD0GW	MSAFBU-12HRDN8-QRD0GW
Power supply (Indoor)		V- Ph-Hz	220~240-1-50	220~240-1-50	220~240-1-50
Cooling	Capacity	Btu/h	7000	9000	12000
	Input	W	20	20	20
	Current	A	0.09	0.09	0.09
Heating	Capacity	Btu/h	8000	10000	13000
	Input	W	20	20	20
	current	A	0.09	0.09	0.09
Indoor fan motor	Model		YKFG-13-4-38L	YKFG-13-4-38L	YKFG-13-4-38L
	Input	W	40	40	40
	Capacitor	uF	1.2	1.2	1.2
	Speed(Hi/Mi/Lo)	r/min	1030/850/700	1030/850/700	1130/950/750
Indoor coil	a.Number of rows	3.0	2.0	2.0	2.0
	b.Tube pitch(a)x row pitch(b)	mm	19.5x11.6	19.5x11.6	19.5x11.6
	c.Fin spacing	mm	1.2	1.2	1.2
	d.Fin Type (code)		Hydrophilic aluminum	Hydrophilic aluminum	Hydrophilic aluminum
	e.Tube outside dia.and Type	mm	Φ5,innergroove tube	Φ5,innergroove tube	Φ5,innergroove tube
	f.Coil length x height x width	mm	595x273x23.2	595x273x23.2	595x273x23.2
	g.Number of circuits		4	4	4
Indoor air flow (Hi/Mi/Lo)		m3/h	520/460/340	520/460/340	600/500/360
Indoor sound pressure level (Hi/Mi/Lo)		dB(A)	40/30/26	40/30/26	40/34/26
Indoor sound power level		dB(A)	54	53	53
Indoor unit	Dimension(W*D*H)	mm	805x194x285	805x194x285	805x194x285
	Packing (W*D*H)	mm	870x270x360	870x270x360	870x270x360
	Net/Gross weight	Kg	7.5/9.7	7.5/9.7	7.5/9.7
Design pressure		MPa	4.3/1.7	4.3/1.7	4.3/1.7
Refrigerant piping	Liquid side/ Gas side	mm(inch)	Φ6.35/Φ9.52(1/4"/3/8")	Φ6.35/Φ9.52(1/4"/3/8")	Φ6.35/Φ9.52(1/4"/3/8")
Controller		Wired Control	Remote Control	Remote Control	Remote Control
Operation temperature		°C	17~30	17~30	17~30
Room tempera-ture	Cooling	°C	17~32	17~32	17~32
	Heating	°C	0~30	0~30	0~30

Notes:

1) Capacities are based on the following conditions:

Cooling(T1): - Indoor Temperature 27°C(80.6°F) DB /19 °C(66.2°F) WB
-Outdoor Temperature 35 °C(95°F) DB /24 °C(75.2°F) WB
-Interconnecting Piping Length 5m
- Level Difference of Zero.

Heating: - Indoor Temperature 20°C(68°F) DB / 15°C(59°F) WB
-Outdoor Temperature 7°C(44.6°F) DB / 6°C(42.8°F) WB
- Interconnecting Piping Length 5 m
- Level Difference of Zero.

2) Capacities are Net Capacities.

3) Due to our policy of innovation some specifications may be changed without notification.

4) TDB Summer Outdoor: 35°C; TWB Summer Outdoor: 21,4°C; TDB Winter Outdoor: -0.8°C; RH Winter Outdoor: 90%.

Indoor model			MSAFCU-18HRFN8-QRD0GW	MSAFDU-24HRFN8-QRD0GW	MSAFAU-09HRFN8-QRD1GW	MSAFBU-12HRFN8-QRD1GW
Power supply (Indoor)		V- Ph-Hz	220~240-1-50	220~240-1-50	220~240-1-50	220~240-1-50
Cooling	Capacity	Btu/h	18000	24000	9000	12000
	Input	W	34	62	30	30
	Current	A	0.15	0.28	0.14	0.14
Heating	Capacity	Btu/h	19000	25000	10000	13000
	Input	W	34	62	30	30
	current	A	0.15	0.28	0.14	0.14
Indoor fan motor	Model		ZKFP-30-8-3	ZKFP-58-8-1	ZKFP-30-8-357L	ZKFP-30-8-357L
	Input	W	36	58.0	43	43
	Capacitor	uF	/	/	/	/
	Speed(Hi/Mi/Lo)	r/min	1130 / 900 / 800	1150 / 1000 / 850	1100/900/750	1130/950/750
Indoor coil	a.Number of rows	3.0	2.0	2.0	2	2
	b.Tube pitch(a)x row pitch(b)	mm	21x13.37	21x13.37	19.5x11.6	19.5x11.6
	c.Fin spacing	mm	1.2	1.3	1.2	1.2
	d.Fin Type (code)		Hydrophilic aluminum	Hydrophilic aluminum	Hydrophilic aluminum	Hydrophilic aluminum
	e.Tube outside dia.and Type	mm	Φ7,Inner groove tube	Φ7,Inner groove tube	Φ5,Inner groove tube	Φ5,Inner groove tube
	f.Coil length x height x width	mm	750x294x26.74	780x315x26.74	510x78x23.2+510x97.5x23.2+510x78x23.2	595x78x23.2+595x117x23.2+595x78x23.2
	g.Number of circuits		3	4	3	4
Indoor air flow (Hi/Mi/Lo)		m3/h	840/680/540	980/817/662	435/333/259	530/430/310
Indoor sound pressure level (Hi/Mi/Lo)		dB(A)	44/37/30	44.5/42/34.5	37/32/25/21.5	39.5/35.5/25/21.5
Indoor sound power level		dB(A)	55	59	50	54
Indoor unit	Dimension(W*D*H)	mm	957x213x302	1040x220x327	715x194x285	805x194x285
	Packing (W*D*H)	mm	1035x295x380	1120x405x310	780x270x365	870x270x365
	Net/Gross weight	Kg	10/13	12.3/15.8	6.7/8.8	7.3/9.5
Design pressure		MPa	4.3/1.7	4.3/1.7	4.3/1.7	4.3/1.7
Refrigerant piping	Liquid side/ Gas side	mm(inch)	Φ6.35/Φ12.7(1/4"/1/2")	Φ9.52/Φ15.9(3/8"/5/8")	Φ6.35/Φ9.52(1/4"/3/8")	Φ6.35/Φ9.52(1/4"/3/8")
Controller		Wired Control	Remote control	Remote control	Remote control	Remote control
Operation temperature		°C	17~30	17~30	17~30	17~30
Room tempera-ture	Cooling	°C	17~32	17~32	17~32	17~32
	Heating	°C	0~30	0~30	0~30	0~30

Notes:

1) Capacities are based on the following conditions:

Cooling(T1): - Indoor Temperature 27°C(80.6°F) DB /19 °C(66.2°F) WB
-Outdoor Temperature 35 °C(95°F) DB /24 °C(75.2°F) WB
-Interconnecting Piping Length 5m
- Level Difference of Zero.

Heating: - Indoor Temperature 20°C(68°F) DB / 15°C(59°F) WB
-Outdoor Temperature 7°C(44.6°F) DB / 6°C(42.8°F) WB
- Interconnecting Piping Length 5 m
- Level Difference of Zero.

2) Capacities are Net Capacities.

3) Due to our policy of innovation some specifications may be changed without notification.

4) TDB Summer Outdoor: 35°C; TWB Summer Outdoor: 21,4°C; TDB Winter Outdoor: -0.8°C; RH Winter Outdoor: 90%.

Indoor model			MSABAU-09HRFN8-QRD0GW	MSABBU-12HRFNX-QRD0GW	MSABDU-18HRFNX-QRD0GW	MSABEU-24HRFNX-QRD0GW
Power supply (Indoor)		V- Ph-Hz	220~240-1-50	220~240-1-50	220~240-1-50	220~240-1-50
Cooling	Capacity	Btu/h	9000	12000	18000	25000
	Input	W	24	24	34	62
	Current	A	0.11	0.11	0.15	0.28
Heating	Capacity	Btu/h	10000	13000	19000	26000
	Input	W	24	24	34	62
	current	A	0.11	0.11	0.15	0.28
Indoor fan motor	Model		ZKFP-20-8-6-7	ZKFP-20-8-6-7	ZKFP-30-8-3	ZKFP-58-8-1
	Input	W	50.0	50.0	36	58
	Capacitor	uF	/	/	/	/
	Speed(Hi/Mi/Lo)	r/min	1150/850/700	1100/1000/700	1100/800/700	1100/900/700
Indoor coil	a.Number of rows	3.0	2	2	2	2
	b.Tube pitch(a)x row pitch(b)	mm	21x13.37	21x13.37	21x13.37	21x13.37
	c.Fin spacing	mm	1.3	1.3	1.2	1.3
	d.Fin Type (code)		Hydrophilic aluminum	Hydrophilic aluminium	Hydrophilic aluminium	Hydrophilic aluminium
	e.Tube outside dia. and Type	mm	Φ7,Inner groove tube	Φ7,innergroove tube	Φ7,innergroove tube	Φ7,innergroove tube
	f.Coil length x height x width	mm	525x84x13.37+ 525x105x26.74	605x294x26.74	750x336x26.74	820x336x26.74
	g.Number of circuits		2	2	4	4
Indoor air flow (Hi/Mi/Lo)		m3/h	416/309/230	539/478/294	750/505/420	1050/750/560
Indoor sound pressure level (Hi/Mi/Lo)		dB(A)	39/31/23	38/30/22	42/33/27	46/40/30
Indoor sound power level		dB(A)	54	56	58	62
Indoor unit	Dimension(W*D*H)	mm	722x187x290	802x189x297	965x215x319	1080x226x335
	Packing (W*D*H)	mm	790x270x370	875x285x375	1045x305x405	1155x415x315
	Net/Gross weight	Kg	7.3/9.7	8.2/10.7	9/12.2	12/15.2
Design pressure		MPa	4.3/1.7	4.3/1.7	4.3/1.7	4.3/1.7
Refrigerant piping	Liquid side/ Gas side	mm(inch)	Φ6.35/Φ9.52(1/4"/3/8")	Φ6.35/Φ9.52(1/4"/3/8")	Φ6.35/Φ12.7(1/4"/1/2")	Φ9.52/Φ15.9(3/8"/5/8")
Controller		Wired Control	Remote Control	Remote Control	Remote Control	Remote Control
Operation temperature		°C	17~30	17~30	17~30	17~30
Room tem-perature	Cooling	°C	17~32	17~32	17~32	17~32
	Heating	°C	0~30	0~30	0~30	0~30

Notes:

1) Capacities are based on the following conditions:

Cooling(T1): - Indoor Temperature 27°C(80.6°F) DB /19 °C(66.2°F) WB
-Outdoor Temperature 35 °C(95°F) DB /24 °C(75.2°F) WB
-Interconnecting Piping Length 5m
- Level Difference of Zero.

Heating: - Indoor Temperature 20°C(68°F) DB / 15°C(59°F) WB
-Outdoor Temperature 7°C(44.6°F) DB / 6°C(42.8°F) WB
- Interconnecting Piping Length 5 m
- Level Difference of Zero.

2) Capacities are Net Capacities.

3) Due to our policy of innovation some specifications may be changed without notification.

4) TDB Summer Outdoor: 35°C; TWB Summer Outdoor: 21,4°C; TDB Winter Outdoor: -0.8°C; RH Winter Outdoor: 90%.

Indoor model			MSAEBU-09HRFN8-QRD6GW	MSAEBU-12HRFNX-QRD0GW	MSAECU-18HRFNX-QRD0GW	MSAEDU-24HRFNX-QRD0GW
Power supply (Indoor)		V- Ph-Hz	220~240-1-50	220~240-1-50	220~240-1-50	220~240-1-50
Cooling	Capacity	Btu/h	9000	12000	18000	25000
	Input	W	24	24	34	62
	Current	A	0.11	0.11	0.15	0.28
Heating	Capacity	Btu/h	10000	14000	19000	26000
	Input	W	24	24	34	62
	current	A	0.11	0.11	0.15	0.28
Indoor fan motor	Model		ZKFP-20-8-6-7	ZKFP-20-8-6-7	ZKFP-30-8-3-10	ZKFP-58-8-1-5
	Input	W	50	50	36	58
	Capacitor	uF	/	/	/	/
	Speed(Hi/Mi/Lo)	r/min	1000/800/700	1100/900/750	1150/1000/850	1150/1000/800
Indoor coil	a.Number of rows	3.0	2.0	2.0	2.0	2.0
	b.Tube pitch(a)x row pitch(b)	mm	21x13.37	21x13.37	21x13.37	21x13.37
	c.Fin spacing	mm	1.2	1.2	1.2	1.3
	d.Fin Type (code)		Hydrophilic aluminum	Hydrophilic aluminum	Hydrophilic aluminum	Hydrophilic aluminum
	e.Tube outside dia. and Type	mm	Φ7,Inner groove tube	Φ7,Inner groove tube	Φ7,Inner groove tube	Φ7,Inner groove tube
	f.Coil length x height x width	mm	598x189x26.74+ 598x84x26.74	598x189x26.74+ 598x84x26.74	750x210x26.74+ 750x126x26.74	820x189x26.74+ 820x126x26.74
	g.Number of circuits		3	3	4	5
Indoor air flow (Hi/Mi/Lo)		m3/h	480/365/305	531/414/327	800/710/540	980/860/640
Indoor sound pressure level (Hi/Mi/Lo)		dB(A)	39.5/25.5/22.5	41.5/28/23	44.5/28.5/24	45.5/35.5/27
Indoor sound power level		dB(A)	53	54	57	59
Indoor unit	Dimension(W*D*H)	mm	805x193x302	805x193x302	964x222x325	1106x232x342
	Packing (W*D*H)	mm	875x375x290	875x375x290	1045x405x310	1195x420x320
	Net/Gross weight	Kg	8.7/11.4	8.7/11.4	11.3/14.7	14.2/18.1
Design pressure		MPa	4.3/1.7	4.3/1.7	4.3/1.7	4.3/1.7
Refrigerant piping	Liquid side/ Gas side	mm(inch)	Φ6.35/Φ9.52(1/4"/3/8")	Φ6.35/Φ9.52(1/4"/3/8")	Φ6.35/Φ12.7(1/4"/1/2")	Φ9.52/Φ15.9(3/8"/5/8")
Controller		Wired Control	Remote Control	Remote Control	Remote Control	Remote Control
Operation temperature		°C	17~30	17~30	17~30	17~30
Room tem-perature	Cooling	°C	17~32	17~32	17~32	17~32
	Heating	°C	0~30	0~30	0~30	0~30

Notes:

1) Capacities are based on the following conditions:

Cooling(T1): - Indoor Temperature 27°C(80.6°F) DB /19 °C(66.2°F) WB
-Outdoor Temperature 35 °C(95°F) DB /24 °C(75.2°F) WB
-Interconnecting Piping Length 5m
- Level Difference of Zero.

Heating: - Indoor Temperature 20°C(68°F) DB / 15°C(59°F) WB
-Outdoor Temperature 7°C(44.6°F) DB / 6°C(42.8°F) WB
- Interconnecting Piping Length 5 m
- Level Difference of Zero.

2) Capacities are Net Capacities.

3) Due to our policy of innovation some specifications may be changed without notification.

4) TDB Summer Outdoor: 35°C; TWB Summer Outdoor: 21,4°C; TDB Winter Outdoor: -0.8°C; RH Winter Outdoor: 90%.

Indoor model			MSAGAU-09HRFNX-QRD0GW	MSAGBU-09HRFN8-QRD1GW(GA)	MSAGBU-12HRFNX-QRD0GW
Power supply (Indoor)		V- Ph-Hz	220~240-1-50	220~240-1-50	220~240-1-50
Cooling	Capacity	Btu/h	9000	9000	12000
	Input	W	23	23	23
	Current	A	0.11	0.10	0.11
Heating	Capacity	Btu/h	10000	10000	13000
	Input	W	23	23	23
	current	A	0.11	0.10	0.11
Indoor fan motor	Model		ZKFP-20-8-6-7	ZKFP-13-8-4	ZKFP-13-8-4
	Input	W	50	18.2	18.2
	Capacitor	uF	/	/	/
	Speed(Hi/Mi/Lo)	r/min	1050//700	1050/450	1050//700
Indoor coil	a.Number of rows		2	2	2
	b.Tube pitch(a)x row pitch(b)	mm	21x13.37	21x13.37	21x13.37
	c.Fin spacing	mm	1.3	1.3	1.3
	d.Fin Type (code)		Hydrophilic aluminum	Hydrophilic aluminum	Hydrophilic aluminum
	e.Tube outside dia.and Type	mm	Φ7,Inner groove tube	Φ7,Inner groove tube	Φ7,Inner groove tube
	f.Coil length x height x width	mm	525x84x13.37+ 525x210x26.74	605x210x26.74+605x105x26.74	605x210x26.74+605x105x26.74
	g.Number of circuits		2	2	2
Indoor air flow (Hi/Mi/Lo)		m3/h	520/460/330	510/360/300	530/400/350
Indoor sound pressure level (Hi/Mi/Lo)		dB(A)	37/32/22	37/0/22	37.0/32.0/22.0
Indoor sound power level		dB(A)	54.0	56	56
Indoor unit	Dimension(W*D*H)	mm	726x210x291	835x295x208	835x208x295
	Packing (W*D*H)	mm	790x270x375	905x355x290	905x355x290
	Net/Gross weight	Kg	8.0/10.5	8.7/11.5	8.7/11.5
Design pressure		MPa	4.3/1.7	4.3/1.7	4.3/1.7
Refrigerant piping	Liquid side/ Gas side	mm(inch)	Φ6.35/Φ9.52(1/4"/3/8")	Φ6.35/Φ9.52(1/4"/3/8")	Φ6.35/Φ9.52(1/4"/3/8")
Controller		Wired Control	Remote Control	Remote Control	Remote Control
Operation temperature		°C	16~30	16~30	16~30
Room tempera-ture	Cooling	°C	16~32	16~32	16~32
	Heating	°C	0~30	0~30	0~30

Notes:

1) Capacities are based on the following conditions:

Cooling(T1): - Indoor Temperature 27°C(80.6°F) DB /19 °C(66.2°F) WB
-Outdoor Temperature 35 °C(95°F) DB /24 °C(75.2°F) WB
-Interconnecting Piping Length 5m
- Level Difference of Zero.

Heating: - Indoor Temperature 20°C(68°F) DB / 15°C(59°F) WB
-Outdoor Temperature 7°C(44.6°F) DB / 6°C(42.8°F) WB
- Interconnecting Piping Length 5 m
- Level Difference of Zero.

2) Capacities are Net Capacities.

3) Due to our policy of innovation some specifications may be changed without notification.

4) TDB Summer Outdoor: 35°C; TWB Summer Outdoor: 21,4°C; TDB Winter Outdoor: -0.8°C; RH Winter Outdoor: 90%.

Indoor model			MSAGBU-12HRFN8-QRD1GW(GA)	MSAGCU-18HRFNX-QRD0GW	MSAGDU-24HRFN8-QRD0GW	MSFAAU-12HRFN8-QRD6GW
Power supply (Indoor)		V- Ph-Hz	220~240-1-50	220~240-1-50	220~240-1-50	220~240-1-50
Cooling	Capacity	Btu/h	12000	18000	24000	12000
	Input	W	23	36	68	25
	Current	A	0.10	0.15	0.28	0.10
Heating	Capacity	Btu/h	13000	19000	25000	13000
	Input	W	23	34	62	25
	current	A	0.10	0.15	0.28	0.10
Indoor fan motor	Model		ZKFP-13-8-4	ZKFP-30-8-3	ZKFP-58-8-1	ZKFP-20-8-6-7
	Input	W	18.2	36.0	58.0	50
	Capacitor	uF	/	/	/	/
	Speed(Hi/Mi/Lo)	r/min	1100/900/750	1150/1000/850	1150/1000/850	1150/1000/650
Indoor coil	a.Number of rows	3.0	2	2	2	2
	b.Tube pitch(a)x row pitch(b)	mm	21x13.37	21x13.37	21x13.37	21x13.37
	c.Fin spacing	mm	1.3	1.2	1.3	1.3
	d.Fin Type (code)		Hydrophilic aluminum	Hydrophilic aluminum	Hydrophilic aluminum	Hydrophilic aluminum
	e.Tube outside dia. and Type	mm	Φ7,Inner groove tube	Φ7,Inner groove tube	Φ7,Inner groove tube	Φ7,Inner groove tube
	f.Coil length x height x width	mm	605x210x26.74+ 605x105x26.74	750x210x26.74+ 750x126x26.74	820x210x26.74+ 820x126x26.74	653x210x26.74+ 653x105x26.74
	g.Number of circuits		2	4	4	2
Indoor air flow (Hi/Mi/Lo)		m3/h	520/370/310	800/600/500	1090/770/610	620/520/400
Indoor sound pressure level (Hi/Mi/Lo)		dB(A)	38/33/22	41/37/31	46/37/34.5	620/520/400
Indoor sound power level		dB(A)	60	56	62	54
Indoor unit	Dimension(W*D*H)	mm	835x208x295	969x241x320	1083x244x336	940x193x325
	Packing (W*D*H)	mm	905x355x290	1045x315x405	1155x415x315	1055x385x290
	Net/Gross weight	Kg	8.7/11.3	11.2/14.6	13.6/17.3	10.6/13.8
Design pressure		MPa	4.3/1.7	4.3/1.7	4.3/1.7	4.3/1.7
Refrigerant piping	Liquid side/ Gas side	mm (inch)	Φ6.35/Φ9.52(1/4"/3/8")	Φ6.35/Φ12.7(1/4"/1/2")	Φ9.52/Φ15.9(3/8"/5/8")	Φ6.35/Φ9.52(1/4"/3/8")
Controller		Wired Con-trol	Remote Control	Remote Control	Remote Control	Remote Control
Operation temperature		°C	16~30	16~30	16~30	16~30
Room tem-perature	Cooling	°C	16~32	16~32	16~32	16~32
	Heating	°C	0~30	0~30	0~30	0~30

Notes:

1) Capacities are based on the following conditions:

Cooling(T1): - Indoor Temperature 27°C(80.6°F) DB /19 °C(66.2°F) WB
-Outdoor Temperature 35 °C(95°F) DB /24 °C(75.2°F) WB
-Interconnecting Piping Length 5m
- Level Difference of Zero.

Heating: - Indoor Temperature 20°C(68°F) DB / 15°C(59°F) WB
-Outdoor Temperature 7°C(44.6°F) DB / 6°C(42.8°F) WB
- Interconnecting Piping Length 5 m
- Level Difference of Zero.

2) Capacities are Net Capacities.

3) Due to our policy of innovation some specifications may be changed without notification.

4) TDB Summer Outdoor: 35°C; TWB Summer Outdoor: 21,4°C; TDB Winter Outdoor: -0.8°C; RH Winter Outdoor: 90%.

Indoor model			MSGPAU-09HRFN8-QRD6GW	MSGPBU-12HRFN8-QRD6GW	MSGPCU-18HRFN8-QRD6GW	MSGPDU-24HRFN8-QRD6GW
Power supply (Indoor)		V- Ph-Hz	220~240-1-50	220~240-1-50	220~240-1-50	220~240-1-50
Cooling	Capacity	Btu/h	9000	12000	17060	23884
	Input	W	23	23	36	68
	Current	A	0.48	0.48	0.45	0.84
Heating	Capacity	Btu/h	10000	13000	18425	24908
	Input	W	23	23	36	68
	current	A	0.48	0.48	0.45	0.84
Indoor fan motor	Model		ZKFP-30-8-357L	ZKFP-30-8-357L	ZKFP-35-10-188L	ZKFP-58-8-26L
	Input	W	42.9	42.9	55	88
	Capacitor	uF	/	/	/	/
	Speed(Hi/Mi/Lo)	r/min	1050/930//870	1000/880/820	1000/868/802	1050/910/840
Indoor coil	a.Number of rows	3.0	2	2	2	2
	b.Tube pitch(a)x row pitch(b)	mm	19.5x11.6	19.5x11.6	19.5x11.6	21x13.37
	c.Fin spacing	mm	1.3	1.3	1.3	1.3
	d.Fin Type (code)		Hydrophilic aluminum	Hydrophilic aluminum	Hydrophilic aluminum	Hydrophilic aluminum
	e.Tube outside dia. and Type	mm	Φ5,Inner groove tube	Φ5,Inner groove tube	Φ5,Inner groove tube	Φ7,Inner groove tube
	f.Coil length x height x width	mm	530x195x23.2+530x97.5x23.2	620x195x23.2+620x97.5x23.2	770x195x23.2+770x117x23.2	820x231x26.74+820x126x26.74
	g.Number of circuits		3	3	4	4
Indoor air flow (Hi/Mi/Lo)		m3/h	510/360/285	600/450/370	800/600/470	1090/790/635
Indoor sound pressure level (Hi/Mi/Lo)		dB(A)	39/34/25	39/32/26	43/36/28	46/39.5/32.5
Indoor sound power level		dB(A)	56	56	58	60
Indoor unit	Dimension(W*D*H)	mm	723x199x286	813x201x289	975x218x308	1055x231x330
	Packing (W*D*H)	mm	780x270x365	870x270x365	1035x295x385	1130x405x315
	Net/Gross weight	Kg	7.5/9.6	8/10.4	10.2/13.3	13/16.4
Design pressure		MPa	4.3/1.7	4.3/1.7	4.3/1.7	4.3/1.7
Refrigerant piping	Liquid side/ Gas side	mm (inch)	Φ6.35/Φ9.52(1/4"/3/8")	Φ6.35/Φ9.52(1/4"/3/8")	Φ6.35/Φ12.7(1/4"/1/2")	Φ6.35/Φ12.7(1/4"/1/2")
Controller		Wired Con-trol	Remote Control	Remote Control	Remote Control	Remote Control
Operation temperature		°C	16~30	16~30	16~30	16~30
Room tem-perature	Cooling	°C	16~32	16~32	16~32	16~32
	Heating	°C	0~30	0~30	0~30	0~30

Notes:

1) Capacities are based on the following conditions:

Cooling(T1): - Indoor Temperature 27°C(80.6°F) DB /19 °C(66.2°F) WB
-Outdoor Temperature 35 °C(95°F) DB /24 °C(75.2°F) WB
-Interconnecting Piping Length 5m
- Level Difference of Zero.

Heating: - Indoor Temperature 20°C(68°F) DB / 15°C(59°F) WB
-Outdoor Temperature 7°C(44.6°F) DB / 6°C(42.8°F) WB
- Interconnecting Piping Length 5 m
- Level Difference of Zero.

2) Capacities are Net Capacities.

3) Due to our policy of innovation some specifications may be changed without notification.

4) TDB Summer Outdoor: 35°C; TWB Summer Outdoor: 21,4°C; TDB Winter Outdoor: -0.8°C; RH Winter Outdoor: 90%.

Indoor model			MSGPAU-07HRFN8-QRD1GW	MSGPAU-09HRFN8-QRD1GW	MSGPBU-12HRFN8-QRD1GW	MSGPCU-18HRFN8-QRD1GW	MSGPDU-24HRFN8-QRD1GW
Power supply (Indoor)		V- Ph-Hz	220~240-1-50	220~240-1-50	220~240-1-50	220~240-1-50	220~240-1-50
Cooling	Capacity	Btu/h	7000	9000	12000	18000	24000
	Input	W	23	23	23	36	68
	Current	A	0.10	0.10	0.10	0.16	0.31
Heating	Capacity	Btu/h	8000	10000	13000	18400	25000
	Input	W	23	23	23	36	68
	current	A	0.10	0.10	0.10	0.16	0.31
Indoor fan motor	Model		ZKFP-31-8-1L	ZKFP-30-8-357L	ZKFP-30-8-357L	ZKFP-35-10-188L	ZKFP-58-8-26L
	Input	W	48.6	42.9	42.9	55	88
	Capacitor	uF	/	/	/	/	/
	Speed(Hi/Mi/Lo)	r/min	1050/930/870	1050/930//870	1000/880/820	1000/868/802	1050/910/840
Indoor coil	a.Number of rows	3.0	1	2	2	2	2
	b.Tube pitch(a)x row pitch(b)	mm	18x17.3	19.5x11.6	19.5x11.6	19.5x11.6	21x13.37
	c.Fin spacing	mm	1,3	1.3	1.3	1.3	1.3
	d.Fin Type (code)		Hydrophilic aluminum	Hydrophilic aluminum	Hydrophilic aluminum	Hydrophilic aluminum	Hydrophilic aluminum
	e.Tube outside dia. and Type	mm	Φ5,Inner groove tube	Φ5,Inner groove tube	Φ5,Inner groove tube	Φ5,Inner groove tube	Φ7,Inner groove tube
	f.Coil length x height x width	mm	530x72x17.3+530x108x17.3+530x108x17.3	530x195x23.2+530x97.5x23.2	620x195x23.2+620x97.5x23.2	770x195x23.2+770x117x23.2	820x231x26.74+820x126x26.74
	g.Number of circuits		2	3	3	4	4
Indoor air flow (Hi/Mi/Lo)		m3/h	490/360/300	510/360/285	600/450/370	800/600/470	1090/790/635
Indoor sound pressure level (Hi/Mi/Lo)		dB(A)	32/23/18	34/25/19	32/26/20	36/28/21.5	39.5/32.5/21.5
Indoor sound power level		dB(A)	54	56	56	58	60
Indoor unit	Dimension(W*D*H)	mm	723x199x286	723x199x286	813x201x289	975x218x308	1055x231x330
	Packing (W*D*H)	mm	780x270x365	780x270x365	870x270x365	1065x300x385	1130x405x310
	Net/Gross weight	Kg	6.9/9.1	7.5/9.6	8/10.4	10.2/13.3	13/16.4
Design pressure		MPa	4.3/1.7	4.3/1.7	4.3/1.7	4.3/1.7	4.3/1.7
Refrigerant piping	Liquid side/ Gas side	mm (inch)	Φ6.35/Φ9.52(1/4"/3/8")	Φ6.35/Φ9.52(1/4"/3/8")	Φ6.35/Φ9.52(1/4"/3/8")	Φ6.35/Φ12.7(1/4"/1/2")	Φ6.35/Φ12.7(1/4"/1/2")
Controller		Wired Control	Remote Control	Remote Control	Remote Control	Remote Control	Remote Control
Operation temperature		°C	16~30	16~30	16~30	16~30	16~30
Room temperature	Cooling	°C	16~32	16~32	16~32	16~32	16~32
	Heating	°C	0~30	0~30	0~30	0~30	0~30

Notes:

1) Capacities are based on the following conditions:

Cooling(T1): - Indoor Temperature 27°C(80.6°F) DB /19 °C(66.2°F) WB
-Outdoor Temperature 35 °C(95°F) DB /24 °C(75.2°F) WB
-Interconnecting Piping Length 5m
- Level Difference of Zero.

Heating: - Indoor Temperature 20°C(68°F) DB / 15°C(59°F) WB
-Outdoor Temperature 7°C(44.6°F) DB / 6°C(42.8°F) WB
- Interconnecting Piping Length 5 m
- Level Difference of Zero.

2) Capacities are Net Capacities.

3) Due to our policy of innovation some specifications may be changed without notification.

4) TDB Summer Outdoor: 35°C; TWB Summer Outdoor: 21,4°C; TDB Winter Outdoor: -0.8°C; RH Winter Outdoor: 90%.

Indoor model			MSCB1BU-09HRFN8-QRD1GW	MSCB1BU-12HRFN8-QRD1GW	MSCB1CU-18HRFN8-QRD1GW	MSCB1DU-24HRFN8-QRD1GW
Power supply (Indoor)		V- Ph-Hz	220~240-1-50	220~240-1-50	220~240-1-50	220~240-1-50
Cooling	Capacity	Btu/h	9500	12000	18000	24000
	Input	W	25	25	30	58
	Current	A	0.11	0.11	0.14	0.26
Heating	Capacity	Btu/h	10000	12900	19000	25000
	Input	W	25	25	30	58
	current	A	0.11	0.11	0.14	0.26
Indoor fan motor	Model		ZKFP-20-8-198	ZKFP-20-8-198	ZKFP-30-8-297L	ZKFP-58-8-25L
	Capacitor	uF	/	/	/	/
	Speed(Hi/Mi/Lo)	r/min	1000/860/790	1020/870/800	1000/850/650	1050/900/830
Indoor coil	a.Number of rows	3.0	2	2	2	2
	b.Tube pitch(a)x row pitch(b)	mm	19.5x11.6	19.5x11.6	21x13.37	21x13.37
	c.Fin spacing	mm	1.3	1.3	1.3	1.3
	d.Fin Type (code)		Hydrophilic aluminum	Hydrophilic aluminum	Hydrophilic aluminum	Hydrophilic aluminum
	e.Tube outside dia. and Type	mm	Φ5,Inner groove tube	Φ5,Inner groove tube	Φ7,Inner groove tube	Φ7,Inner groove tube
	f.Coil length x height x width	mm	580x195x23.2+580x117x23.2	580x195x23.2+580x117x23.2	720x231x26.74+720x147x26.74	780x252x26.74+ 780x126x26.74
	g.Number of circuits		4	4	3	4
Indoor air flow (Hi/Mi/Lo)		m3/h	510/415/375	520/420/380	835/620/510	1170/950/810
Indoor sound pressure level (Hi/Mi/Lo)		dB(A)	37.0/32.0/20.0	37.5/35.5/20	41/36.5/32.5	45.0/40.5/30.5
Indoor sound power level		dB(A)	53.0	55.0	53.0	65.0
Indoor unit	Dimension(W*D*H)	mm	812x299x199	812x299x199	968x225x320	1030x238x338
	Packing (W*D*H)	mm	870x277x385	870x277x385	1027x307x412	1125x430x345
	Net/Gross weight	Kg	9.1/11.6	9.3/12.2	12.3/16.2	14.0/18.6
Design pressure		MPa	4.3/1.7	4.3/1.7	4.3/1.7	4.3/1.7
Refrigerant piping	Liquid side/ Gas side	mm (inch)	Φ6.35/Φ9.52(1/4"/3/8")	Φ6.35/Φ9.52(1/4"/3/8")	Φ6.35/Φ12.7(1/4"/1/2")	Φ6.35/Φ15.9(1/4"/5/8")
Controller		Wired Control	Remote Control	Remote Control	Remote Control	Remote Control
Operation temperature		°C	16~30	16~30	16~30	16~30
Room tem-perature	Cooling	°C	16~32	16~32	16~32	16~32
	Heating	°C	0~30	0~30	0~30	0~30

Notes:

1) Capacities are based on the following conditions:

Cooling(T1): - Indoor Temperature 27°C(80.6°F) DB /19 °C(66.2°F) WB
-Outdoor Temperature 35 °C(95°F) DB /24 °C(75.2°F) WB
-Interconnecting Piping Length 5m
- Level Difference of Zero.

Heating: - Indoor Temperature 20°C(68°F) DB / 15°C(59°F) WB
-Outdoor Temperature 7°C(44.6°F) DB / 6°C(42.8°F) WB
- Interconnecting Piping Length 5 m
- Level Difference of Zero.

2) Capacities are Net Capacities.

3) Due to our policy of innovation some specifications may be changed without notification.

4) TDB Summer Outdoor: 35°C; TWB Summer Outdoor: 21,4°C; TDB Winter Outdoor: -0.8°C; RH Winter Outdoor: 90%.

Outdoor model			M2OG-14HFN8-Q	M2OC-18HFN8-Q	M2OD-18HFN8-Q	M3OA-18HFN8-Q
Indoor unit combination			MSAFBU-07HRDNX-QRD0GW	MSAFBU-09HRDN8-QRD0GW	MSAFBU-09HRDN8-QRD0GW	MSAGAU-09HRFNX-QRD0GW
Power Supply (Outdoor)		V-Ph-Hz	220~240-1-50	220~240-1-50	220~240-1-50	220~240-1-50
Cooling	Capacity	Btu/h	14000(6210~16400)	18000(3860~18000)	18000(3860~19000)	18000(7000~20500)
	Input	W	1270(168~1714)	1630(150~2000)	1630(150~2000)	1450(670~1900)
	Rated current	A	5.52(0.73~9.3)	7.1(0.7~9.27)	7.1(0.7~9.21)	6.4(3.0~8.5)
	EER	W/W	3.2	3.24	3.24	3.64
Heating	Capacity	Btu/h	15000(5220~17400)	19000(6120~19000)	19000(6120~20000)	18000(7000~19500)
	Input	W	1185(265~1707)	1390(300~1670)	1390(300~1650)	1380(650~1650)
	Rated current	A	5.15(1.15~9.4)	6.1(1.4~7.74)	6.1(1.4~7.41)	6.2(2.9~7.3)
	COP	W/W	3.71	4.01	4.01	3.82
Max. input consumption		W	2650	2300	2850	2760
Max. current		A	11.5	12	13	12
Compressor	Model		KSN140D21UFZ	KSM135D23UFZ	KSN140D21UFZ	KSN140D58UFZ
	Type		ROTARY	ROTARY	ROTARY	ROTARY
	Brand		GMCC	GMCC	GMCC	GMCC
	Capacity	Btu/h	4385	4230	4385	4315
	Input	W	1140	1080	1140	1090
	Rated current(RLA)	A	7.50	7.1	7.50	7.15
	Locked rotor Amp(LRA)	A	/	/	/	/
	Thermal protector position		/	/	/	/
	Capacitor	μF	/	/	/	/
	Refrigerant oil	ml	VG74 440	VG74/450	VG74 440	ESTER OIL VG74 440
Outdoor fan motor	Model		ZKFN-34-8-1-3	ZKFN-40-8-1L-5	ZKFN-34-8-1-3	ZKFN-34-10-1L
	Qty		1	1	1	1
	Output	W	34	40.0	34	34
	Capacitor	uF	/	/	/	/
	Speed	r/min	850/750/650	850/750/650	850/750/650	810/700/500
Outdoor coil	Number of rows		1	2.0	2	2
	Tube pitch(a)x row pitch(b)	mm	21x22	25.4x22	25.4x22	21x22
	Fin spacing	mm	1.2	1.4	1.4	1.3
	Fin Type (code)		Hydrophilic aluminum	Hydrophilic aluminum	Hydrophilic aluminum	Hydrophilic aluminum
	Tube outside dia.and Type	mm	Φ7,Inner groove tube	Φ9.52,Inner groove tube	Φ9.52,Inner groove tube	Φ7,Inner groove tube
	Coil length x height x width	mm	870x504x22	860x508x44	860x508x44	860x504x44
	Number of circuits		2	4	4	4
Outdoor air flow		m3/h	2200	2200	/	2100
Outdoor sound pressure level		dB(A)	56	56	55.5	57
Outdoor sound power level		dB(A)	64	64	65	64
Throttle Type			EXV+Capillary	EXV+Capillary	EXV+Capillary	EXV+Capillary
Outdoor unit	Dimension(W*D*H)	mm	800x333x554	800x333x554	800x333x554	805x330x554
	Packing (W*D*H)	mm	920x390x615	920x390x625	920x390x615	950x370x615
	Net/Gross weight	kg	31.8/34.9	36/39	35.5/38.5	36.2/39.4
Refrigerant Type	Type	-	R32	R32	R32	R32
	GWP	-	675	675	675	675
	Charged quantity	kg	1.1	1.3	1.25	1.5
Design pressure		MPa	4.3/1.7	4.3/1.7	4.3/1.7	4.3/1.7

Refrigerant piping	Liquid side/ Gas side	mm(inch)	2 x Φ6.35/Φ9.52(1/4”/3/8”)	2 x Φ6.35/Φ9.52(1/4”/3/8”)	2 x Φ6.35/Φ9.52(1/4”/3/8”)	3x Φ6.35/Φ9.52(1/4”/3/8”)
	Max. length for all rooms	m	40	40	40	60
	Max. length for one indoor unit	m	25	25	25	30
	Max. height difference between indoor and outdoor unit	m	15	15	15	15
	Max. height difference between indoor units	m	10	10	10	10
Ambient temperature	Cooling	°C	-15~50	-15~50	-15~50	-15~50
	Heating	°C	-15~24	-15~24	-15~24	-15~24

Notes:

1) Capacities are based on the following conditions:

Cooling(T1): - Indoor Temperature 27°C(80.6°F) DB /19 °C(66.2°F) WB
-Outdoor Temperature 35 °C(95°F) DB /24 °C(75.2°F) WB
-Interconnecting Piping Length 5m
- Level Difference of Zero.

Heating: - Indoor Temperature 20°C(68°F) DB / 15°C(59°F) WB
-Outdoor Temperature 7°C(44.6°F) DB / 6°C(42.8°F) WB
- Interconnecting Piping Length 5 m
- Level Difference of Zero.

2) Capacities are Net Capacities.

3) Due to our policy of innovation some specifications may be changed without notification.

4).For other combination, refer to the combination table.

5) TDB Summer Outdoor: 35°C; TWB Summer Outdoor: 21,4°C; TDB Winter Outdoor: -0.8°C; RH Winter Outdoor: 90%.

Outdoor model			M3OE-27HFN8-Q	M3OF-21HFN8-Q	M3OF-27HFN8-Q
Indoor unit combination			MSAFBU-09HRDN8-QRD0GW	MSAFBU-07HRDNX-QRD0GW	MSAFBU-09HRDN8-QRD0GW
Power Supply (Outdoor)		V-Ph-Hz	220~240-1-50	220~240-1-50	220~240-1-50
Cooling	Capacity	Btu/h	27000(7370~27000)	21000(6619~23420)	27000(10100~29000)
	Input	W	2440(200~3070)	1950(180~2240)	2450(235~3220)
	Rated current	A	10.6(0.9~13.5)	9.0(1.09~9.9)	13.7(2.2~14.3)
	EER	W/W	3.24	3.23	3.23
Heating	Capacity	Btu/h	28800(6400~31500)	22500(5900~24740)	28000(6950~32000)
	Input	W	2270(320~2850)	1780(325~1920)	2100(310~2890)
	Rated current	A	10.0(1.4~12.5)	8.5(1.94~8.5)	12.5(2.5~12.9)
	COP	W/W	3.72	3.71	3.91
Max. input consumption		W	3100	3300	3600
Max. current		A	15	15.5	17.5
Compressor	Model		KTF235D22UMT	KSN140D21UFZ	KTM240D57UMT
	Type		ROTARY	ROTARY	ROTARY
	Brand		GMCC	GMCC	GMCC
	Capacity	Btu/h	7650	4385	7715
	Input	W	2065	1140	2085
	Rated current(RLA)	A	9.4	7.50	9.45
	Locked rotor Amp(LRA)	A	/	/	/
	Thermal protector position		/	/	/
	Capacitor	μF	/	/	/
	Refrigerant oil	ml	RB74A F/670	VG74 440	VG74 670
Outdoor fan motor	Model		ZKFN-50-8-2	ZKFN-50-8-2-3	ZKFN-50-8-2-3
	Qty		1	1	1
	Output	W	50	50	50
	Capacitor	uF	/	/	/
	Speed	r/min	850/750/600	750/650/550	850/650/550
Outdoor coil	Number of rows		2	2	1
	Tube pitch(a)x row pitch(b)	mm	25.4x22	21x22	25.4x22
	Fin spacing	mm	1.4	1.2	1.4
	Fin Type (code)		Hydrophilic aluminum	Hydrophilic aluminum	Unhydrophilic aluminium
	Tube outside dia.and Type	mm	Φ9.52,Inner groove tube	Φ7,Inner groove tube	Φ9.52,Inner groove tube
	Coil length x height x width	mm	730x660x44	730x651x44	730x660x22
	Number of circuits		4	4	4
Outdoor air flow		m3/h	2700	/	/
Outdoor sound pressure level		dB(A)	59	57.5	59
Outdoor sound power level		dB(A)	66	65	67
Throttle Type			EXV+Capillary	EXV+Capillary	EXV+Capillary
Outdoor unit	Dimension(W*D*H)	mm	845x363x702	845x363x702	845x363x702
	Packing (W*D*H)	mm	965x395x775	965x395x775	965x395x775
	Net/Gross weight	kg	54.4/59.2	46.8/51.1	51.1/55.8
Refrigerant Type	Type	-	R32	R32	R32
	GWP	-	675	675	675
	Charged quantity	kg	1.57	1.4	1.72
Design pressure		MPa	4.3/1.7	4.3/1.7	4.3/1.7
Refrigerant piping	Liquid side/ Gas side	mm(inch)	3 x Φ6.35/Φ9.52(1/4"/3/8")	3 x Φ6.35/Φ9.52(1/4”/3/8”)	3 x Φ6.35/Φ9.52(1/4”/3/8”)
	Max. length for all rooms	m	60	60	60
	Max. length for one indoor unit	m	30	30	30
	Max. height difference between indoor and outdoor unit	m	15	15	15
	Max. height difference between indoor units	m	10	10	10
Ambient temperature	Cooling	°C	-15~50	-15~50	-15~50
	Heating	°C	-15~24	-15~24	-15~24

Notes:

1) Capacities are based on the following conditions:

Cooling(T1): - Indoor Temperature 27°C(80.6°F) DB /19 °C(66.2°F) WB
-Outdoor Temperature 35 °C(95°F) DB /24 °C(75.2°F) WB
-Interconnecting Piping Length 5m
- Level Difference of Zero.

Heating: - Indoor Temperature 20°C(68°F) DB / 15°C(59°F) WB
-Outdoor Temperature 7°C(44.6°F) DB / 6°C(42.8°F) WB
- Interconnecting Piping Length 5 m
- Level Difference of Zero.

2) Capacities are Net Capacities.

3) Due to our policy of innovation some specifications may be changed without notification.

4).For other combination, refer to the combination table.

5) TDB Summer Outdoor: 35°C; TWB Summer Outdoor: 21,4°C; TDB Winter Outdoor: -0.8°C; RH Winter Outdoor: 90%.

Outdoor model			M4OE-28HFN8-Q	M4OB-36HFN8-Q	M5OD-42HFN8-Q	M5OE-42HFN8-Q
Indoor unit combination			MSAFBU-07HRDNX-QRD0GW	MSAFBU-09HRDN8-QRD0GW	MSAFBU-09HRDN8-QRD0GW	MSAFBU-09HRDN8-QRD0GW
Power Supply (Outdoor)		V-Ph-Hz	220~240-1-50	220~240-1-50	220~240-1-50	220~240-1-50
Cooling	Capacity	Btu/h	28000(8000~34200)	36000(12430~37000)	42000(10170~42000)	42000(10300~42000)
	Input	W	2550(204~3446)	3300(330~4250)	4320(280~4580)	3810(280~4650)
	Rated current	A	11(1.17~15)	15.0(1.5~18.5)	18.9(1.2~20.0)	16(1.4~20.7)
	EER	W/W	3.23	3.2	2.85	3.23
Heating	Capacity	Btu/h	30000(8100~35800)	37000(9730~41000)	42000(9370~42000)	42000(11800~42000)
	Input	W	2050(431~3050)	2760(470~4210)	3100(510~4000)	3300(650~3800)
	Rated current	A	9(2.55~13.3)	12.1(2.1~18.4)	13.5(2.2~17.6)	14.6(3.0~16.6)
	COP	W/W	4.0	3.93	3.97	3.73
Max. input consumption		W	4150	4600	4700	4700
Max. current		A	19	21.5	22	22
Compressor	Model		KTM240D57UMT	KTF310D43UMT	KTF310D43UMT	KTF310D43UMT
	Type		ROTARY	ROTARY	ROTARY	ROTARY
	Brand		GMCC	GMCC	GMCC	GMCC
	Capacity	Btu/h	7715	10010	10010	10010
	Input	W	2085	2765	2765	2765
	Rated current(RLA)	A	9.45	5.38	5.38	5.38
	Locked rotor Amp(LRA)	A	/	/	/	/
	Thermal protector position		/	EXTERNAL	EXTERNAL	EXTERNAL
	Capacitor	μF	/	/	/	/
	Refrigerant oil	ml	VG74 670	VG74/1000	VG74/1000	VG74/1000
Outdoor fan motor	Model		ZKFN-120-8-2	ZKFN-120-8-2	ZKFN-120-8-2	ZKFN-120-8-2
	Qty		1	1	1	1
	Output	W	120	120	120	120
	Capacitor	uF	/	/	/	/
	Speed	r/min	900/750/600	900/750/600	900/750/600	900/750/600
Outdoor coil	Number of rows		2	2.0	3.0	3
	Tube pitch(a)x row pitch(b)	mm	21x13.37	25.4x22	25.4x22	25.4x22
	Fin spacing	mm	1.4	1.3	1.3	1.3
	Fin Type (code)		Hydrophilic aluminum	Hydrophilic aluminum	Hydrophilic aluminum	Hydrophilic aluminum
	Tube outside dia.and Type	mm	Φ7,Inner groove tube	Φ9.52,Inner groove tube	Φ9.52,Inner groove tube	Φ9.52,Inner groove tube
	Coil length x height x width	mm	1005x756x13.37+ 985x756x13.37	995x762x44	978x762x44+580x762x22	995x762x22+960x762x22+580x762x22
	Number of circuits		6	4	4	4
Outdoor air flow		m3/h	/	4000	3850	3850
Outdoor sound pressure level		dB(A)	61.5	61	64	64
Outdoor sound power level		dB(A)	67	67	69	69
Throttle Type			EXV+Capillary	EXV+Capillary	EXV+Capillary	EXV+Capillary
Outdoor unit	Dimension(W*D*H)	mm	946x410x810	946x410x810	946x410x810	946x410x810
	Packing (W*D*H)	mm	1090x500x885	1090x500x885	1090x500x885	1090x500x885
	Net/Gross weight	kg	62.1/67.7	68.8/75.6	73.3/80.4	74.1/79.5
Refrigerant Type	Type	-	R32	R32	R32	R32
	GWP	-	675	675	675	675
	Charged quantity	kg	2.1	2.1	2.4	2.9
Design pressure		MPa	4.3/1.7	4.3/1.7	4.3/1.7	4.3/1.7

Refrigerant piping	Liquid side/ Gas side	mm(inch)	4 x Φ6.35/3x Φ9.52+1xΦ12.7(4x1/4”/3x3/8”+1x1/2”)	4 x Φ6.35/3x Φ9.52+1xΦ12.7(4x1/4”/3x3/8”+1x1/2”)	5 x Φ6.35/4x Φ9.52+1xΦ12.7(5x1/4”/4x3/8”+1x1/2”)	5 x Φ6.35/4x Φ9.52+1xΦ12.7(5x1/4”/4x3/8”+1x1/2”)
	Max. length for all rooms	m	80	80	80	80
	Max. length for one indoor unit	m	35	35	35	35
	Max. height difference between indoor and outdoor unit	m	15	15	15	15
	Max. height difference between indoor units	m	10	10	10	10
Ambient temperature	Cooling	°C	-15~50	-15~50	-15~50	-15~50
	Heating	°C	-15~24	-15~24	-15~24	-15~24

Notes:

1) Capacities are based on the following conditions:

Cooling(T1): - Indoor Temperature 27°C(80.6°F) DB /19 °C(66.2°F) WB
-Outdoor Temperature 35 °C(95°F) DB /24 °C(75.2°F) WB
-Interconnecting Piping Length 5m
- Level Difference of Zero.

Heating: - Indoor Temperature 20°C(68°F) DB / 15°C(59°F) WB
-Outdoor Temperature 7°C(44.6°F) DB / 6°C(42.8°F) WB
- Interconnecting Piping Length 5 m
- Level Difference of Zero.

2) Capacities are Net Capacities.

3) Due to our policy of innovation some specifications may be changed without notification.

4).For other combination, refer to the combination table.

5) TDB Summer Outdoor: 35°C; TWB Summer Outdoor: 21,4°C; TDB Winter Outdoor: -0.8°C; RH Winter Outdoor: 90%.

Outdoor model			M2OH-14HFN8-Q	M2OE-18HFN8-Q	M3OB-27HFN8-Q
Indoor unit combination			MSAFBU-07HRDNX-QRD0GW	MSAFBU-09HRDN8-QRD0GW	MSAFBU-09HRDN8-QRD0GW
Power Supply (Outdoor)		V-Ph-Hz	220~240-1-50	220~240-1-50	220~240-1-50
Cooling	Capacity	Btu/h	14000(5100~17000)	18000(7800~19500)	27000(10850~28000)
	Input	W	1270(115~1672)	1635(690~2000)	2450(290~3100)
	Rated current	A	5.8(1.12~7.35)	7.3(3.20~9.00)	11.2(2.0~13.5)
	EER	W/W	3.23	3.23	3.23
Heating	Capacity	Btu/h	15000(5200~17000)	19000(8200~19600)	28000(7800~29000)
	Input	W	1185(253~1592)	1500(600~1780)	2210(370~2900)
	Rated current	A	5.4(1.9~7.0)	6.6(2.80~7.95)	10.1(2.4~13)
	COP	W/W	3.71	3.71	3.71
Max. input consumption		W	2750	3050	4100
Max. current		A	12	13.0	18
Compressor	Model		KSN140D58UFZ	KSN140D58UFZ	KTM240D57UMT
	Type		ROTARY	ROTARY	Twin-ROTARY
	Brand		GMCC	GMCC	GMCC
	Capacity	Btu/h	4315	4315	7740
	Input	W	1090	1090	2085
	Rated current(RLA)	A	7.15	7.15	9.45
	Locked rotor Amp(LRA)	A	/	/	/
	Thermal protector position		/	/	/
	Capacitor	μF	/	/	/
	Refrigerant oil	ml	ESTER OIL VG74 440	ESTER OIL VG74 440	VG74/670
Outdoor fan motor	Model		ZKFN-34-10-1-3	ZKFN-34-10-1-3	ZKFN-80-8-3
	Qty		1	1	1
	Output	W	34	34	88.0
	Capacitor	uF	/	/	/
	Speed	r/min	760/700/500	760/700/500	800/580
Outdoor coil	Number of rows		1.0	2.0	2
	Tube pitch(a)x row pitch(b)	mm	21x22	21x22	21x22
	Fin spacing	mm	1.3	1.3	1.3
	Fin Type (code)		Hydrophilic aluminum	Hydrophilic aluminum	Hydrophilic aluminium
	Tube outside dia.and Type	mm	Φ7,Inner groove tube	Φ7,Inner groove tube	Φ7,Inner groove tube
	Coil length x height x width	mm	870x504x22	860*504*44	900*22*609+865*22*609
	Number of circuits		2	4	6
Outdoor air flow		m3/h	2100	2100	3000
Outdoor sound pressure level		dB(A)	56	54.0	58
Outdoor sound power level		dB(A)	64	65	67
Throttle Type			EXV+Capillary	EXV+Capillary	EXV+Capillary
Outdoor unit	Dimension(W*D*H)	mm	805x330x554	805x330x554	890x342x673
	Packing (W*D*H)	mm	915x370x615	915x370x615	1030x438x750
	Net/Gross weight	kg	31.6/34.7	35.0/38.0	48/51.8
Refrigerant Type	Type	-	R32	R32	R32
	GWP	-	675	675	675
	Charged quantity	kg	1.1	1.25	1.80
Design pressure		MPa	4.3/1.7	4.3/1.7	4.3/1.7
Refrigerant piping	Liquid side/ Gas side	mm(inch)	2 x Φ6.35/Φ9.52(1/4"/3/8")	2 x Φ6.35/Φ9.52(1/4"/3/8")	3 x Φ6.35/Φ9.52(1/4"/3/8")
	Max. length for all rooms	m	40	40	60
	Max. length for one indoor unit	m	25	25	30
	Max. height difference between indoor and outdoor unit	m	15	15	15
	Max. height difference between indoor units	m	10	10	10
Ambient temperature	Cooling	°C	-15~50	-15~50	-15~50
	Heating	°C	-15~24	-15~24	-15~24

Notes:

1) Capacities are based on the following conditions:

Cooling(T1): - Indoor Temperature 27°C(80.6°F) DB /19 °C(66.2°F) WB
-Outdoor Temperature 35 °C(95°F) DB /24 °C(75.2°F) WB
-Interconnecting Piping Length 5m
- Level Difference of Zero.

Heating: - Indoor Temperature 20°C(68°F) DB / 15°C(59°F) WB
-Outdoor Temperature 7°C(44.6°F) DB / 6°C(42.8°F) WB
- Interconnecting Piping Length 5 m
- Level Difference of Zero.

2) Capacities are Net Capacities.

3) Due to our policy of innovation some specifications may be changed without notification.

4).For other combination, refer to the combination table.

Outdoor model			M3OG-21HFN8-Q	M3OA-27HFN8-Q	M4OC-36HFN8-Q
Indoor unit combination			MSAFBU-07HRDNX-QRD0GW	MSAFBU-09HRDN8-QRD0GW	MSAFBU-09HRDN8-QRD0GW
Power Supply (Outdoor)		V-Ph-Hz	220~240-1-50	220~240-1-50	220~240-1-50
Cooling	Capacity	Btu/h	21000(6800~22500)	27000(10850~28000)	36000(12500~39000)
	Input	W	1905(180~2200)	2450(290~3100)	3267(312~4650)
	Rated current	A	8.3(1.8~10.0)	11.2(2.0~13.5)	14.2(2.1~20.5)
	EER	W/W	3.23	3.23	3.23
Heating	Capacity	Btu/h	22000(6800~22800)	28000(7800~29000)	36000(8800~42000)
	Input	W	1738(350~1800)	2210(370~2900)	2844(423~4302)
	Rated current	A	7.6(2.6~8.0)	10.1(2.4~13)	12.4(2.8~18.9)
	COP	W/W	3.71	3.71	3.71
Max. input consumption		W	3910	4100	4900
Max. current		A	17	18	21.5
Compressor	Model		KSN140D58UFZ	KTM240D57UMT	KTF310D43UMT
	Type		ROTARY	Twin-ROTARY	ROTARY
	Brand		GMCC	GMCC	GMCC
	Capacity	Btu/h	4315	7740	10010
	Input	W	1090	2085	2765
	Rated current(RLA)	A	7.15	9.45	5.38
	Locked rotor Amp(LRA)	A	/	/	/
	Thermal protector position		/	/	/
	Capacitor	μF	/	/	/
	Refrigerant oil	ml	ESTER OIL VG74 440	ESTER OIL VG74 670	VG74/1000
Outdoor fan motor	Model		ZKFN-80-8-3	ZKFN-80-8-3	ZKFN-120-8-2
	Qty		1	1	1
	Output	W	80	80	150
	Capacitor	uF	/	/	/
	Speed	r/min	750/700/600	800/580	900/750/600
Outdoor coil	Number of rows		1.6	2	2
	Tube pitch(a)x row pitch(b)	mm	21x22	21x13.37	25.4x22
	Fin spacing	mm	1.3	1.3	1.3
	Fin Type (code)		Hydrophilic aluminum	Hydrophilic aluminum	Hydrophilic aluminium
	Tube outside dia.and Type	mm	Φ7,Inner groove tube	Φ7,Inner groove tube	Φ9.52,Inner groove tube
	Coil length x height x width	mm	900*609*22+540*609*22	900*609*22+865*609*22	995x762x44
	Number of circuits		5	6	4
Outdoor air flow		m3/h	3000	3000	4000
Outdoor sound pressure level		dB(A)	58.0	58	61
Outdoor sound power level		dB(A)	65	67	69
Throttle Type			EXV+Capillary	EXV+Capillary	EXV+Capillary
Outdoor unit	Dimension(W*D*H)	mm	890x342x673	890x342x673	946x410x810
	Packing (W*D*H)	mm	1030x438x750	1030x438x750	1090x500x885
	Net/Gross weight	kg	43.3/47.1	48/51.8	66/70.9
Refrigerant Type	Type	-	R32	R32	R32
	GWP	-	675	675	675
	Charged quantity	kg	1.5	1.85	1.8
Design pressure		MPa	4.3/1.7	4.3/1.7	4.3/1.7
Refrigerant piping	Liquid side/ Gas side	mm(inch)	3 x Φ6.35/Φ9.52(1/4”/3/8”)	3 x Φ6.35/Φ9.52(1/4”/3/8”)	4 x Φ6.35/3x Φ9.52+1xΦ12.7(4x1/4”/3x 3/8”+1x1/2”)
	Max. length for all rooms	m	60	60	80
	Max. length for one indoor unit	m	30	30	35
	Max. height difference between indoor and outdoor unit	m	15	15	15
	Max. height difference between indoor units	m	10	10	10

Ambient temperature	Cooling	°C	-15~50	-15~50	-15~50
	Heating	°C	-15~24	-15~24	-15~24

Notes:

1) Capacities are based on the following conditions:

Cooling(T1): - Indoor Temperature 27°C(80.6°F) DB /19 °C(66.2°F) WB
-Outdoor Temperature 35 °C(95°F) DB /24 °C(75.2°F) WB
-Interconnecting Piping Length 5m
- Level Difference of Zero.

Heating: - Indoor Temperature 20°C(68°F) DB / 15°C(59°F) WB
-Outdoor Temperature 7°C(44.6°F) DB / 6°C(42.8°F) WB
- Interconnecting Piping Length 5 m
- Level Difference of Zero.

2) Capacities are Net Capacities.

3) Due to our policy of innovation some specifications may be changed without notification.

4).For other combination, refer to the combination table.

5) TDB Summer Outdoor: 35°C; TWB Summer Outdoor: 21,4°C; TDB Winter Outdoor: -0.8°C; RH Winter Outdoor: 90%.

Outdoor model			M2OF-18HFN8-Q	M3OC-27HFN8-Q
Indoor unit combination			MSAGBU-09HRFN8-QRD1GW(GA)	MSAGBU-09HRFN8-QRD1GW(GA)
Power Supply (Outdoor)		V-Ph-Hz	220~240-1-50	220~240-1-50
Cooling	Capacity	Btu/h	18000(8000~19000)	27000(8500~28000)
	Input	W	1280(250~1470)	2082(250~2300)
	Rated current	A	6.0(2.2~6.7)	9.3(2.1~10.5)
	EER	W/W	4.12	3.80
Heating	Capacity	Btu/h	18000(6800~22000)	28000(7200~28500)
	Input	W	1260(260~1790)	2159(260~2300)
	Rated current	A	5.9(2.3~8.0)	10.0(2.2~10.5)
	COP	W/W	4.19	3.80
Max. input consumption		W	3050	4100
Max. current		A	13.0	18
Compressor	Model		KSN140D58UFZ	KTM180D68UMT
	Type		ROTARY	ROTARY
	Brand		GMCC	GMCC
	Capacity	Btu/h	4315	5575
	Input	W	1090	1485
	Rated current(RLA)	A	7.15	6.8
	Locked rotor Amp(LRA)	A	/	/
	Thermal protector position		/	INTERNAL
	Capacitor	μF	NA	/
	Refrigerant oil	ml	ESTER OIL VG74 440	ESTER OIL VG74 620
Outdoor fan motor	Model		ZKFN-80-8-3	ZKFN-120-8-2
	Qty		1	1
	Output	W	88.0	150.0
	Capacitor	uF	/	/
	Speed	r/min	800/580	900/750/600
Outdoor coil	Number of rows		2	2
	Tube pitch(a)x row pitch(b)	mm	21x22	25.4x22
	Fin spacing	mm	1.3	1.3
	Fin Type (code)		Hydrophilic aluminum	Hydrophilic aluminum
	Tube outside dia.and Type	mm	Φ7,Inner groove tube	Φ7,Inner groove tube
	Coil length x height x width	mm	900*609*22+865*609*22	995x762x44
	Number of circuits		6	8
Outdoor air flow		m3/h	3000	4000
Outdoor sound pressure level		dB(A)	59	62
Outdoor sound power level		dB(A)	65	66
Throttle Type			EXV+Capillary	EXV+Capillary
Outdoor unit	Dimension(W*D*H)	mm	890x342x673	946x410x810
	Packing (W*D*H)	mm	1030x438x750	1090x500x885
	Net/Gross weight	kg	45.0/48.5	61/66
Refrigerant Type	Type	-	R32	R32
	GWP	-	675	675
	Charged quantity	kg	1.50	2.1
Design pressure		MPa	4.3/1.7	4.3/1.7
Refrigerant piping	Liquid side/ Gas side	mm(inch)	2x Φ6.35/Φ9.52(1/4"/3/8")	3 x Φ6.35/2x Φ9.52+1xΦ12.7(3x1/4"/2x3/8"+1x1/2")
	Max. length for all rooms	m	60	60
	Max. length for one indoor unit	m	30	30
	Max. height difference between indoor and outdoor unit	m	15	15
	Max. height difference between indoor units	m	10	10
Ambient temperature	Cooling	°C	-15~50	-15~50
	Heating	°C	-15~24	-15~24

Notes:

1) Capacities are based on the following conditions:

Cooling(T1): - Indoor Temperature 27°C(80.6°F) DB /19 °C(66.2°F) WB
-Outdoor Temperature 35 °C(95°F) DB /24 °C(75.2°F) WB
-Interconnecting Piping Length 5m
- Level Difference of Zero.

Heating: - Indoor Temperature 20°C(68°F) DB / 15°C(59°F) WB
-Outdoor Temperature 7°C(44.6°F) DB / 6°C(42.8°F) WB
- Interconnecting Piping Length 5 m
- Level Difference of Zero.

2) Capacities are Net Capacities.

3) Due to our policy of innovation some specifications may be changed without notification.

4).For other combination, refer to the combination table.

5) TDB Summer Outdoor: 35°C; TWB Summer Outdoor: 21,4°C; TDB Winter Outdoor: -0.8°C; RH Winter Outdoor: 90%.

Outdoor model			M3OA-18HFN8-Q(HRU)	M4OA-24HFN8-Q	M4OA-27HFN8-Q(HRU)	M4OB-27HFN8-Q(HRU)
Indoor unit combination			MSGPAU-09HRFN8-QRD1GW	MSGPAU-09HRFN8-QRD1GW	MSGPAU-09HRFN8-QRD6GW	MSCB1BU-09HRFN8-QRD1GW
Power Supply (Outdoor)		V-Ph-Hz	220~240-1-50	220~240-1-50	220~240-1-50	220~240-1-50
Cooling	Capacity	Btu/h	18084(5425~20132)	24226(7268~29003)	26956(8087~29003)	26956(7~34804)
	Input	W	1582(237~2050)	2185(328~3200)	2225(334~2850)	2257(339~2950)
	Rated current	A	7.0(2.10~9.10)	9.80(2.90~14)	10.0(2.90~12.60)	10.10(2.90~13.00)
	EER	W/W	3.35	3.25	3.55	3.50
Heating	Capacity	Btu/h	18084(5425~18426)	24909(7473~31733)	27980(8394~34804)	27980(8394~34804)
	Input	W	1429(213~1670)	1921(288~3300)	2152(323~2950)	2158(324~2950)
	Rated current	A	6.40(1.90~7.40)	8.6(2.5~14.5)	9.70(2.80~13.00)	9.70(2.80~13.00)
	COP	W/W	3.71	3.8	3.81	3.80
Max. input consumption		W	4100	4100	5300	4600
Max. current		A	18	18	23.5	21.0
Compressor	Model		KTN150D30UFZA	KTM240D46UKT2	KTM240D46UKT2	KTM240D46UKT2
	Type		Twin-ROTARY	ROTARY	ROTARY	TWIN-ROTARY
	Brand		GMCC	GMCC	GMCC	GMCC
	Capacity	Btu/h	4730	4780/7600	4780/7600	4780/7600
	Input	W	1250	805/2045	805/2045	805/2045
	Rated current(RLA)	A	8,1	4.15/9.30	4.15/9.30	4.15/9.30
	Locked rotor Amp(LRA)	A	/	/	/	/
	Thermal protector position		/	/	/	/
	Capacitor	μF	/	/	/	/
	Refrigerant oil	ml	ESTER OIL VG74 450	VG74 620	VG74 620	VG74 620
Outdoor fan motor	Model		ZKFN-80-8-3	ZKFN-80-8-3	ZKFN-120-8-9	ZKFN-120-8-6
	Qty		1	1	1	1
	Output	W	80	80	120	120
	Capacitor	uF	/	/	/	/
	Speed	r/min	750/700/600	800/580	900/750/600	900/750/600
Outdoor coil	Number of rows		2	2	2	2
	Tube pitch(a)x row pitch(b)	mm	21x22	21x22	21x22	21x22
	Fin spacing	mm	1.3	1.3	1.3	1.3
	Fin Type (code)		Hydrophilic aluminum	Hydrophilic aluminum	Hydrophilic aluminum	Hydrophilic aluminum
	Tube outside dia.and Type	mm	Φ7,Inner groove tube	Φ7,Inner groove tube	Φ7,Inner groove tube	Φ7,Inner groove tube
	Coil length x height x width	mm	900x609x22+865x609x22	900x609x22+865x609x22	995x762x44	995x762x44
	Number of circuits		6	6	8	8
Outdoor air flow		m3/h	3000	3000	4000	4000
Outdoor sound pressure level		dB(A)	60	60	62	62
Outdoor sound power level		dB(A)	65	65	66	69
Throttle Type			EXV	EXV	EXV	EXV
Outdoor unit	Dimension(W*D*H)	mm	890×342×673	890×342×673	946×410×810	946×410×810
	Packing (W*D*H)	mm	1030×342×750	1030×342×750	1090×410×885	1090×500×885
	Net/Gross weight	kg	46.6/50.3	48.2/52.4	64.3/68.6	61/66
Refrigerant Type	Type	-	R32	R32	R32	R32
	GWP	-	675	675	675	675
	Charged quantity	kg	1.5	2	1.8	1.8
Design pressure		MPa	4.3/1.7	4.3/1.7	4.3/1.7	4.3/1.7

Refrigerant piping	Liquid side/ Gas side	mm(inch)	3 x Φ6.35/3 x Φ9.52(1/4”/3/8”)	4x Φ6.35/4x Φ9.52(1/4”/3/8”)	4x Φ6.35/3x Φ9.52+1x Φ12.7(1/4”/3/8”+1/2”)	4x Φ6.35/3x Φ9.52+1x Φ12.7(1/4”/3/8”+1/2”)
	Max. length for all rooms	m	60(20m for DHW)	80	80(20m for DHW)	80(20m for DHW)
	Max. length for one indoor unit	m	30	35	35	35
	Max. height difference between indoor and outdoor unit	m	15	15	15	15
	Max. height difference between indoor units	m	10	10	10	10
Ambient temperature	Cooling	°C	-15~50	-15~50	-15~50	-15~50
	Heating	°C	-15~24	-15~24	-15~24	-15~24

Notes:

1) Capacities are based on the following conditions:

Cooling(T1): - Indoor Temperature 27°C(80.6°F) DB /19 °C(66.2°F) WB
-Outdoor Temperature 35 °C(95°F) DB /24 °C(75.2°F) WB
-Interconnecting Piping Length 5m
- Level Difference of Zero.

Heating: - Indoor Temperature 20°C(68°F) DB / 15°C(59°F) WB
-Outdoor Temperature 7°C(44.6°F) DB / 6°C(42.8°F) WB
- Interconnecting Piping Length 5 m
- Level Difference of Zero.

2) Capacities are Net Capacities.

3) Due to our policy of innovation some specifications may be changed without notification.

4).For other combination, refer to the combination table.

5) TDB Summer Outdoor: 35°C; TWB Summer Outdoor: 21,4°C; TDB Winter Outdoor: -0.8°C; RH Winter Outdoor: 90%.

4. Indoor Unit Combination

Note: The combination of yellow background is only suitable for GLORY PRO, XTREME, Forest, BREEZELESS E, ALL EASY , Aurora, All Easy wall mounted type.

M2OG-14HFN8-Q

One Unit	Two Units	
7	7+7	9+9
9	7+9	9+12
12	7+12	
18		

M2OH-14HFN8-Q

One Unit	Two Units		
9	7+7	7+12	9+12
12	7+9	9+9	12+12

M2OC-18HFN8-Q& M2OD-18HFN8-Q

One Unit	Two Units	
7	7+7	9+9
9	7+9	9+12
12	7+12	12+12
18		

M2OE-18HFN8-Q& M2OF-18HFN8-Q

One Unit	Two Units		
12	7+7	7+18	9+18
18	7+9	9+9	12+12
	7+12	9+12	12+18

M3OA-18HFN8-Q

One Unit	Two Units			Three Units			
12	7+7	7+18	9+18	7+7+7	7+9+9	9+9+9	12+12+12
18	7+9	9+9	12+12	7+7+9	7+9+12	9+9+12	
	7+12	9+12	12+18	7+7+12	7+12+12	9+12+12	

M3OA-18HFN8-Q(HRU)

One Unit	Two Units			Three Units	
Tank 100L	7+Tank 100L	7+7	9+12	7+7+Tank 100L	9+9+Tank 100L
12	9+Tank 100L	7+9	9+18	7+9+Tank 100L	9+12+Tank 100L
18	12+Tank 100L	7+12	12+12	7+12+Tank 100L	12+12+Tank 100L
	18+Tank 100L	7+18	12+18		
		9+9			

M3OF-21HFN8-Q

One Unit	Two Units		Three Units	
7	7+7	9+9	7+7+7	7+9+9
9	7+9	9+12	7+7+9	9+9+9
12	7+12	9+18	7+7+12	
18	7+18	12+12		

M3OG-21HFN8-Q

One Unit	Two Units			Three Units			
12	7+7	7+18	9+18	7+7+7	7+9+9	9+9+9	12+12+12
18	7+9	9+9	12+12	7+7+9	7+9+12	9+9+12	
24	7+12	9+12	12+18	7+7+12	7+12+12	9+12+12	

M3OE-27HFN8-Q& M3OF-27HFN8-Q

One Unit	Two Units			Three Units		
7	7+7	7+18	9+18	7+7+7	7+9+12	9+9+12
9	7+9	9+9	12+12	7+7+9	7+12+12	9+12+12
12	7+12	9+12	12+18	7+7+12	9+9+9	12+12+12
18				7+9+9		

M3OA-27HFN8-Q& M3OB-27HFN8-Q

One Unit	Two Units			Three Units			
18	7+7	7+18	9+18	7+7+7	7+9+12	9+9+12	12+12+12
24	7+9	9+9	12+12	7+7+9	7+9+18	9+9+18	12+12+18
	7+12	9+12	12+18	7+7+12	7+12+12	9+12+12	
			18+18	7+7+18	7+12+18	9+12+18	
				7+9+9	9+9+9		

M3OC-27HFN8-Q

Two Units			Three Units				
7+12	9+18	18+18	7+7+7	7+9+9	7+12+18	9+9+18	9+18+18
7+18	9+24	18+24	7+7+9	7+9+12	7+12+24	9+9+24	12+12+12
7+24	12+12		7+7+12	7+9+18	7+18+18	9+12+12	12+12+18
9+9	12+18		7+7+18	7+9+24	9+9+9	9+12+18	12+12+24
9+12	12+24		7+7+24	7+12+12	9+9+12	9+12+24	12+18+18

M4OA-24HFN8-Q

One Unit	Two Units		Three Units				Four Units		
18	7+7	9+12	7+7+7	7+9+9	7+12+18	9+12+12	7+7+7+7	7+7+9+18	9+9+9+9
24	7+9	9+18	7+7+9	7+9+12	9+9+9	9+12+18	7+7+7+9	7+7+12+12	9+9+9+12
	7+12	12+12	7+7+12	7+9+18	9+9+12	12+12+12	7+7+7+12	7+9+9+9	9+9+12+12
	7+18	12+18	7+7+18	7+12+12	9+9+18	12+12+18	7+7+7+18	7+9+9+12	9+12+12+12
	9+9	18+18					7+7+9+9	7+9+12+12	12+12+12+12
							7+7+9+12	7+12+12+12	

M4OA-27HFN8-Q(HRU), M4OB-27HFN8-Q(HRU)

One Unit	Two Units		Three Units		
18	7+7	9+9	7+7+7	7+9+12	9+9+12
24	7+9	9+12	7+7+9	7+9+18	9+9+18
	7+12	9+18	7+7+12	7+12+12	9+12+12
	7+18	12+12	7+7+18	7+12+18	9+12+18
	7+24	12+18	7+9+9	9+9+9	12+12+12

If one is tank 100L/190L

One Unit	Two Units	Three Units		Four Units		
Tank	7+Tank	7+7+Tank	9+9+Tank	7+7+7+Tank	7+9+12+Tank	9+9+12+Tank
	9+Tank	7+9+Tank	9+12+Tank	7+7+9+Tank	7+9+18+Tank	9+9+18+Tank
	12+Tank	7+12+Tank	9+18+Tank	7+7+12+Tank	7+12+12+Tank	9+12+12+Tank
	18+Tank	7+18+Tank	12+12+Tank	7+7+18+Tank	7+12+18+Tank	9+12+18+Tank
	24+Tank	7+24+Tank	12+18+Tank	7+9+9+Tank	9+9+9+Tank	12+12+12+Tank

M4OE-28HFN8-Q

Two Units		Three Units			Four Units		
7+7	9+18	7+7+7	7+9+24	9+9+18	7+7+7+7	7+7+12+12	7+12+12+18
7+9	9+24	7+7+9	7+12+12	9+9+24	7+7+7+9	7+7+12+18	9+9+9+9
7+12	12+12	7+7+12	7+12+18	9+12+12	7+7+7+12	7+9+9+9	9+9+9+12
7+18	12+18	7+7+18	7+12+24	9+12+18	7+7+7+18	7+9+9+12	9+9+9+18
7+24	12+24	7+7+24	7+18+18	9+18+18	7+7+7+24	7+9+9+18	9+9+12+12
9+9	18+18	7+9+9	9+9+9	9+12+24	7+7+9+9	7+9+12+12	9+9+12+18
9+12	18+24	7+9+12	9+9+12	12+12+12	7+7+9+12	7+9+12+18	9+12+12+12
		7+9+18		12+12+18	7+7+9+18	7+12+12+12	12+12+12+12

M4OB-36HFN8-Q& M4OC-36HFN8-Q

Two Units		Three Units			Four Units		
7+12	9+18	7+7+7	7+9+24	9+9+24	7+7+7+7	7+7+12+12	9+9+9+9
7+18	9+24	7+7+9	7+12+12	9+12+12	7+7+7+9	7+7+12+18	9+9+9+12
7+24	12+12	7+7+12	7+12+18	9+12+18	7+7+7+12	7+9+9+9	9+9+9+18
9+9	12+18	7+7+18	7+12+24	9+12+24	7+7+7+18	7+9+9+12	9+9+12+12
9+12	12+24	7+7+24	7+18+18	9+18+18	7+7+7+24	7+9+9+18	9+9+12+18
	18+18	7+9+9	9+9+9	12+12+12	7+7+9+9	7+9+12+12	9+12+12+12
	18+24	7+9+12	9+9+12	12+12+18	7+7+9+12	7+9+12+18	9+12+12+18
		7+9+18	9+9+18	12+12+24	7+7+9+18	7+12+12+12	12+12+12+12
				12+18+18	7+7+9+24	7+12+12+18	12+12+12+18

M5OD-42HFN8-Q

One Unit	Two Units			Three Units				
7	7+7	9+9	12+12	7+7+7	7+9+9	7+12+18	9+9+18	9+18+18
9	7+9	9+12	12+18	7+7+9	7+9+12	7+12+24	9+9+24	12+12+12
12	7+12	9+18	12+24	7+7+12	7+9+18	7+18+18	9+12+12	12+12+18
18	7+18	9+24	18+18	7+7+18	7+9+24	9+9+9	9+12+18	12+12+24
24	7+24			7+7+24	7+12+12	9+9+12	9+12+24	12+18+18

Four Units						
7+7+7+7	7+7+9+9	7+7+12+18	7+9+9+18	7+9+18+18	9+9+9+18	9+12+12+12
7+7+7+9	7+7+9+12	7+7+12+24	7+9+9+24	7+12+12+12	9+9+9+24	9+12+12+18
7+7+7+12	7+7+9+18	7+7+18+18	7+9+12+12	7+12+12+18	9+9+12+12	12+12+12+12
7+7+7+18	7+7+9+24	7+9+9+9	7+9+12+18	9+9+9+9	9+9+12+18	12+12+12+18
7+7+7+24	7+7+12+12	7+9+9+12	7+9+12+24	9+9+9+12	9+9+12+24	

Five Units				
7+7+7+7+7	7+7+7+9+18	7+7+9+12+12	7+9+9+9+18	9+9+9+12+12
7+7+7+7+9	7+7+7+12+12	7+7+9+12+18	7+9+9+12+12	9+9+12+12+12
7+7+7+7+12	7+7+7+12+18	7+7+12+12+12	7+9+12+12+12	
7+7+7+7+18	7+7+9+9+9	7+7+12+12+18	9+9+9+9+9	
7+7+7+9+9	7+7+9+9+12	7+9+9+9+9	9+9+9+9+12	
7+7+7+9+12	7+7+9+9+18	7+9+9+9+12	9+9+9+9+18	

M5OE-42HFN8-Q

Two Units		Three Units			
7+18	9+24	7+7+7	7+9+18	9+9+9	9+18+18
7+24	12+12	7+7+9	7+9+24	9+9+12	9+18+24
9+12	12+18	7+7+12	7+12+12	9+9+18	12+12+12
9+18	12+24	7+7+18	7+12+18	9+9+24	12+12+18
	18+18	7+7+24	7+12+24	9+12+12	12+12+24
	18+24	7+9+9	7+18+18	9+12+18	12+18+18
		7+9+12	7+18+24	9+12+24	12+18+24

Four Units					
7+7+7+7	7+7+9+12	7+9+9+9	7+9+12+24	9+9+9+18	9+12+12+18
7+7+7+9	7+7+9+18	7+9+9+12	7+12+12+12	9+9+9+24	9+12+12+24
7+7+7+12	7+7+9+24	7+9+9+18	7+12+12+18	9+9+12+12	12+12+12+12
7+7+7+18	7+7+12+12	7+9+9+24	7+12+12+24	9+9+12+18	12+12+12+18
7+7+7+24	7+7+12+18	7+9+12+12	9+9+9+9	9+9+12+24	12+12+12+24
7+7+9+9	7+7+12+24	7+9+12+18	9+9+9+12	9+12+12+12	

Five Units					
7+7+7+7+7	7+7+7+9+24	7+7+9+12+12	7+9+9+9+18	7+12+12+12+12	9+9+9+12+24
7+7+7+7+9	7+7+7+12+12	7+7+9+12+18	7+9+9+9+24	7+12+12+12+18	9+9+12+12+12
7+7+7+7+12	7+7+7+12+18	7+7+9+12+24	7+9+9+12+12	9+9+9+9+9	9+9+12+12+18
7+7+7+7+18	7+7+7+12+24	7+7+12+12+12	7+9+9+12+18	9+9+9+9+12	9+9+12+12+24
7+7+7+7+24	7+7+9+9+9	7+7+12+12+18	7+9+9+12+24	9+9+9+9+18	9+12+12+12+12
7+7+7+9+9	7+7+9+9+12	7+7+12+12+24	7+9+12+12+12	9+9+9+9+24	9+12+12+12+18
7+7+7+9+12	7+7+9+9+18	7+9+9+9+9	7+9+12+12+18	9+9+9+12+12	12+12+12+12+12
7+7+7+9+18	7+7+9+9+24	7+9+9+9+12	7+9+12+12+24	9+9+9+12+18	12+12+12+12+18

5. Dimensional Drawings

5.1 Indoor Unit

A6 Duct Type

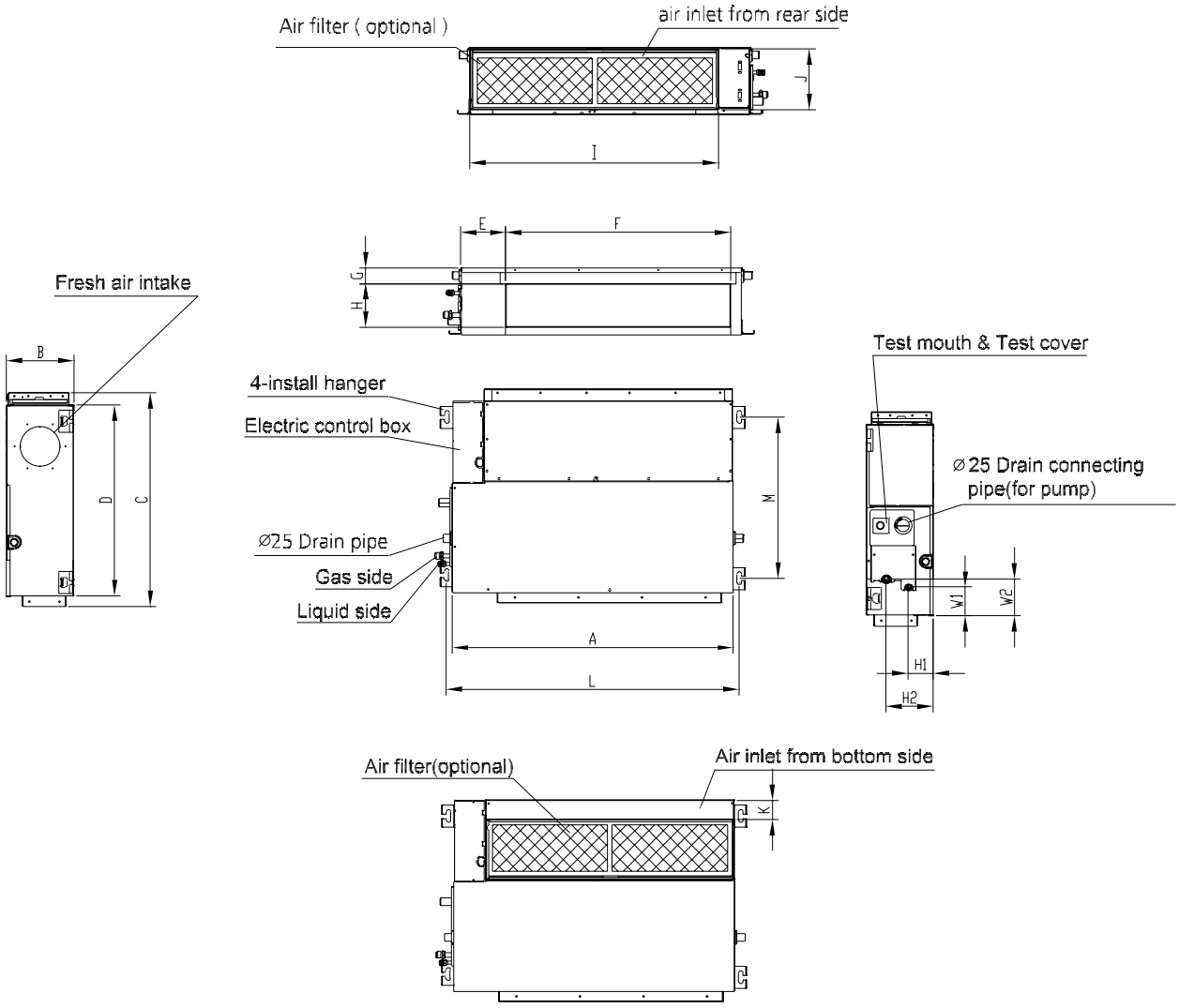

Capacity (Btu/h)	unit	A	B	C	D	E	F	G	H	I	J	K	L	M	H1	H2	W1	W2
7k~12k	mm	700	200	506	450	137	537	30	152	599	186	50	741	360	84	140	84	84
	inch	27.56	7.87	19.92	17.72	5.39	21.14	1.18	5.98	23.58	7.32	1.97	29.17	14.17	3.31	5.51	3.31	3.31
18k	mm	880	210	674	600	140	706	50	136	782	190	40	920	508	78	148	88	112
	inch	34.65	8.27	26.54	23.62	5.51	27.8	1.97	5.35	30.79	7.48	1.57	36.22	20	3.07	5.83	3.46	4.41

A7 Duct Type

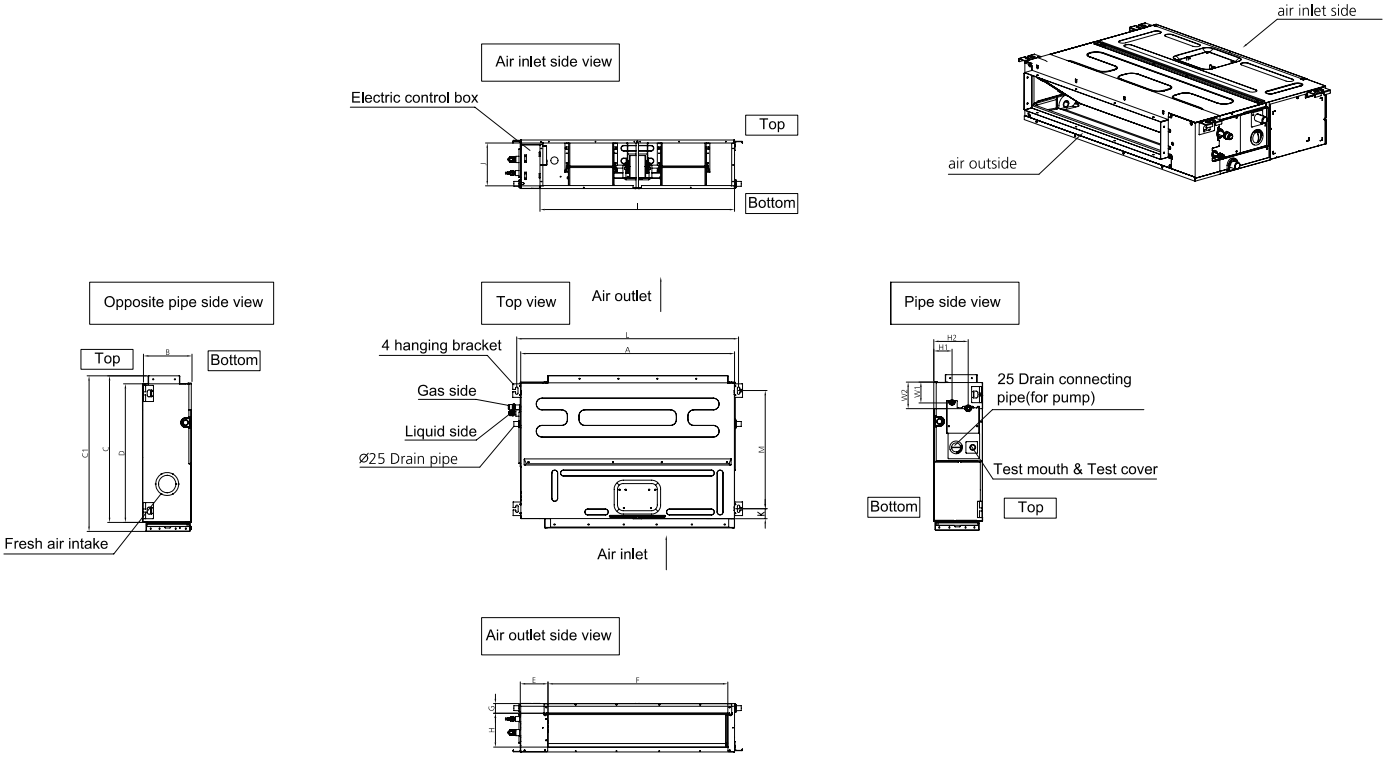

Capacity (kBtu/h)	unit	Outline dimension					Air outlet opening size				Air return opening size			Size of install hanger		Size of refrigerant pipe			
		A	B	C	C1	D	E	F	G	H	I	J	K	L	M	H1	H2	W1	W2
7/9/12	mm	700	200	470	506	450	137	537	30	152	599	186	50	741	360	84	140	84	84
	inch	27.6	7.9	18.5	19.9	17.7	5.4	21.1	1.2	6.0	23.6	7.3	2.0	29.2	14.2	3.3	5.5	3.3	3.3

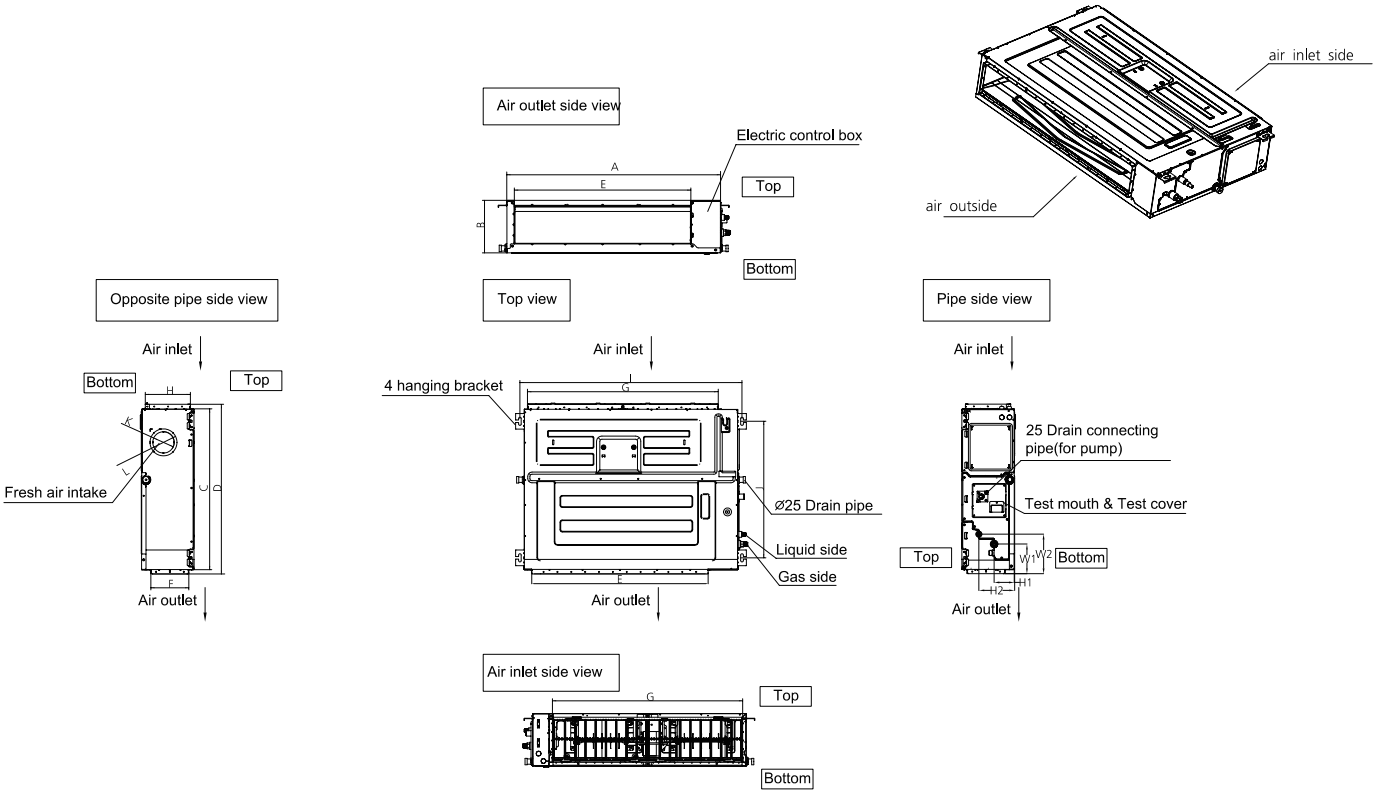

Capacity (kBtu/h)	unit	Outline Dimension				Air Outlet Opening Size		Air Return Opening Size		Size Of Mounted Lug		Fresh Air Intake Opening Size		Size of refrigerant pipe			
		A	B	C	D	E	F	G	H	I	J	K	L	H1	H2	W1	W2
18	mm	700	245	750	795	527	178	592	212	740	640	100	126	72	144	120	165
	inch	27.6	9.6	29.5	31.3	20.7	7.0	23.3	8.3	29.1	25.2	3.9	5.0	2.8	5.7	4.7	6.5
24	mm	1000	245	750	795	827	178	892	212	1040	640	100	126	80	151	120	165
	inch	39.4	9.6	29.5	31.3	32.6	7.0	35.1	8.3	40.9	25.2	3.9	5.0	3.1	5.9	4.7	6.5

Compact Cassette Type

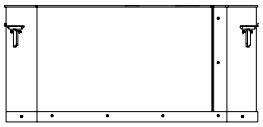

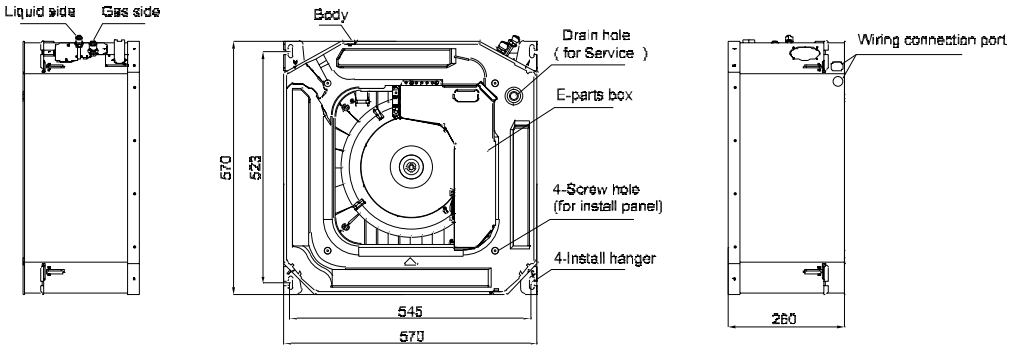

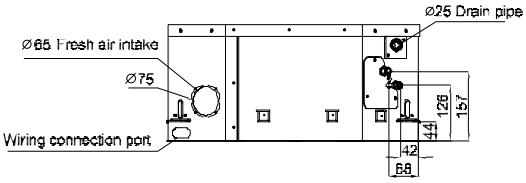

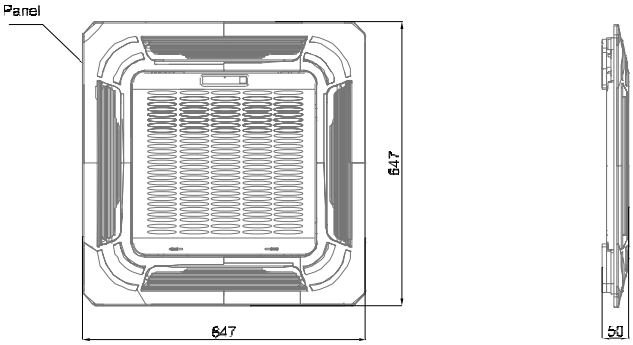

New Compact Cassette Type

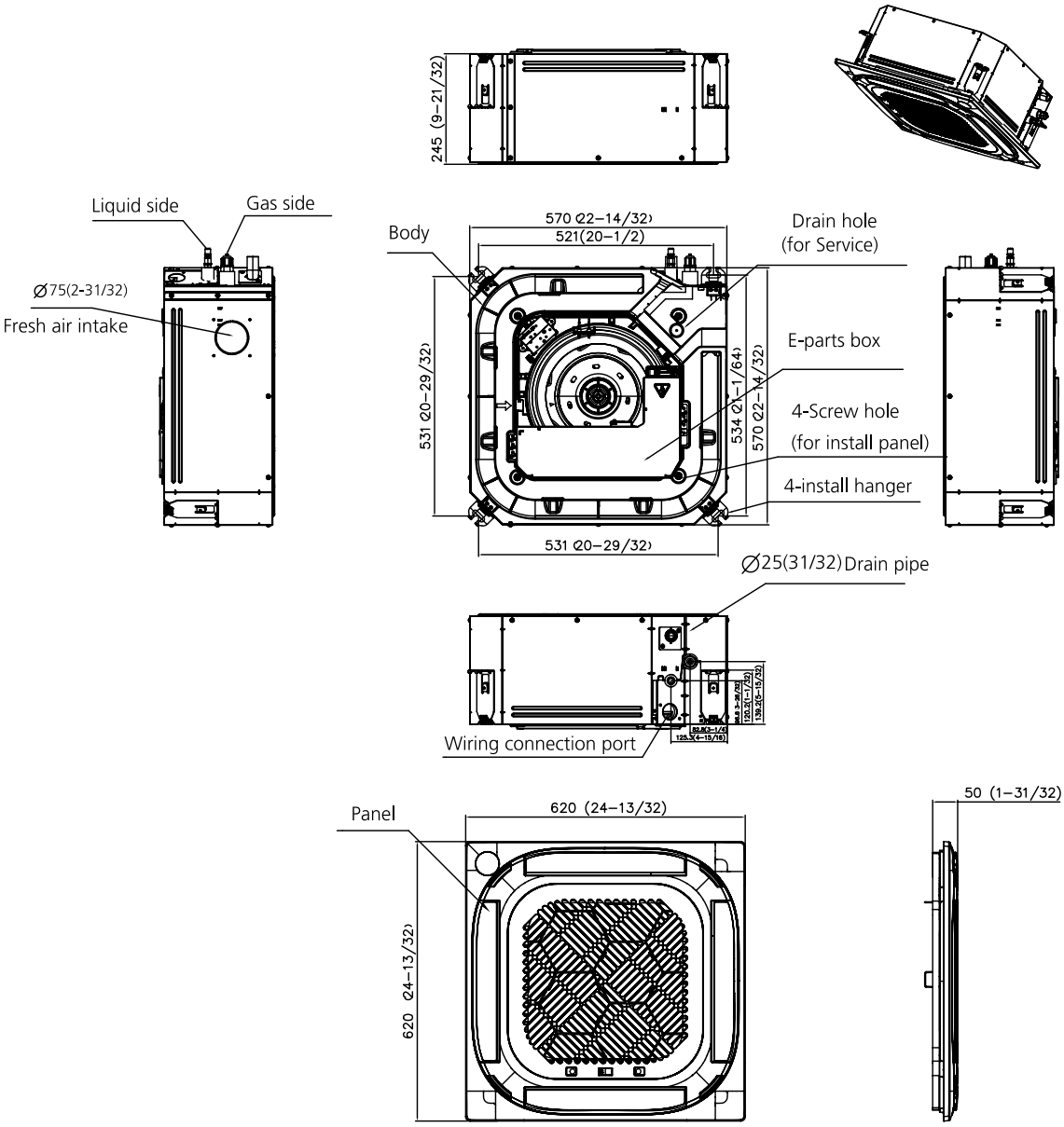

New 4-way Cassette Type

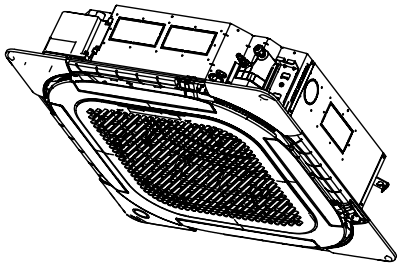

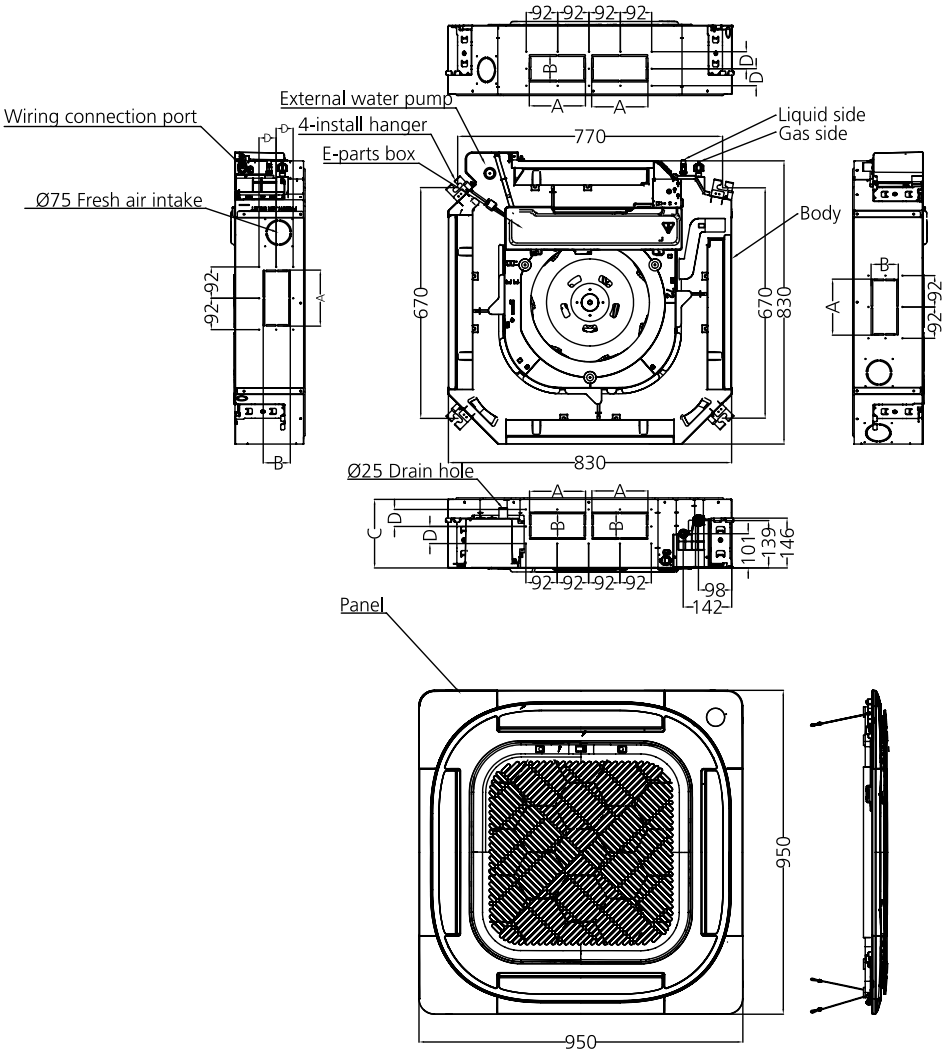

Capacity (Btu/h)	unit	A	B	C	D
24k	mm	165	80	205	50
	inch	6.50	3.15	8.07	1.97

Console Type

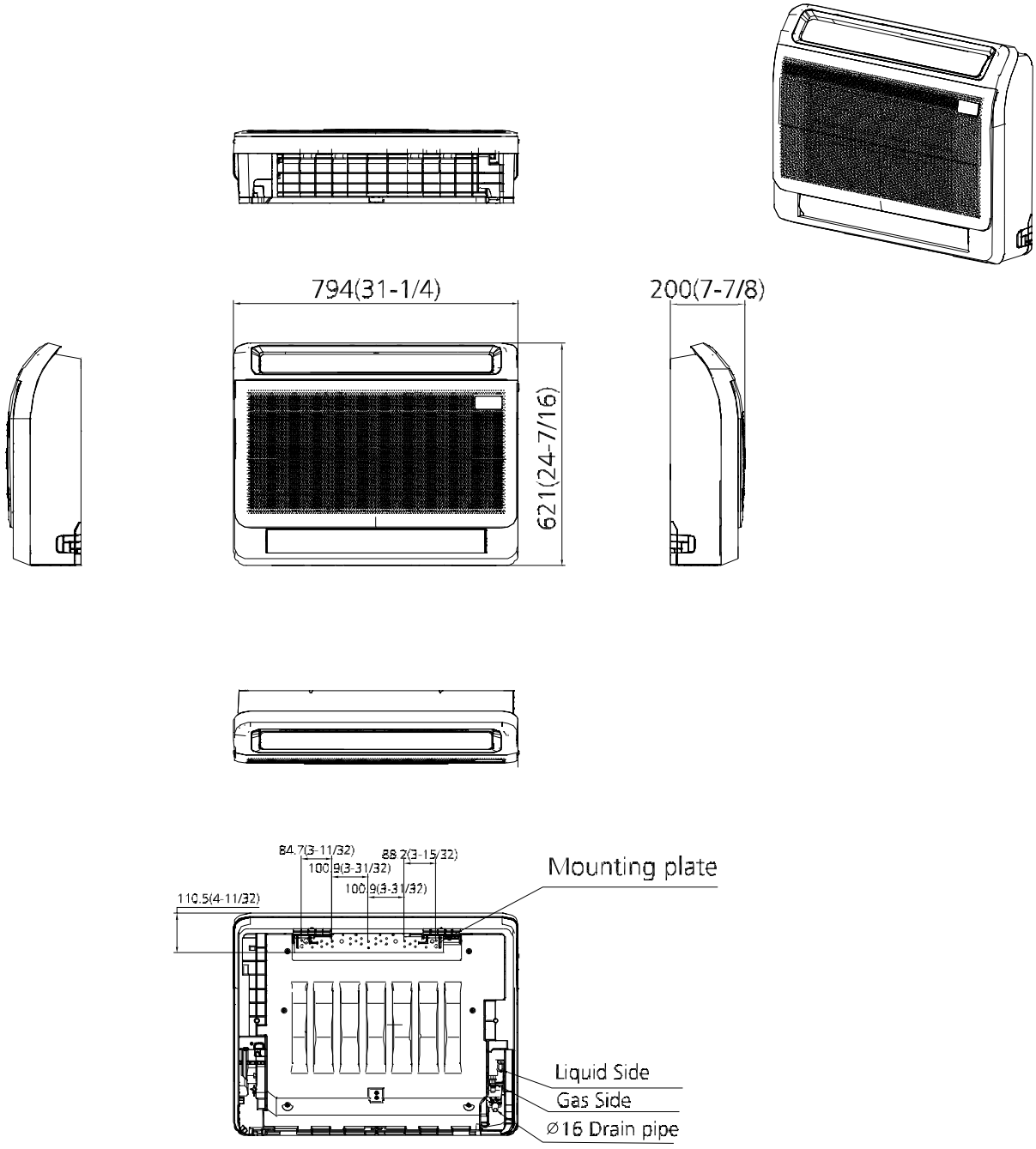

Forest

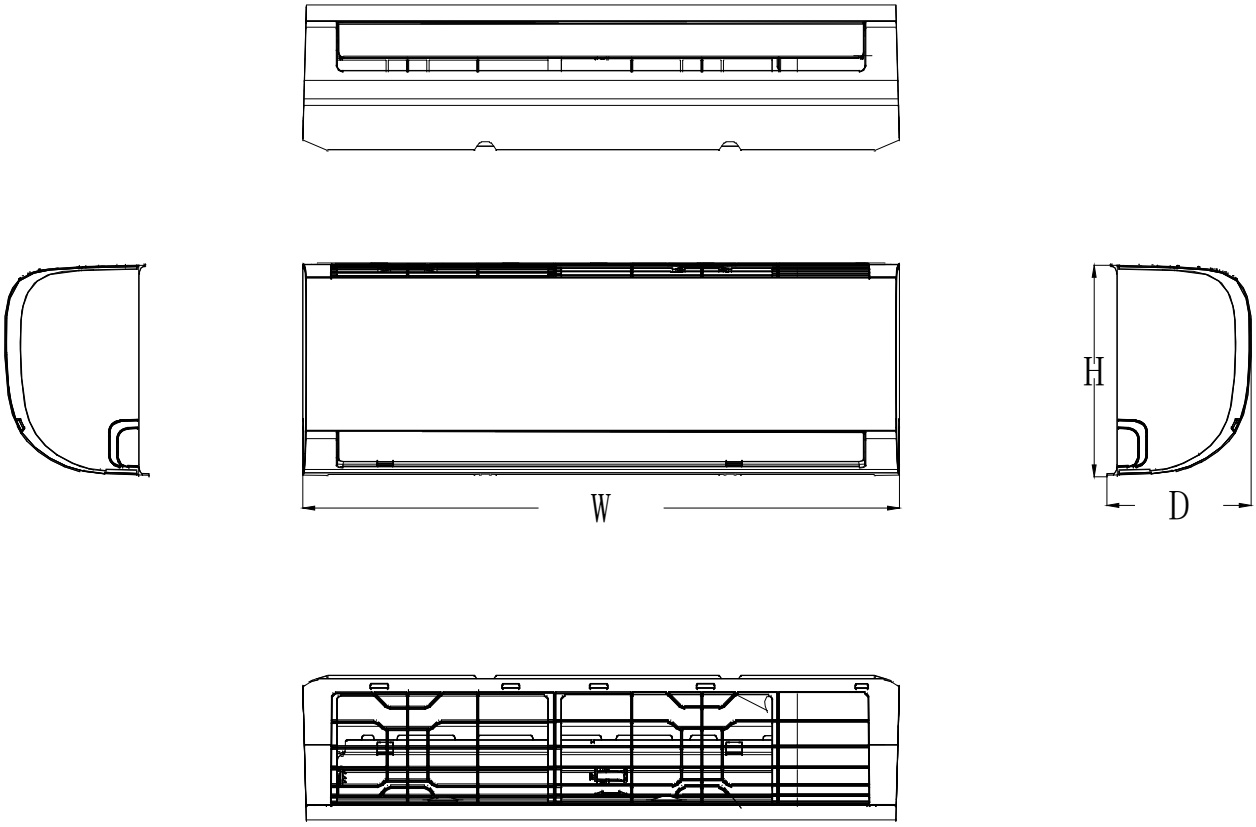

Capacity(Btu/h)	unit	W(mm)	D(mm)	H(mm)
9k/12k	mm	805	194	285
	inch	31.7	7.6	11.2
18k	mm	957	213	302
	inch	37.7	8.4	11.9
24k	mm	1040	220	327
	inch	40.9	8.7	12.9

Aurora

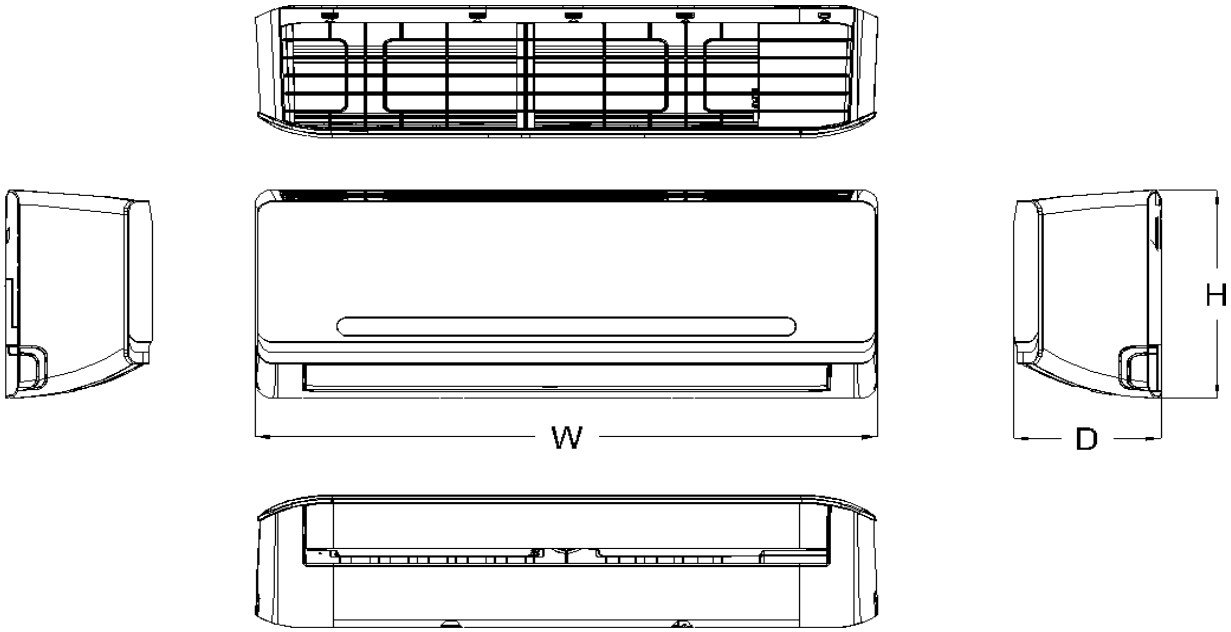

Capacity(Btu/h)	W(mm)	D(mm)	H(mm)
9k	722	187	290
12k	802	189	297
18k	965	215	319
24k	1080	226	335

All Easy

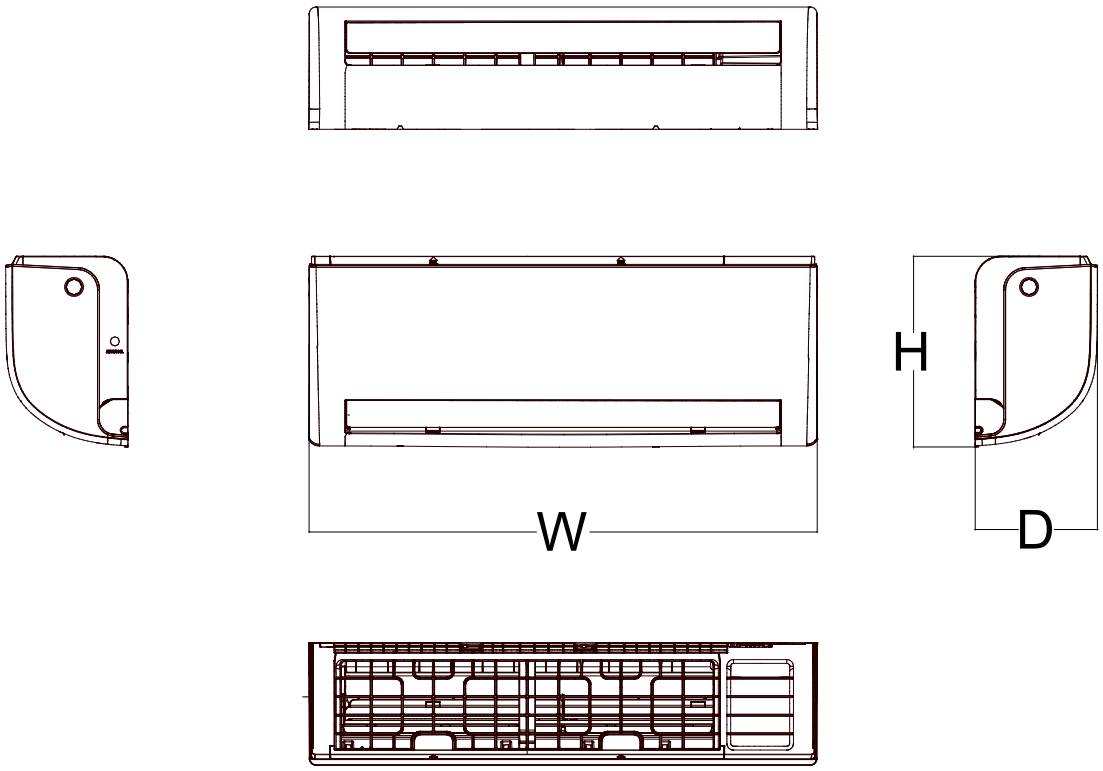

Capacity(Btu/h)	W(mm)	D(mm)	H(mm)
9k/12k	805	193	302
18k	964	222	325
24k	1106	232	342

XTREME

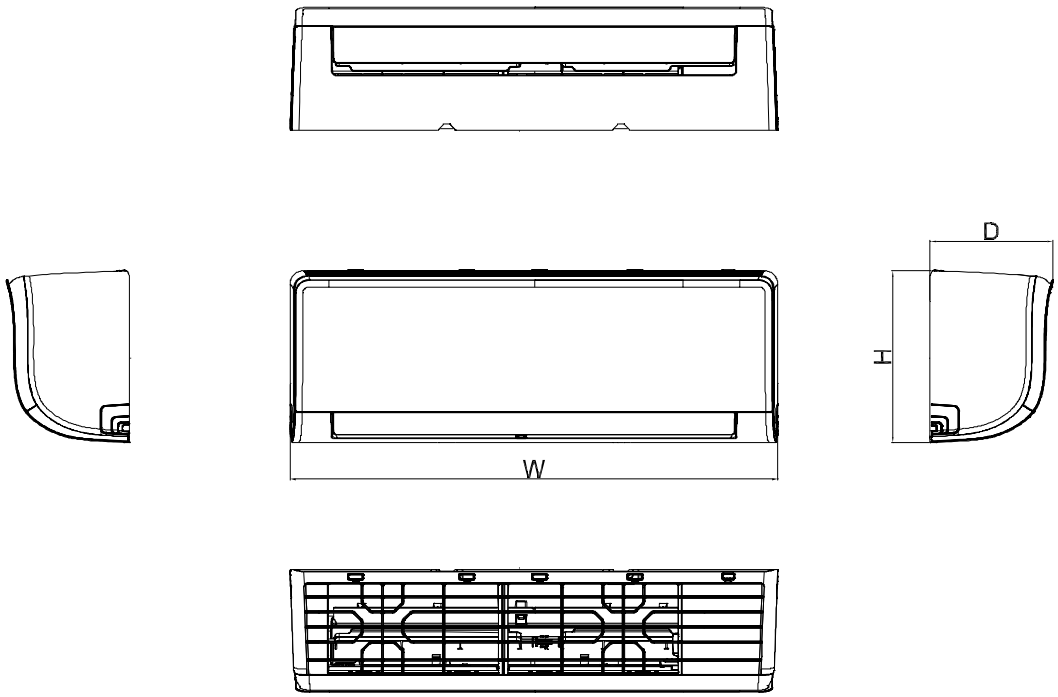

Model	W(mm)	D(mm)	H(mm)
MSAGAU-09HRFNX-QRD0GW	726	210	291
MSAGBU-12HRFNX-QRD0GW MSAGBU-09HRFN8-QRD1GW(GA) MSAGBU-12HRFN8-QRD1GW(GA)	835	208	295
MSAGCU-18HRFNX-QRD0GW	969	241	320
MSAGDU-24HRFN8-QRD0GW	1083	244	336

BREEZELESS

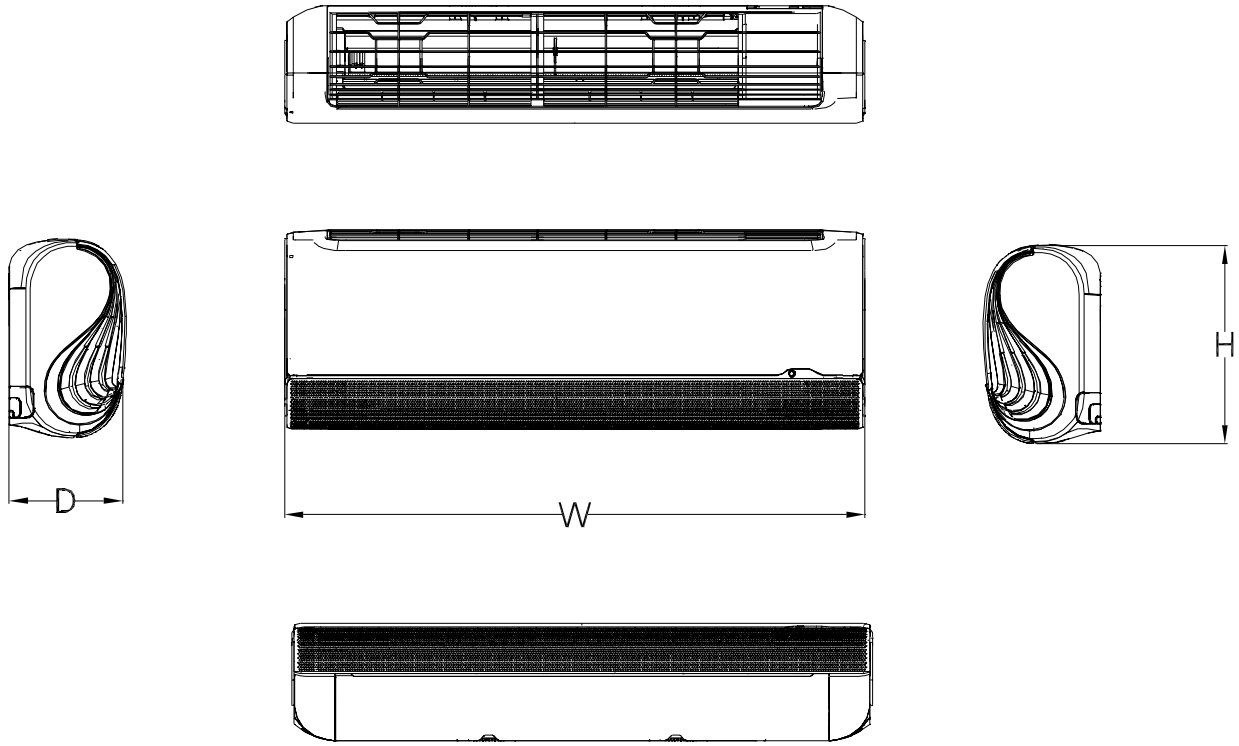

Model	W(mm)	D(mm)	H(mm)
MSFAAU-09HRFN8-QRD6GW	940	193	325
MSFAAU-12HRFN8-QRD6GW			

Glory Pro

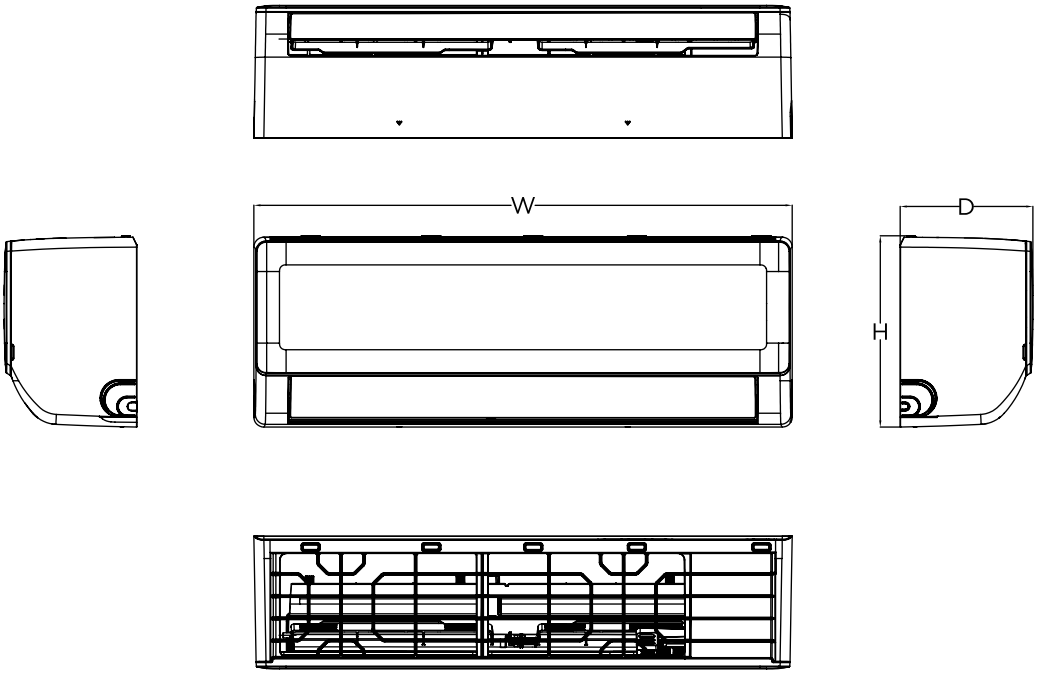

Capacity (Btu/h)	Unit	W	D	H
7k/9k	mm	723	199	286
12k	mm	813	201	289
18k	mm	975	218	308
24k	mm	1055	231	330

BREEZELESS E

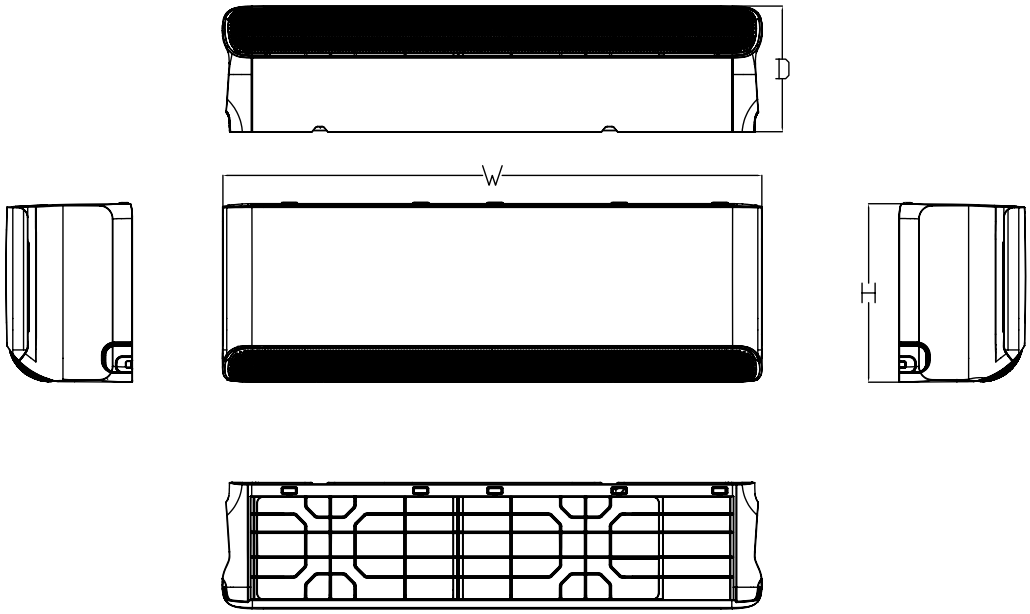

Capacity (Btu/h)	Unit	W	D	H
12k	mm	812	299	199
	inch	31.97	11.77	7.83
18k	mm	968	225	320
	inch	38.11	8.86	12.6
24k	mm	1030	238	338
	inch	40.55	9.37	13.31

5.2 Outdoor Unit

M2OG-14HFN8-Q, M2OC-18HFN8-Q, M2OD-18HFN8-Q

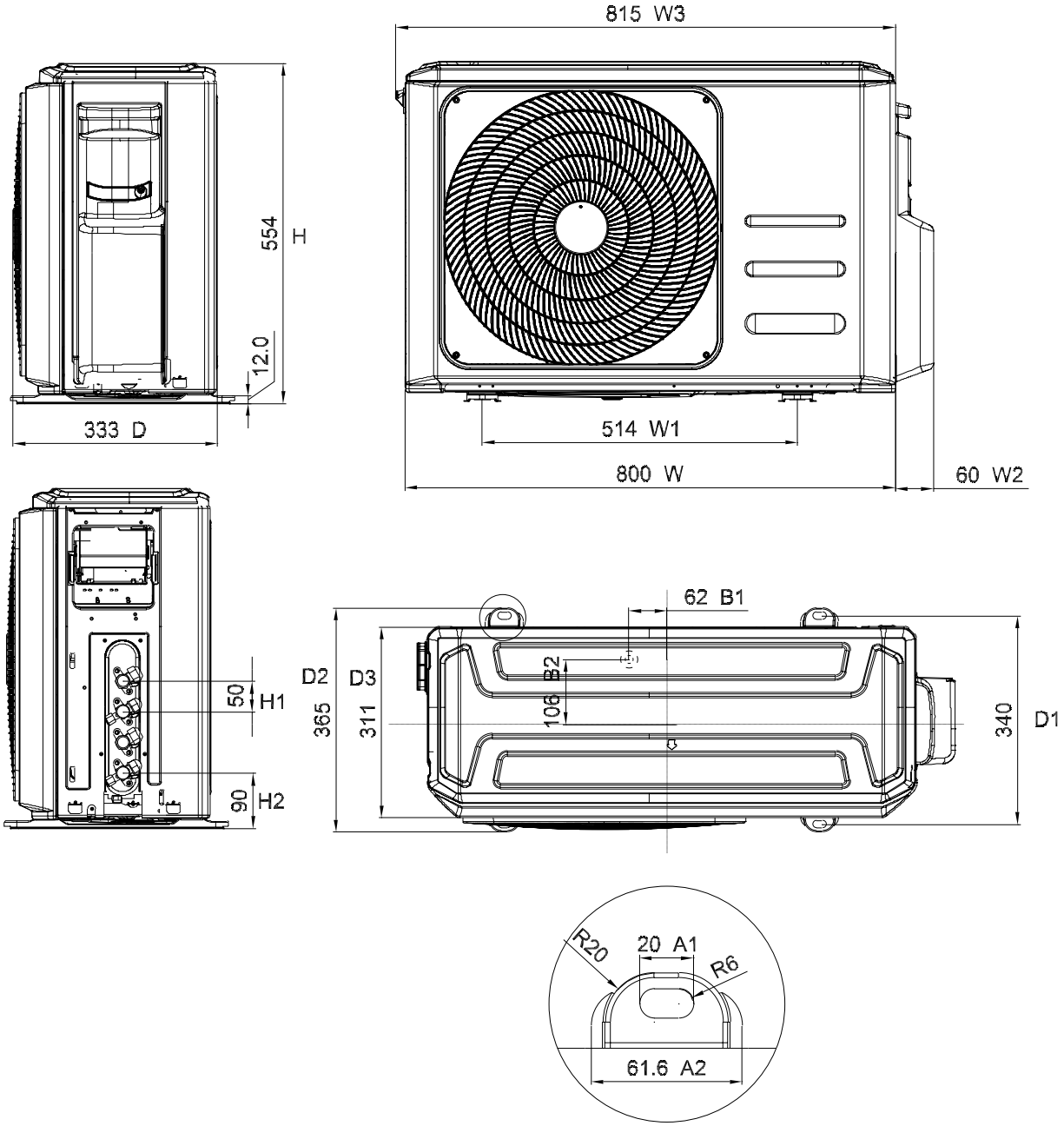

M2OF-18HFN8-Q

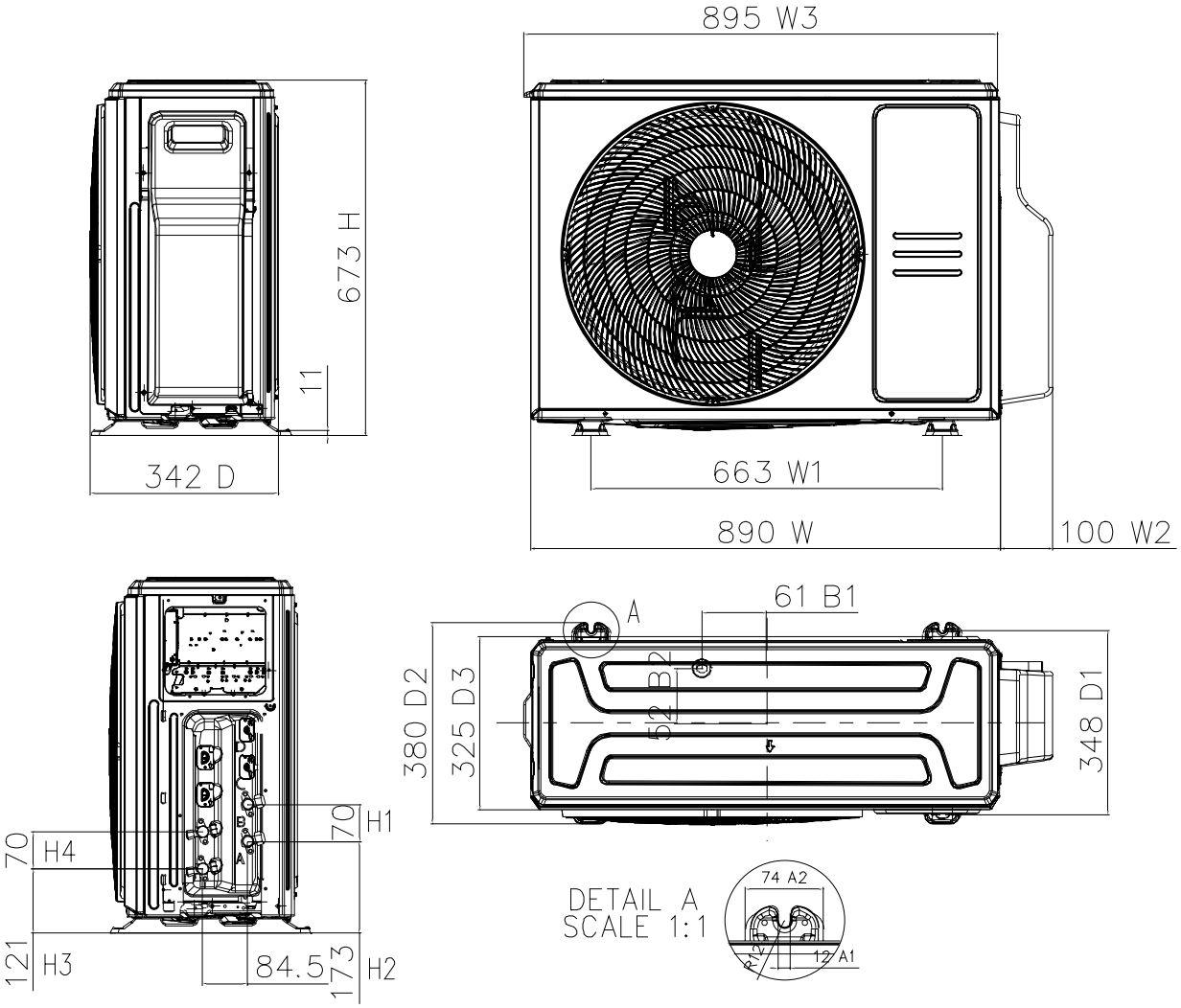

M3OC-27HFN8-Q

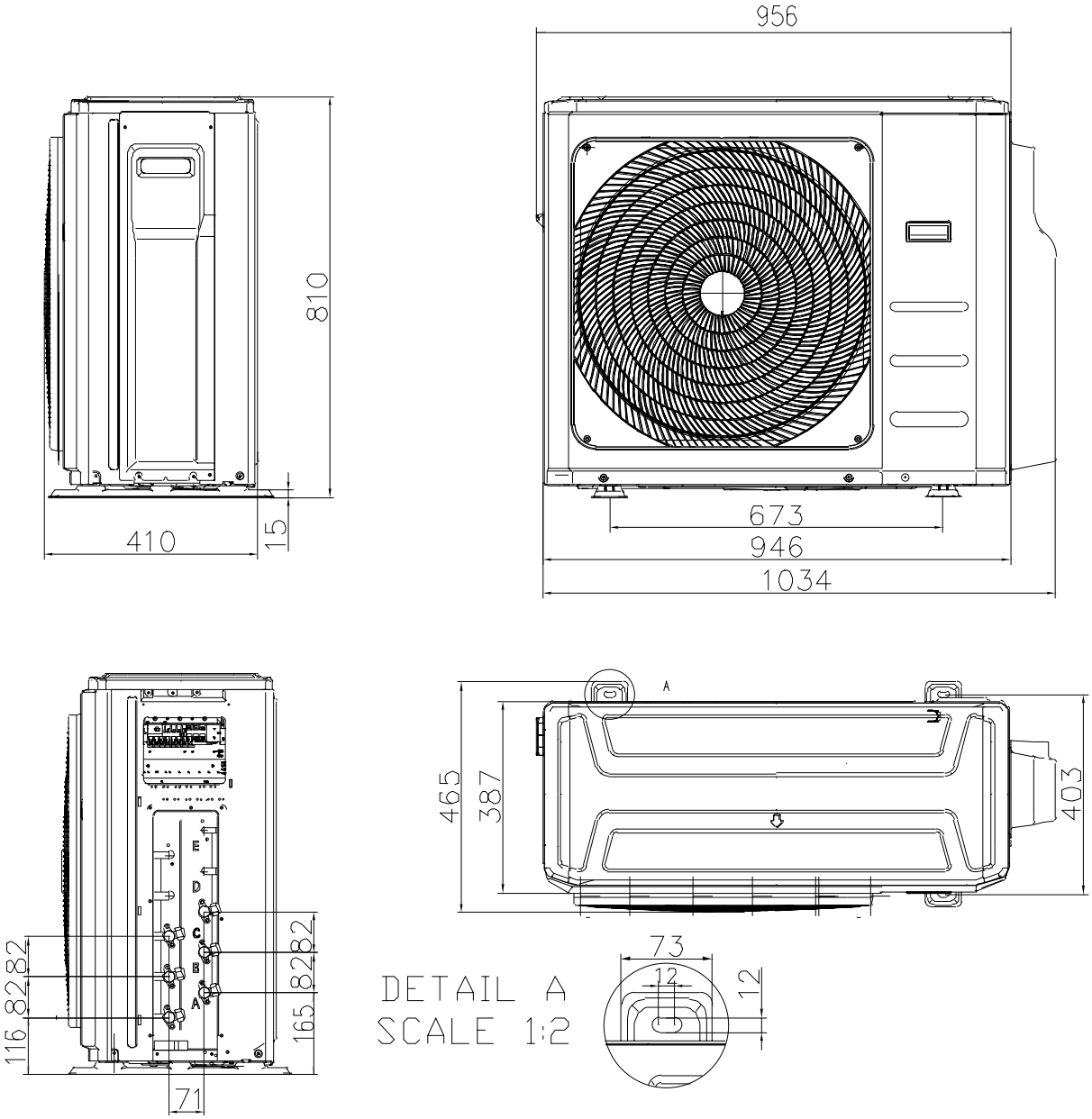

M3OF-21HFN8-Q, M3OE-27HFN8-Q, M3OF-27HFN8-Q

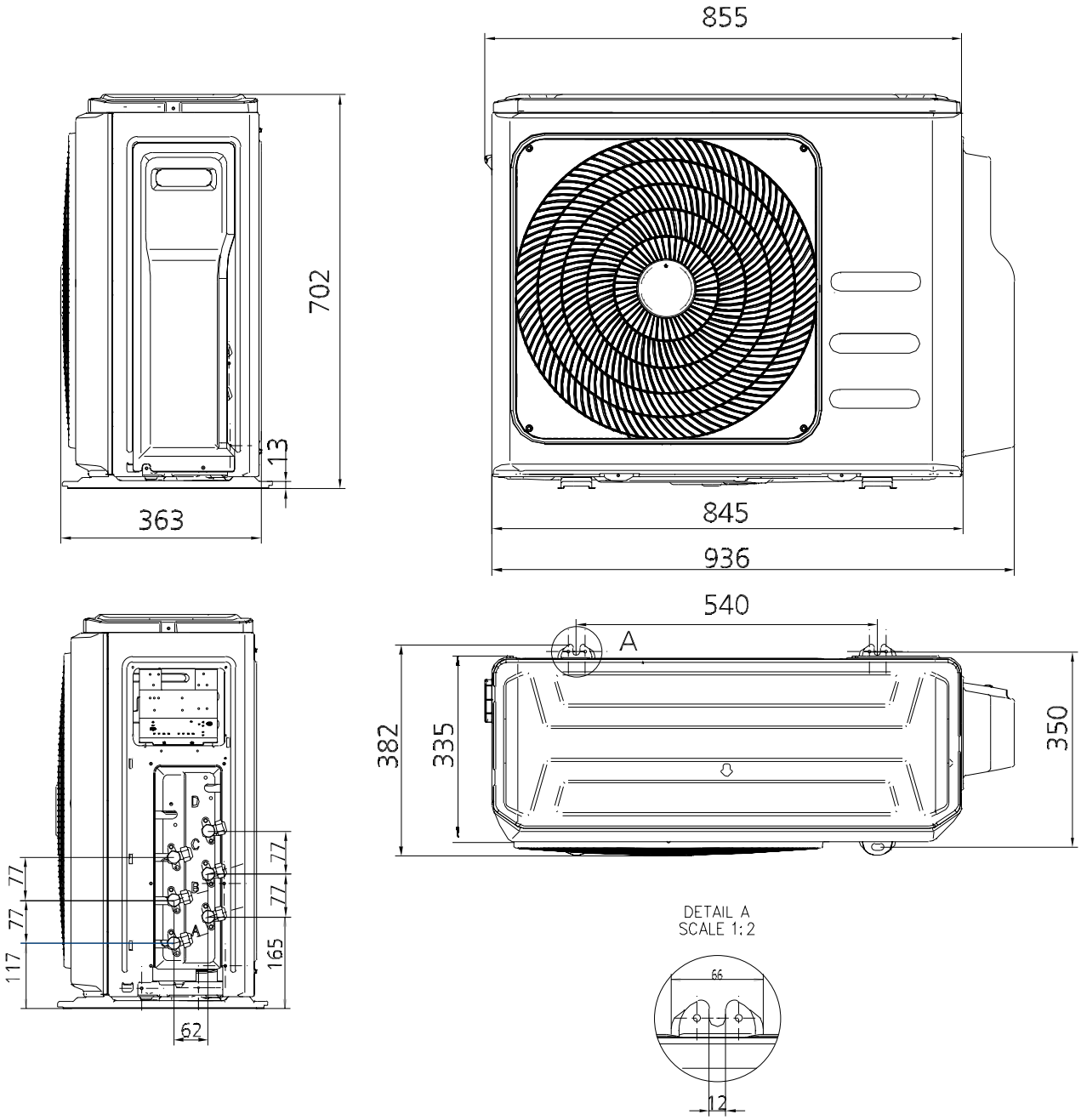

M4OE-28HFN8-Q, M4OB-36HFN8-Q, M4OC-36HFN8-Q, M4OA-27HFN8-Q(HRU), M4OB-27HFN8-Q(HRU)

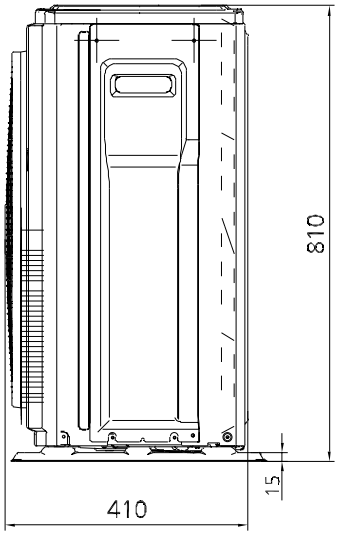

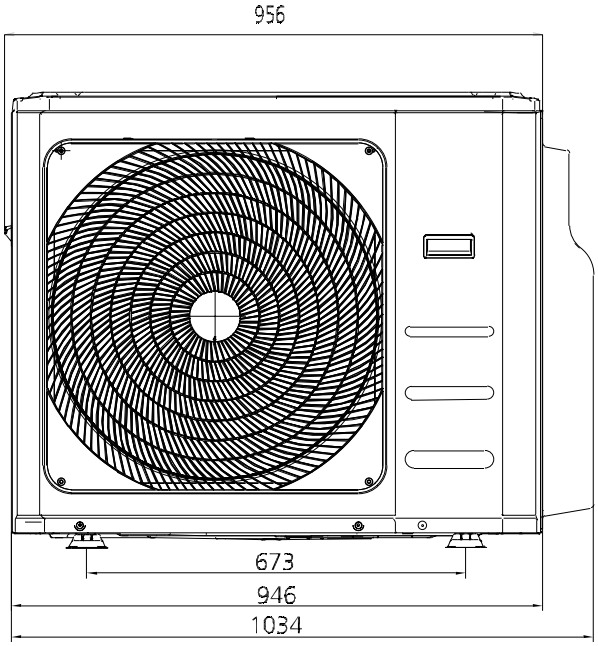

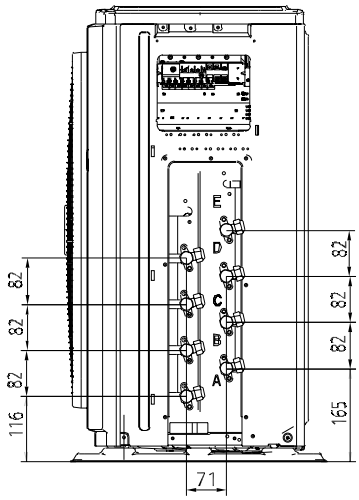

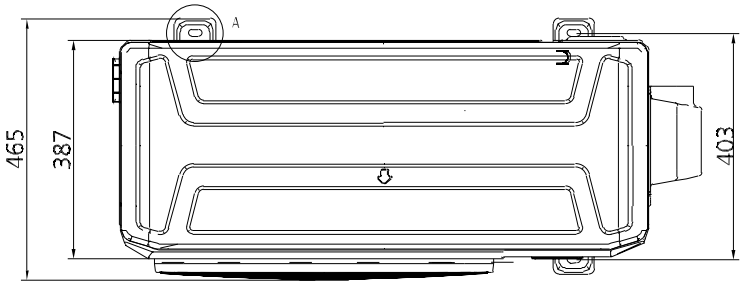

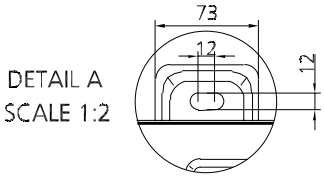

M5OD-42HFN8-Q, M5OE-42HFN8-Q

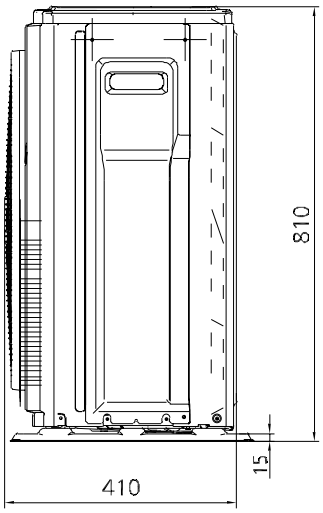

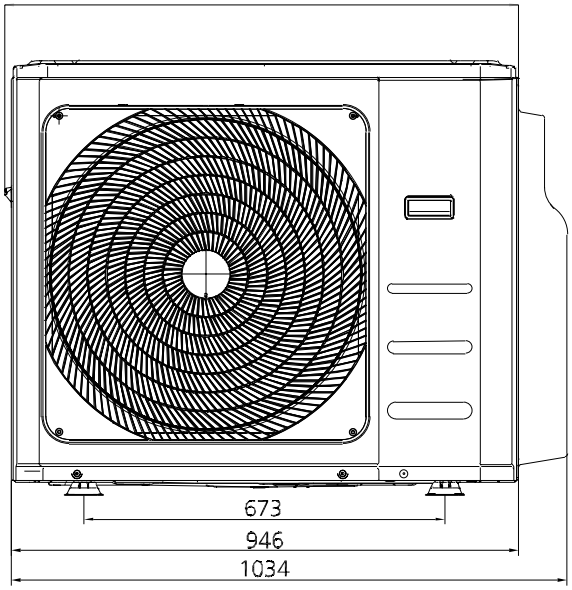

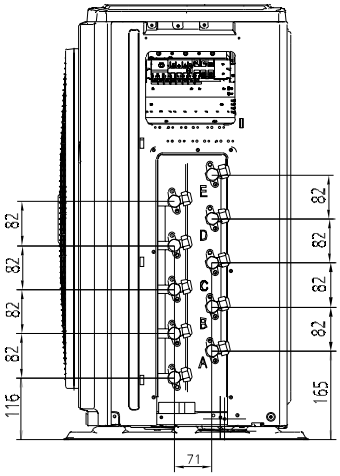

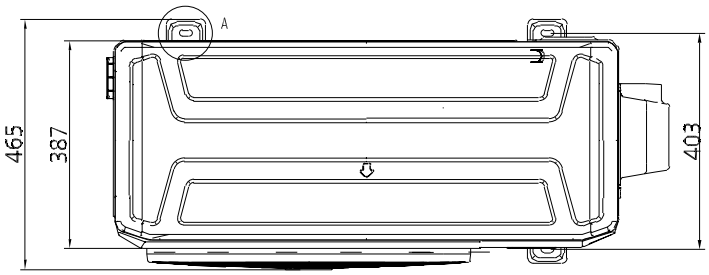

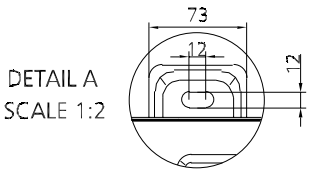

M2OH-14HFN8-Q, M2OE-18HFN8-Q

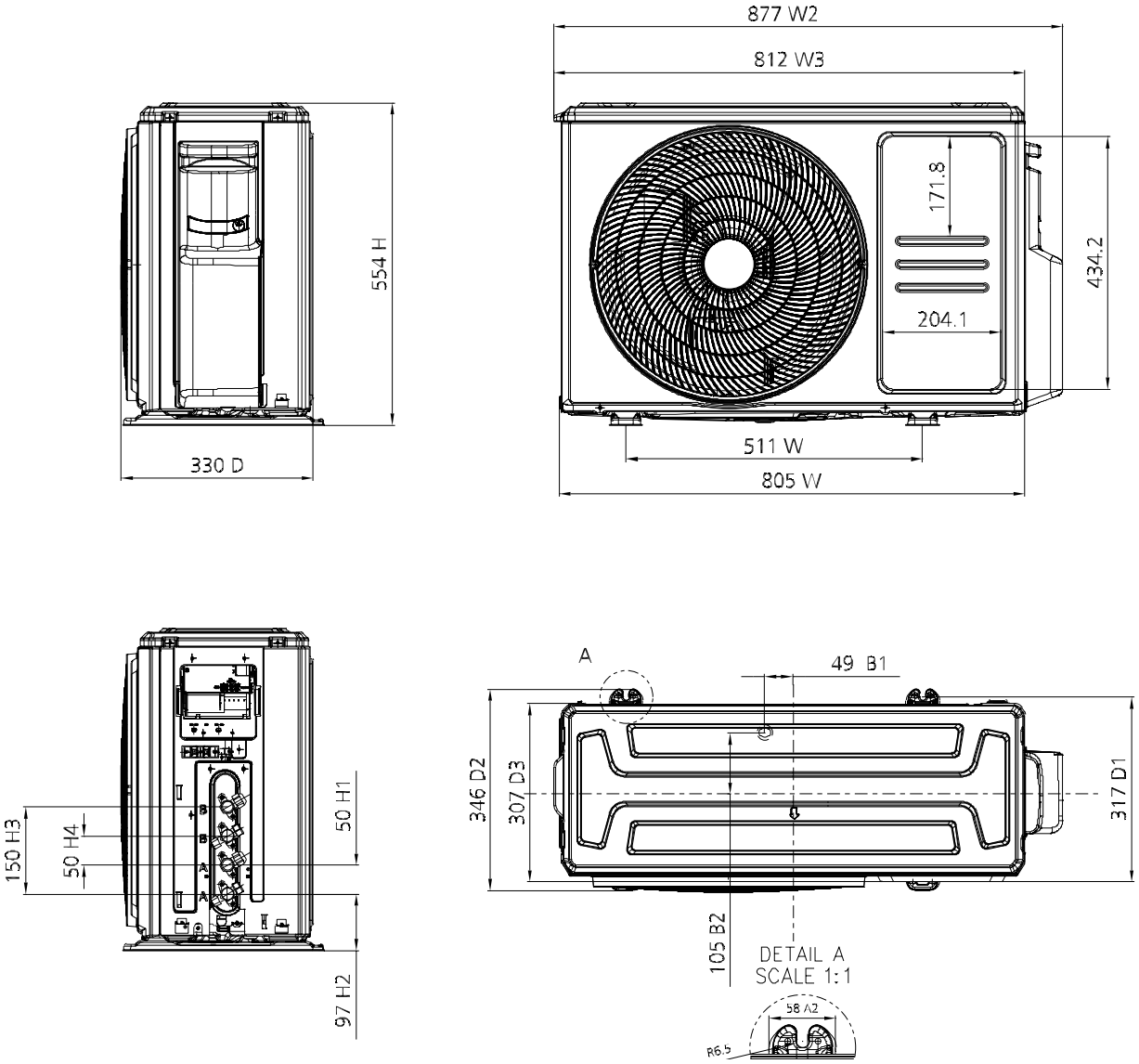

M3OA-18HFN8-Q

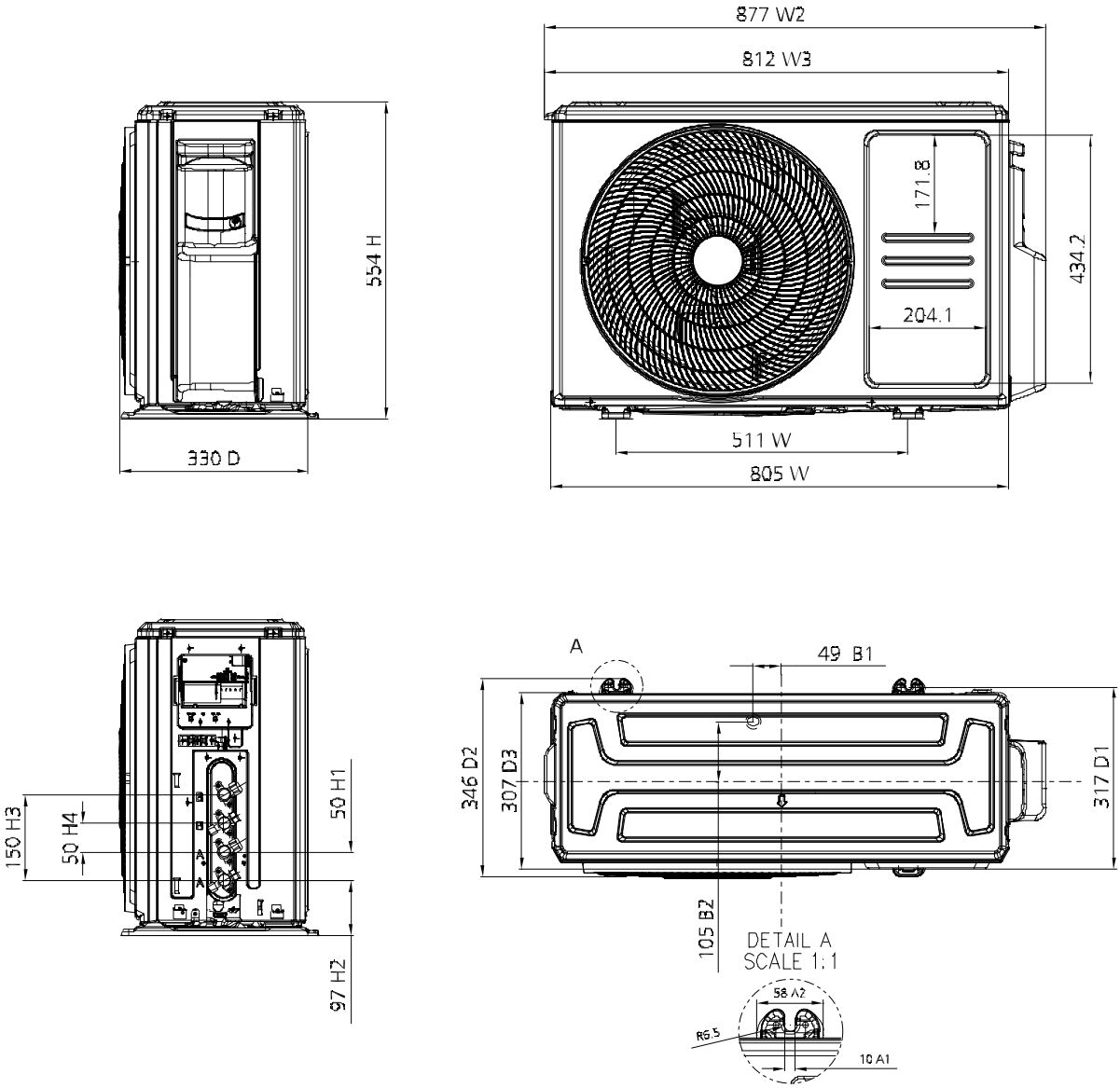

M3OG-21HFN8-Q, M3OA-27HFN8-Q, M3OB-27HFN8-Q, M3OA-18HFN8-Q(HRU)

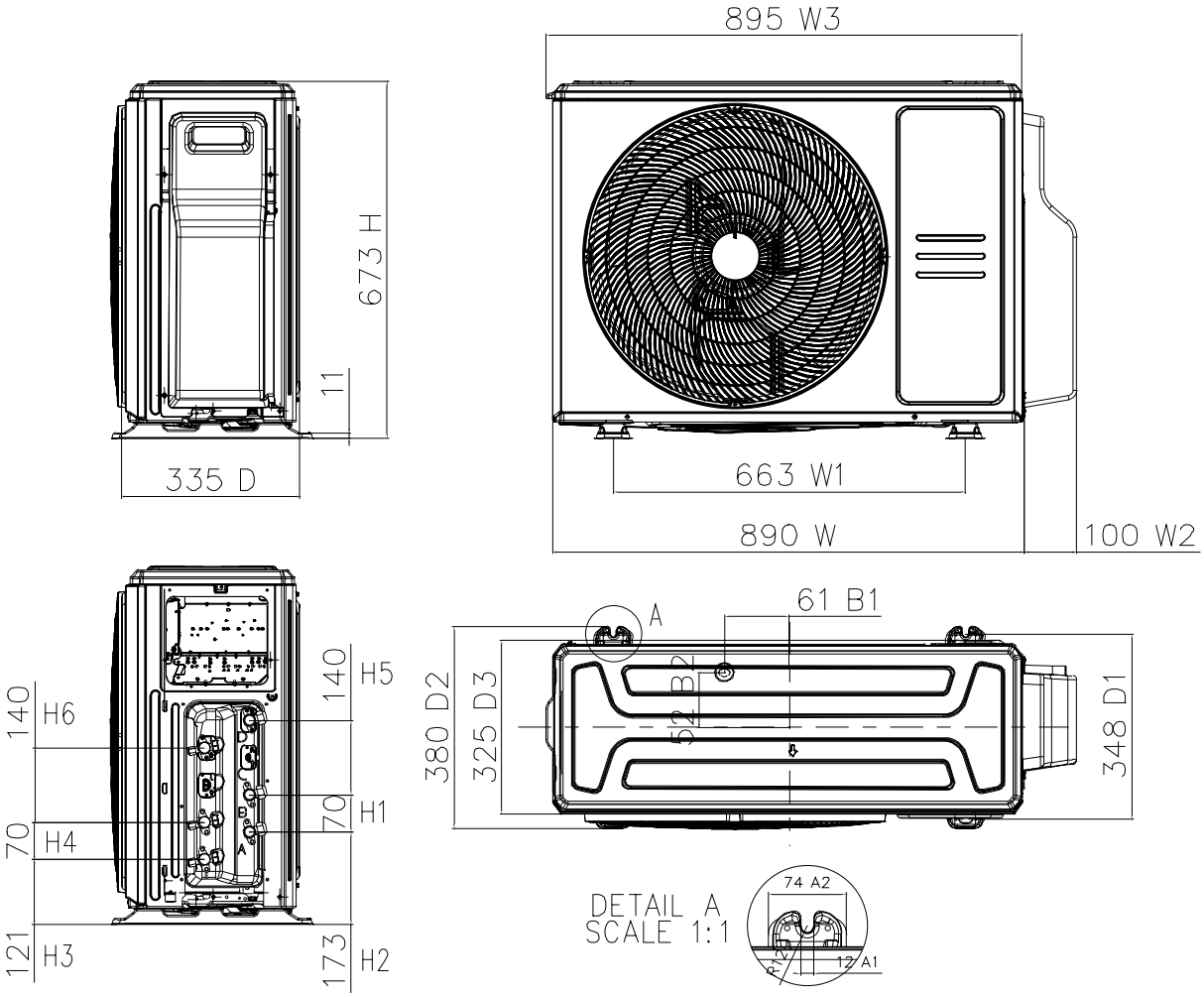

M4OA-24HFN8-Q

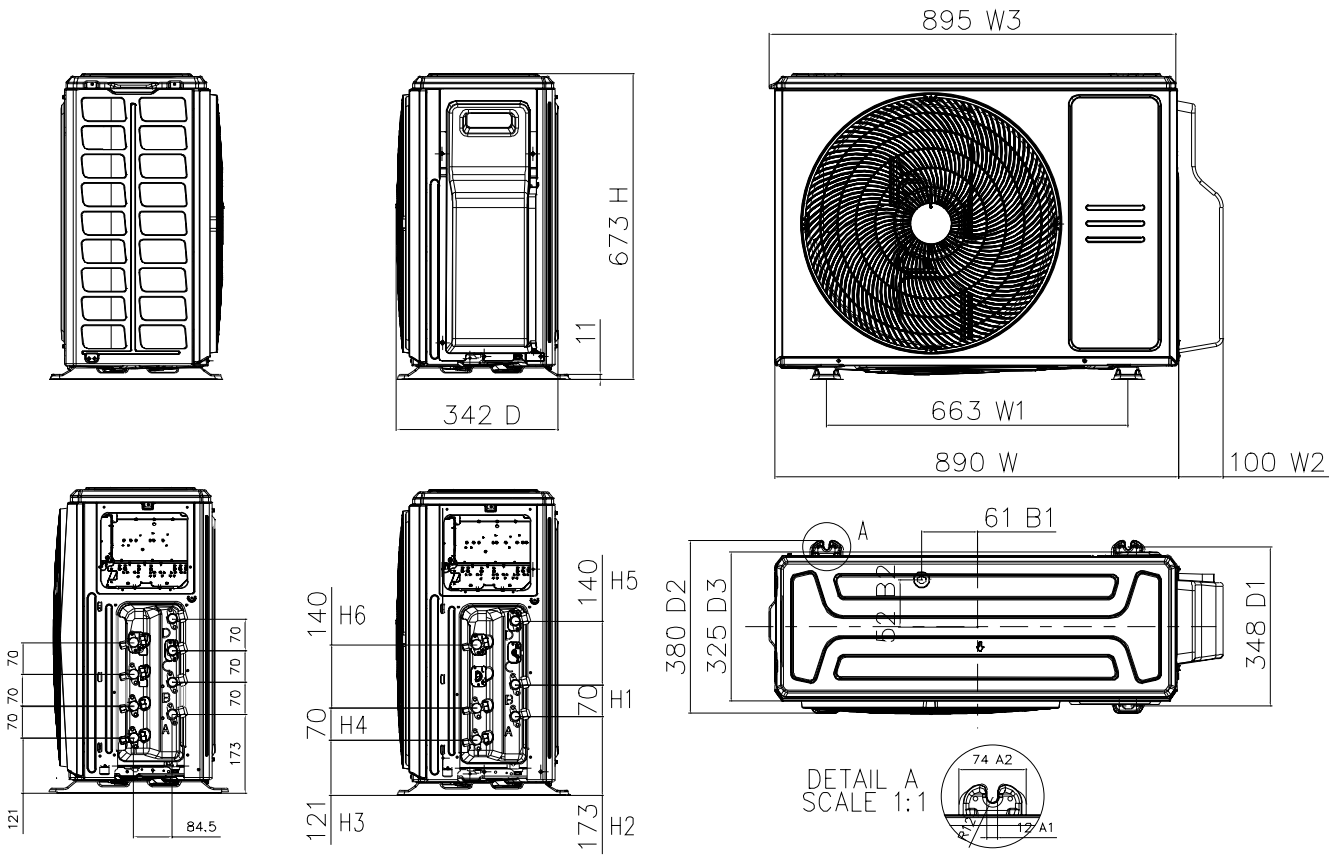

6. Air Velocity and Temperature Distributions

Compact Cassette Type -7k, 9k &12k

Discharge Angle 30°

Cooling airflow velocity distributions

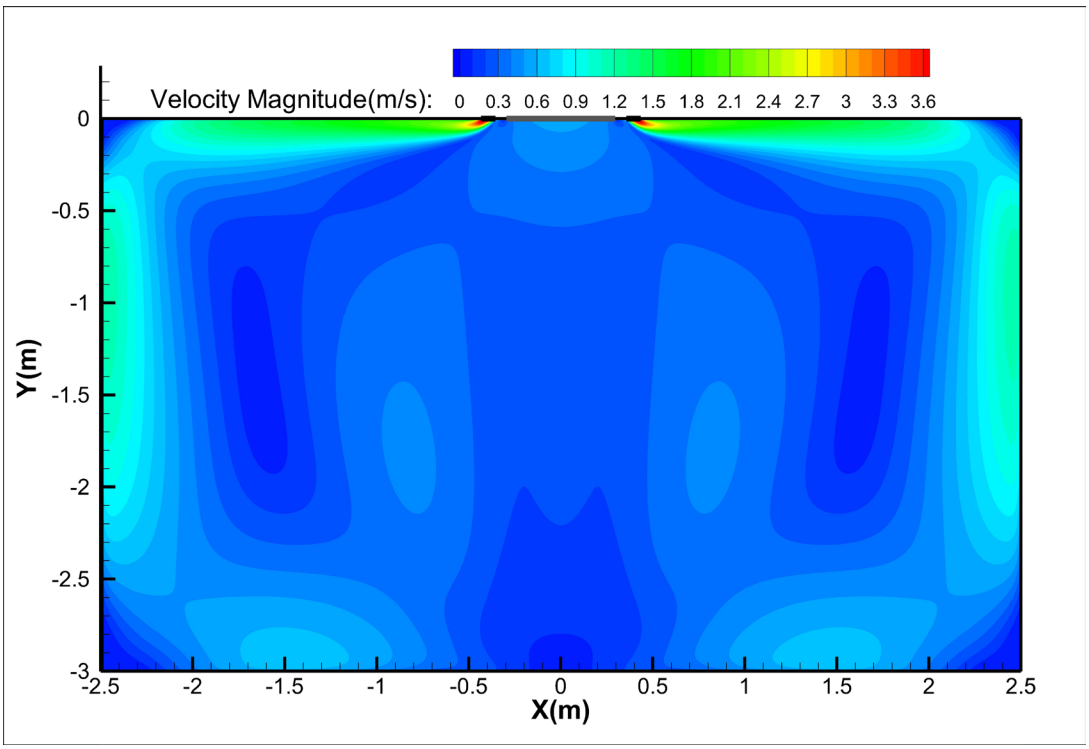

Cooling temperature distributions

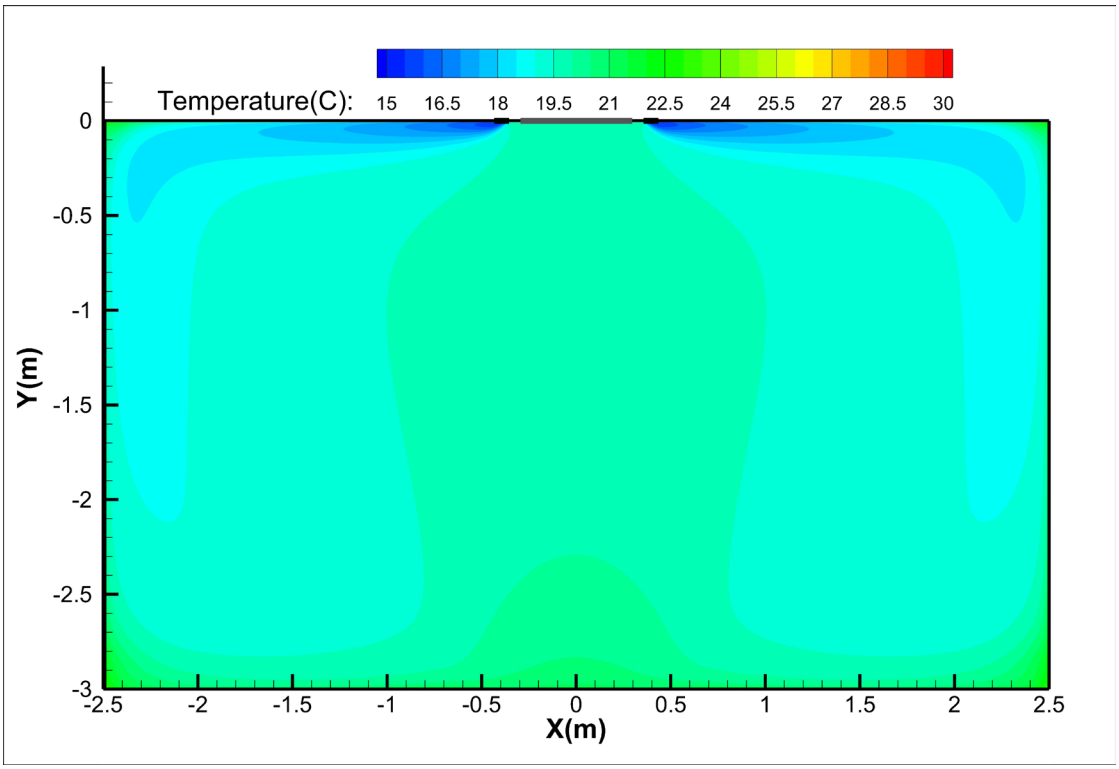

Compact Cassette Type -7k, 9k &12k

Heating airflow velocity distributions

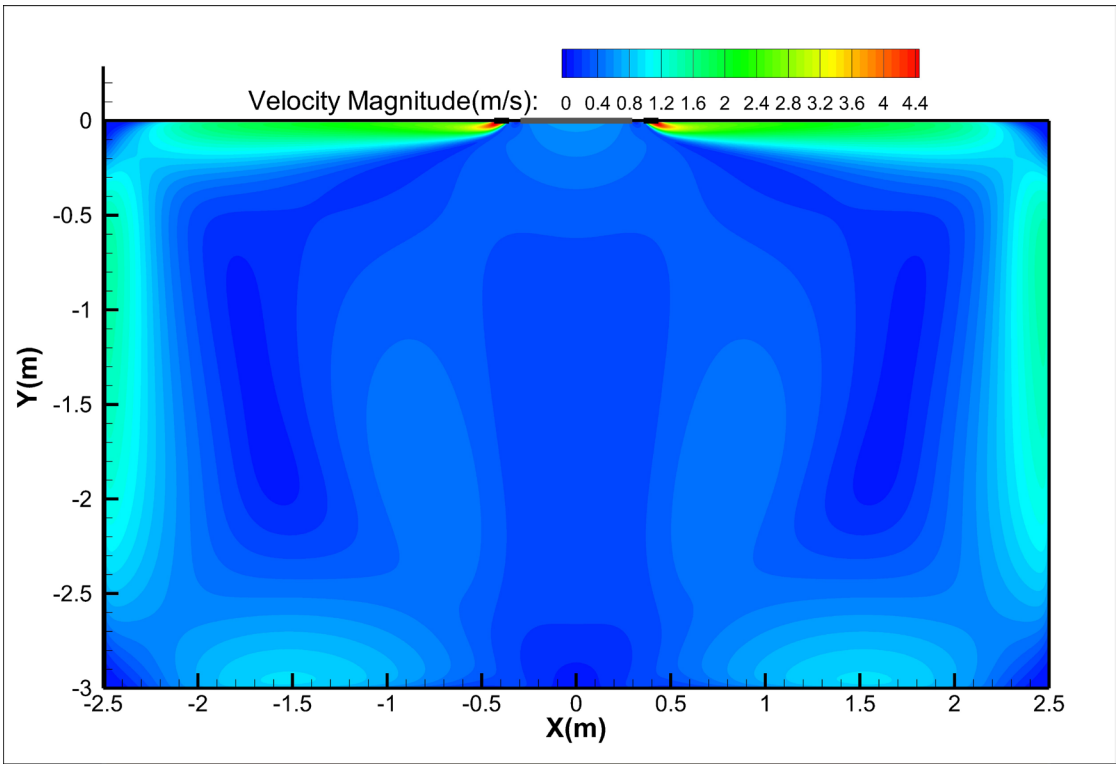

Heating temperature distributions

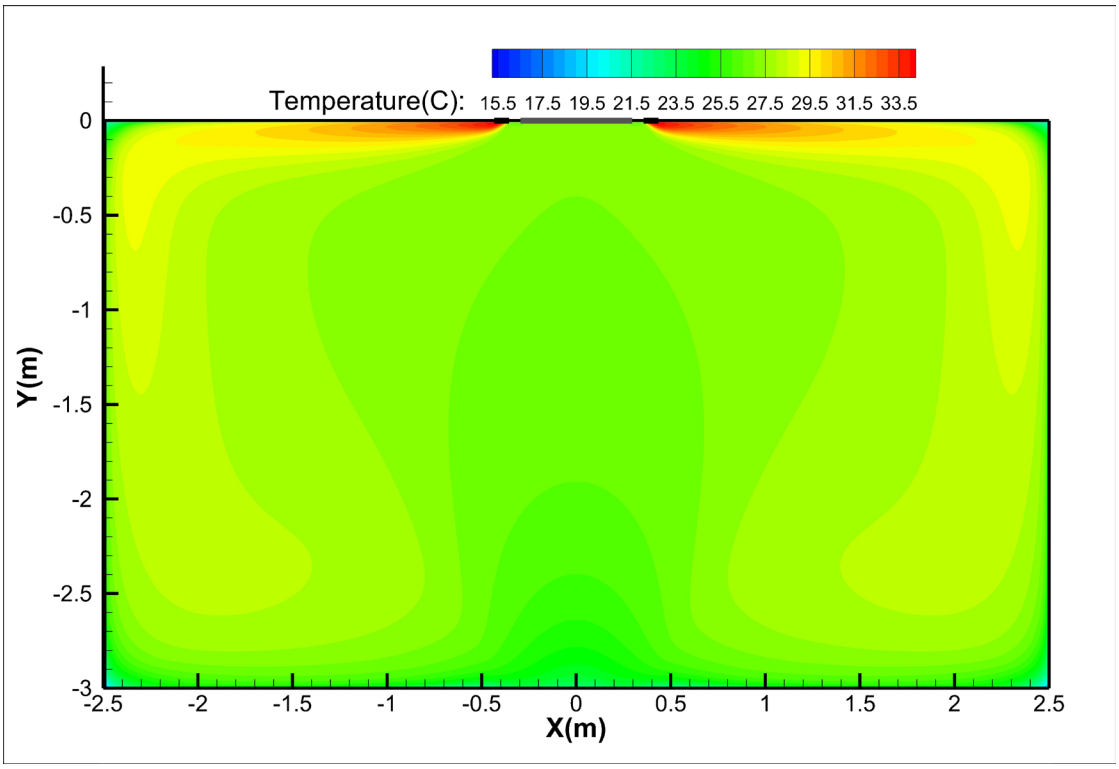

Compact Cassette Type -7k, 9k &12k

Discharge Angle 60°

Cooling airflow velocity distributions

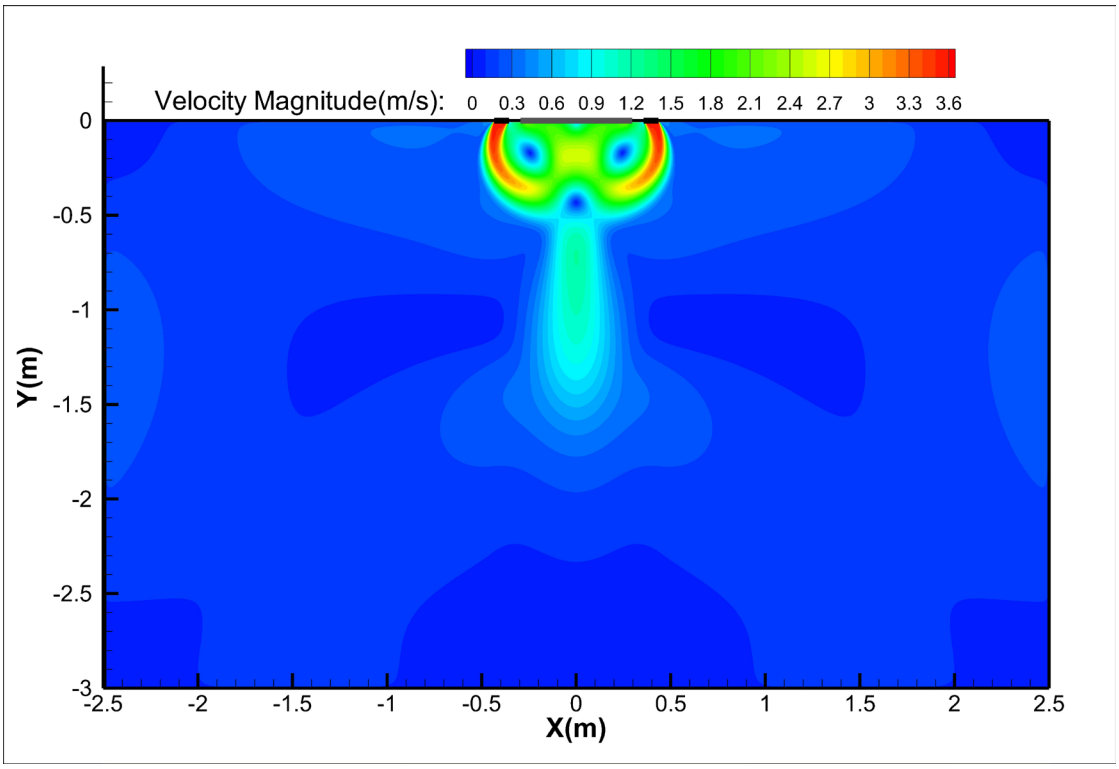

Cooling temperature distributions

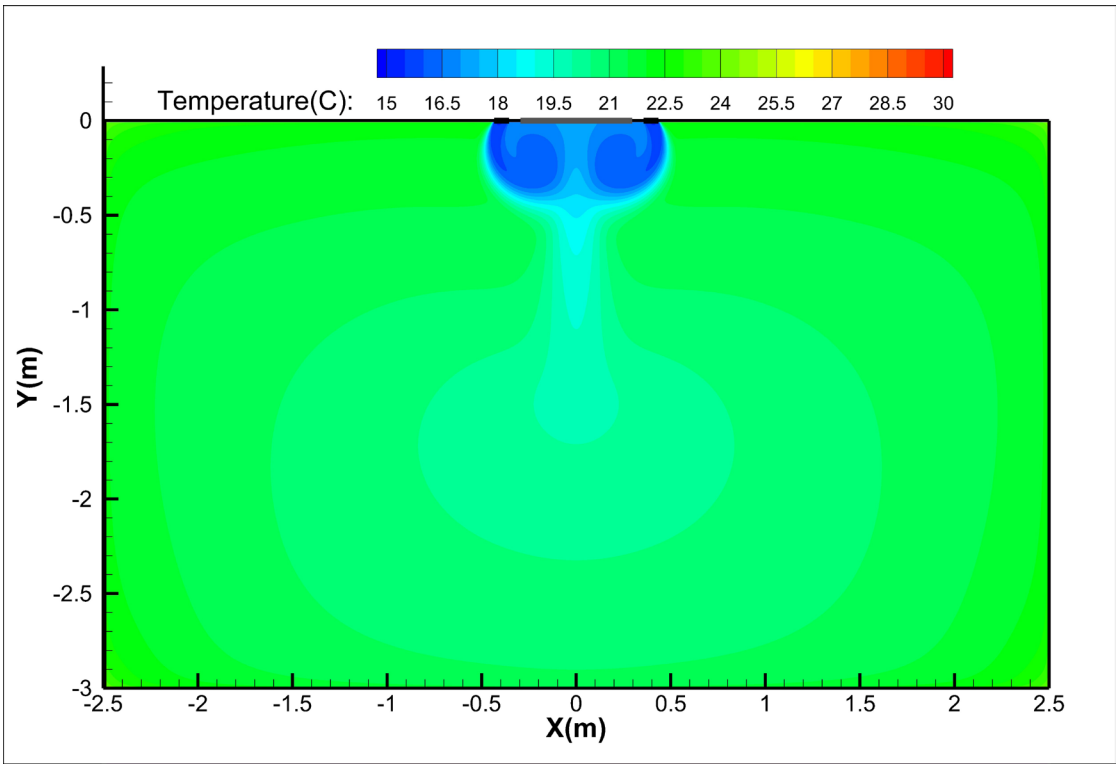

Compact Cassette Type -7k, 9k &12k

Heating airflow velocity distributions

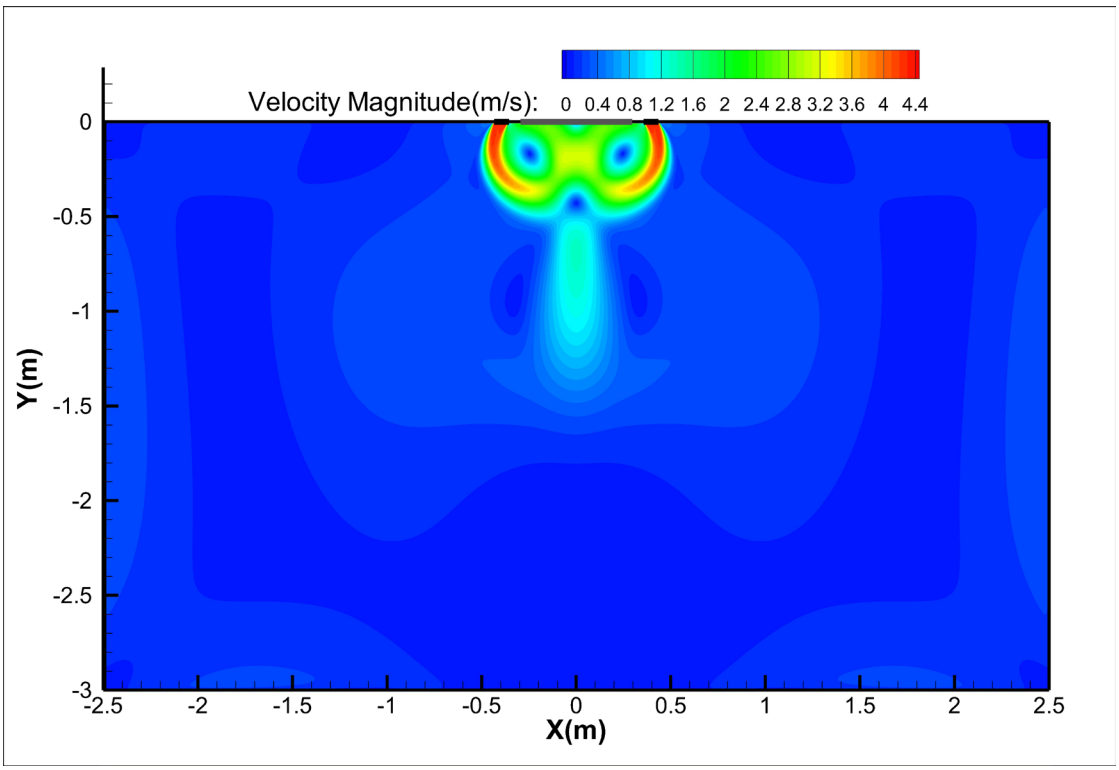

Heating temperature distributions

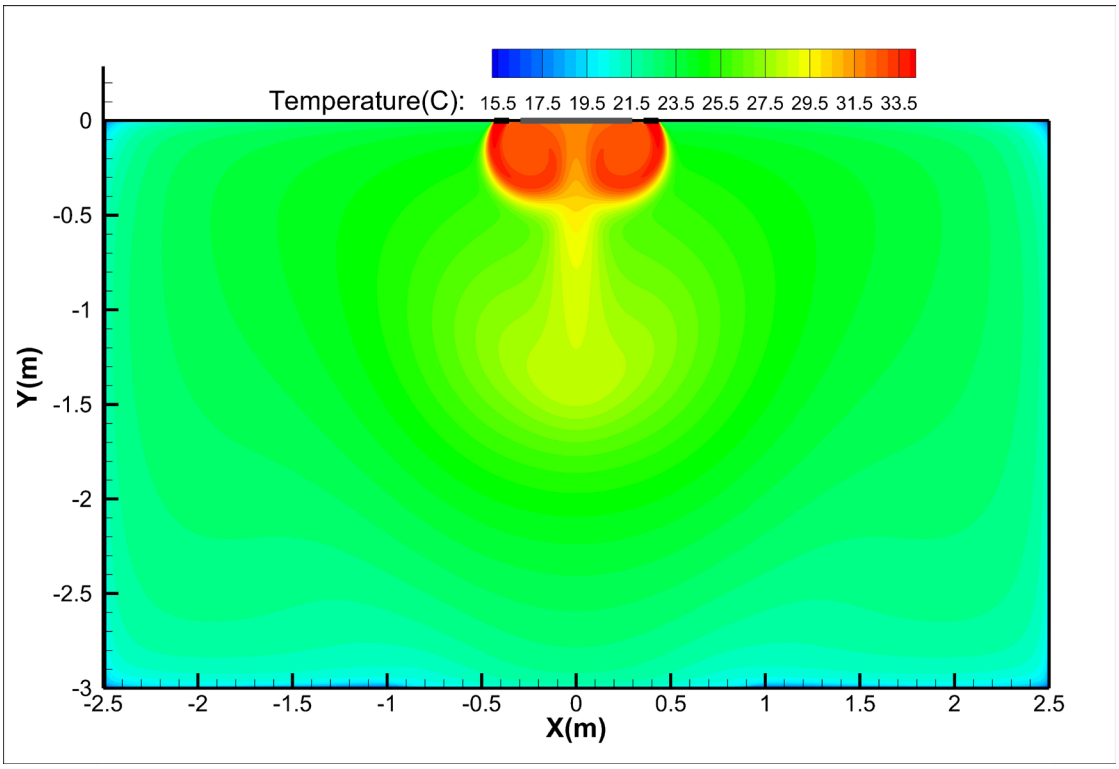

Compact Cassette Type -18k

Discharge Angle 30°

Cooling airflow velocity distributions

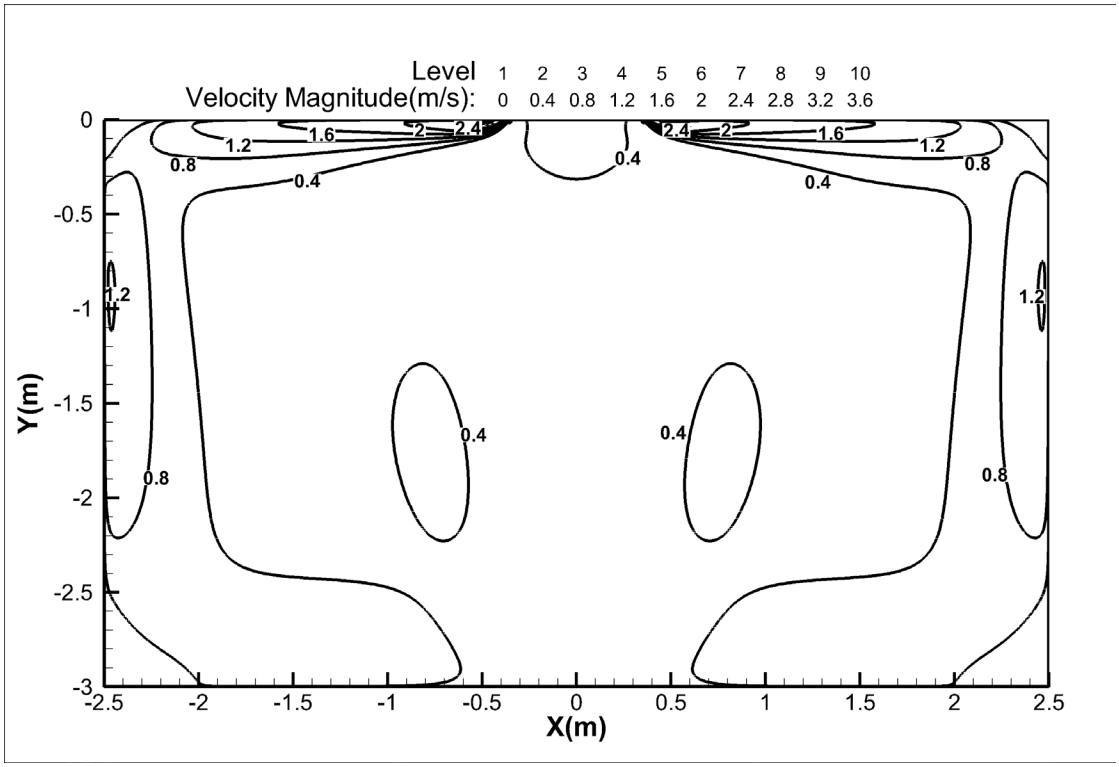

Cooling temperature distributions

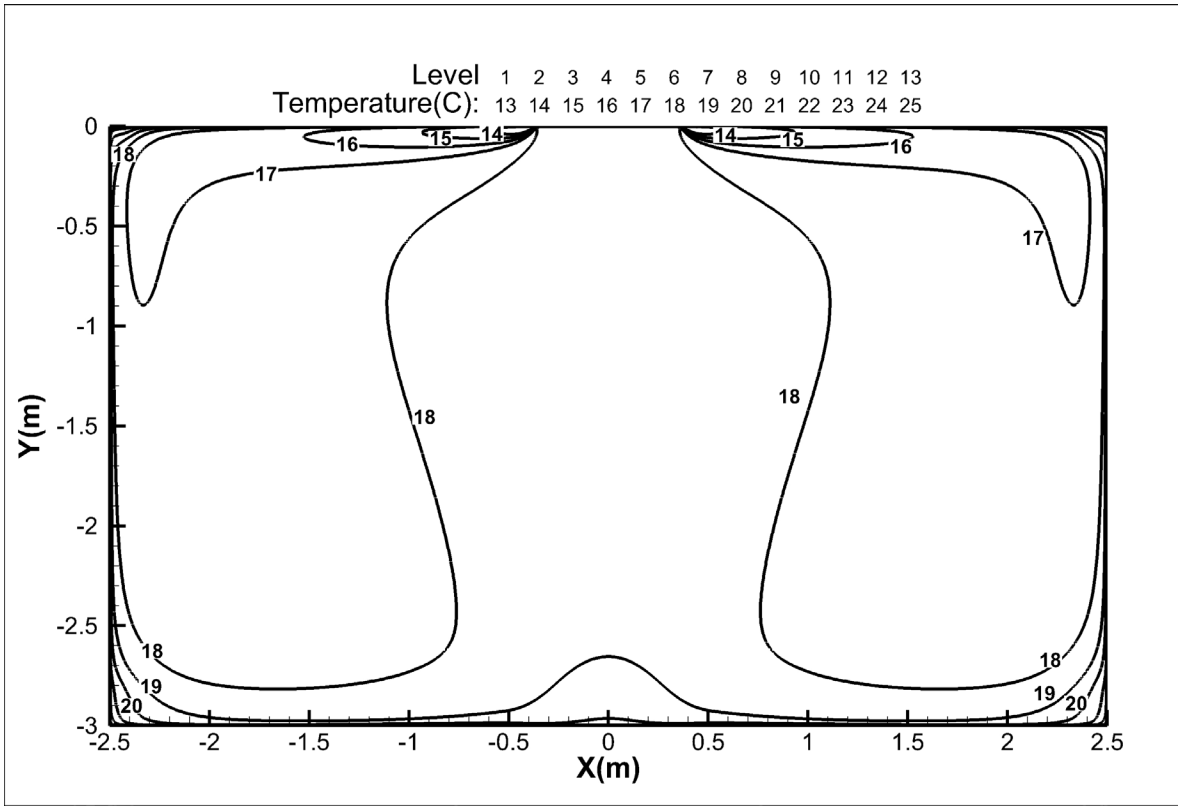

Compact Cassette Type -18k

Heating airflow velocity distributions

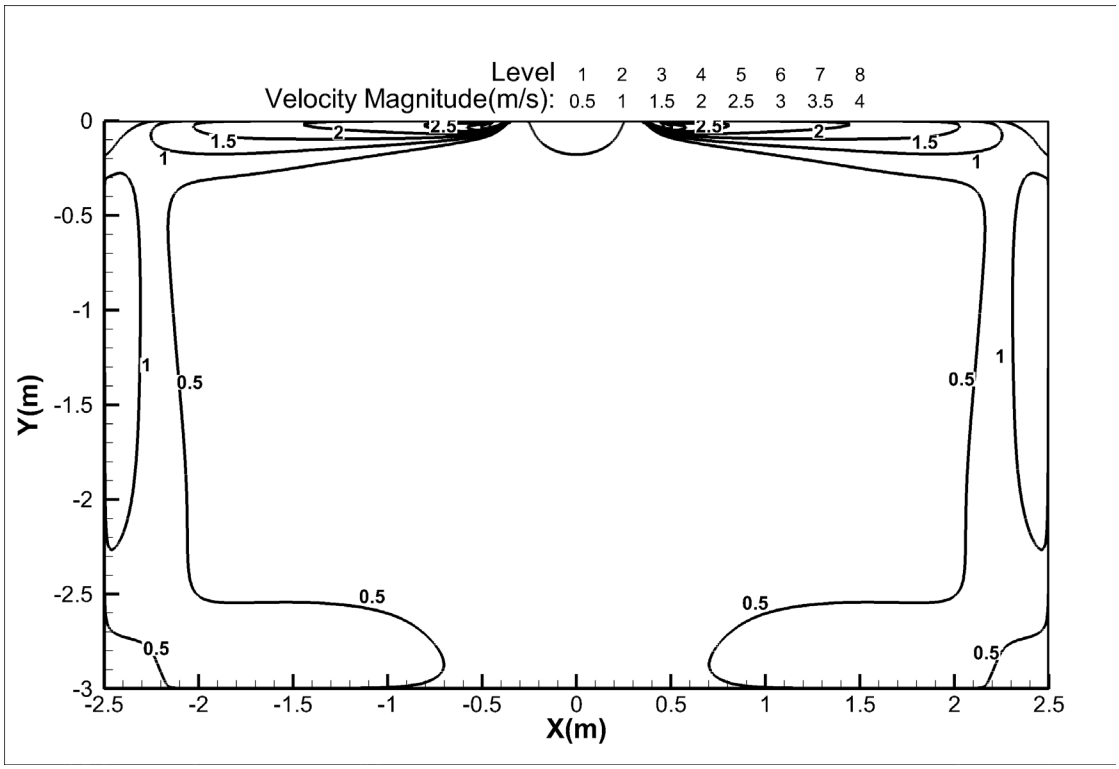

Heating temperature distributions

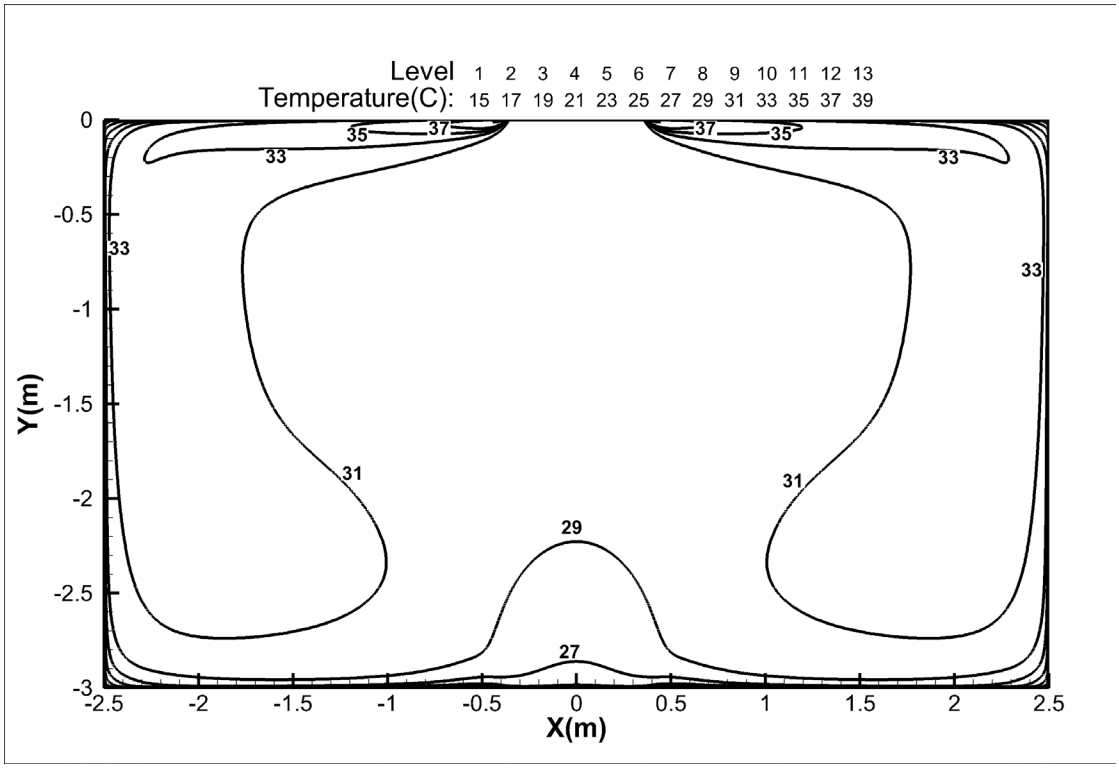

Compact Cassette Type -18k

Discharge Angle 60°

Cooling airflow velocity distributions

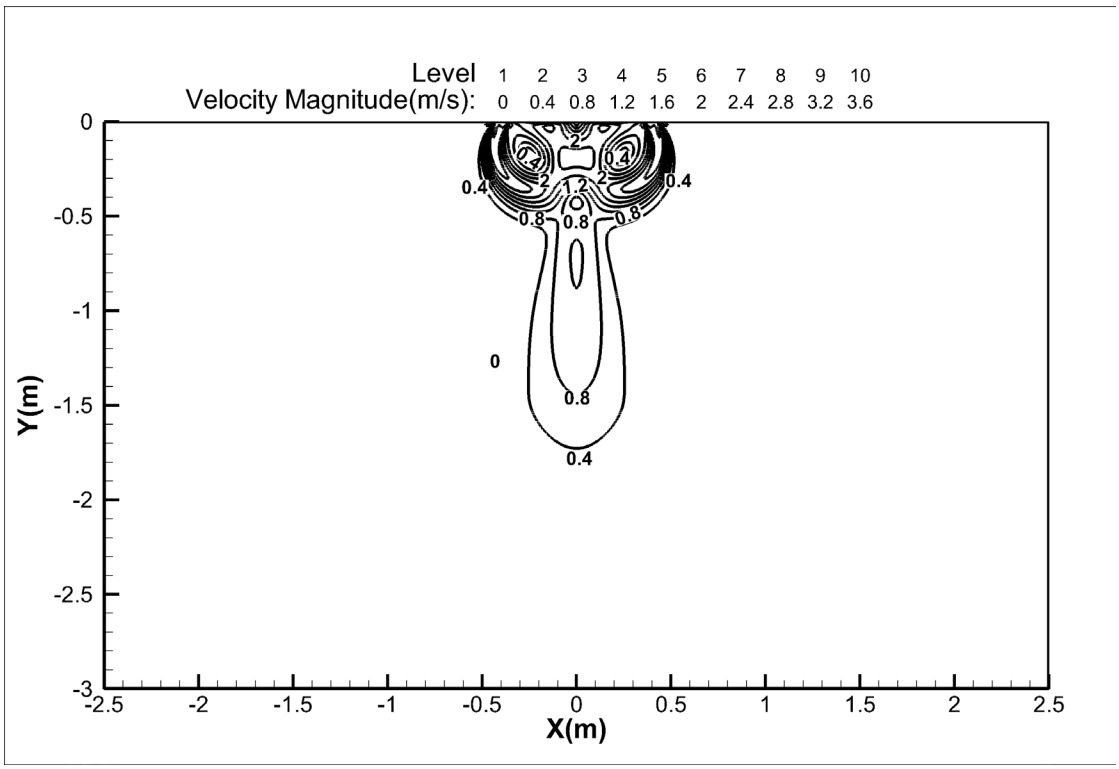

Cooling temperature distributions

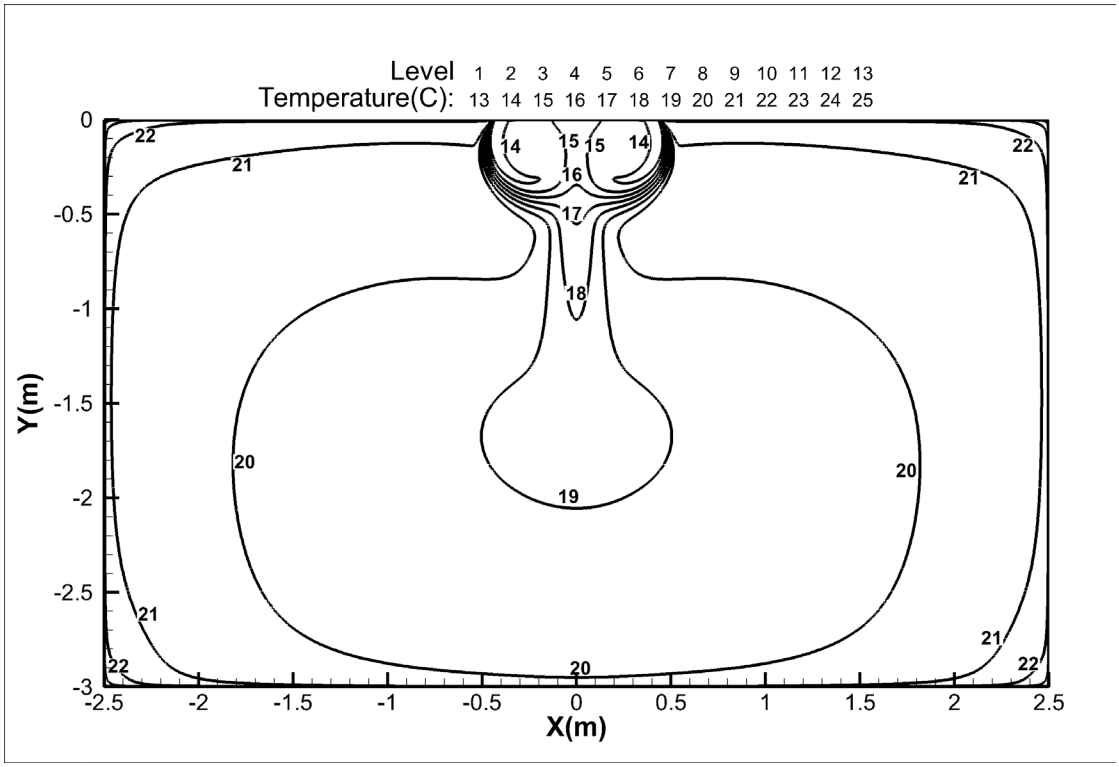

Compact Cassette Type -18k

Heating airflow velocity distributions

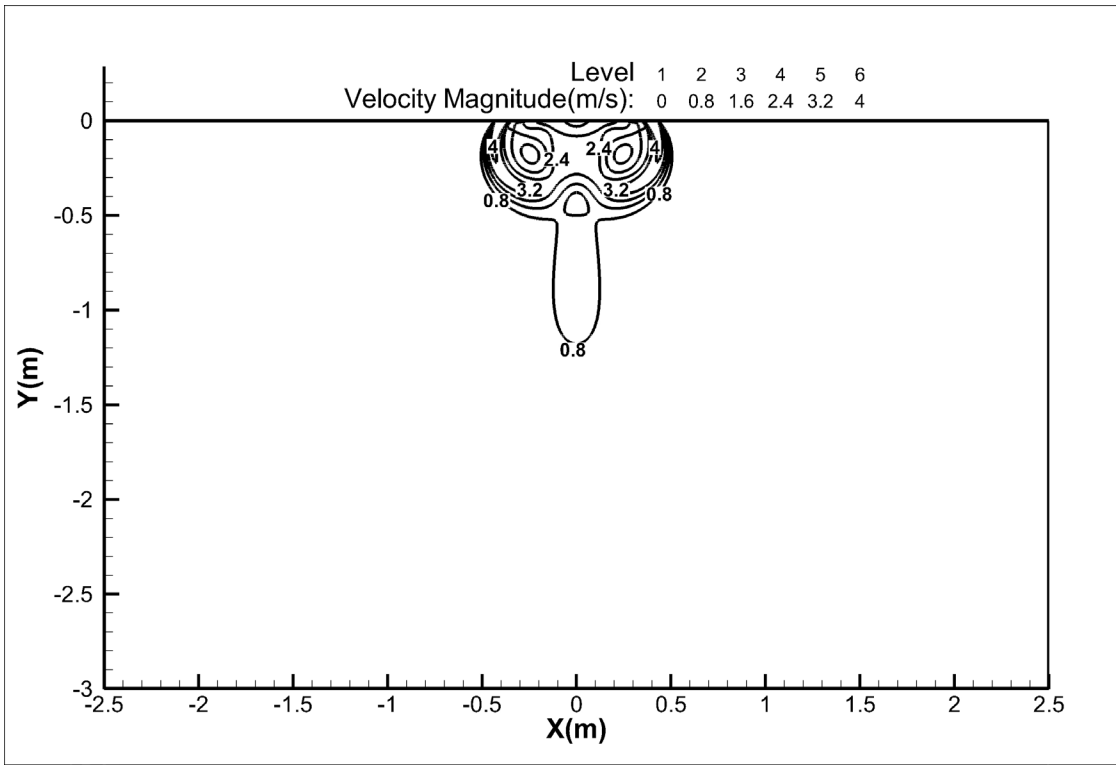

Heating temperature distributions

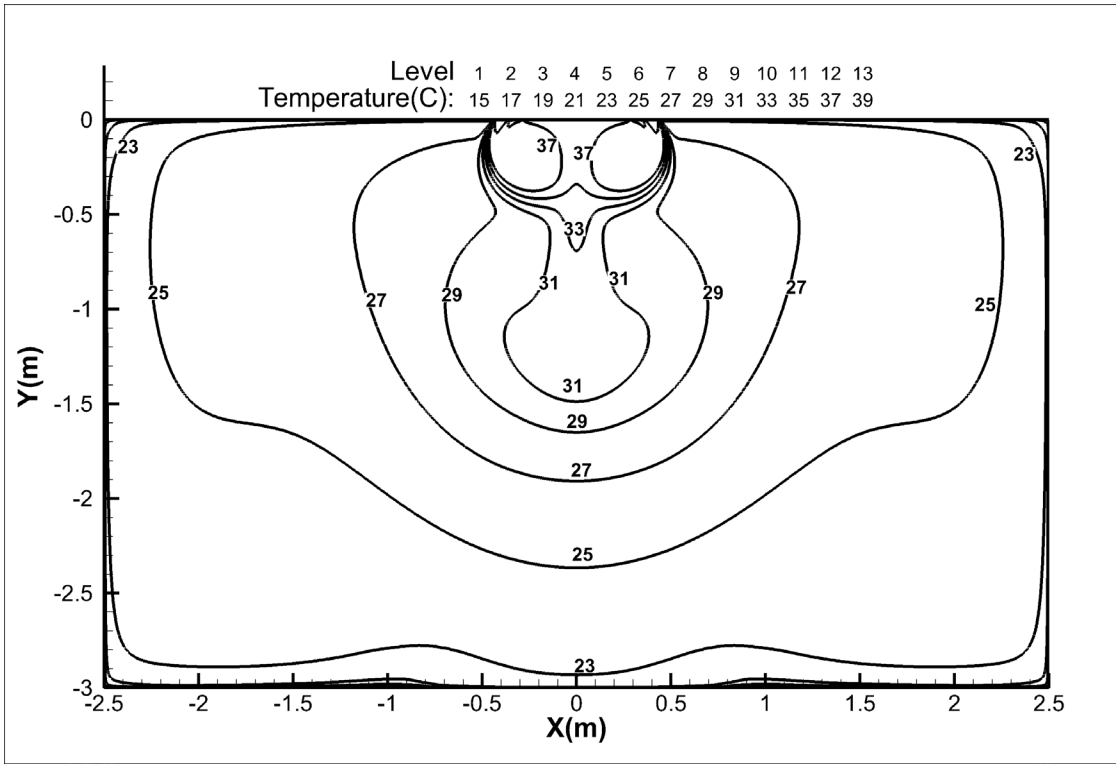

New 4-way Cassette Type -24k

Discharge Angle 30°

Cooling airflow velocity distributions

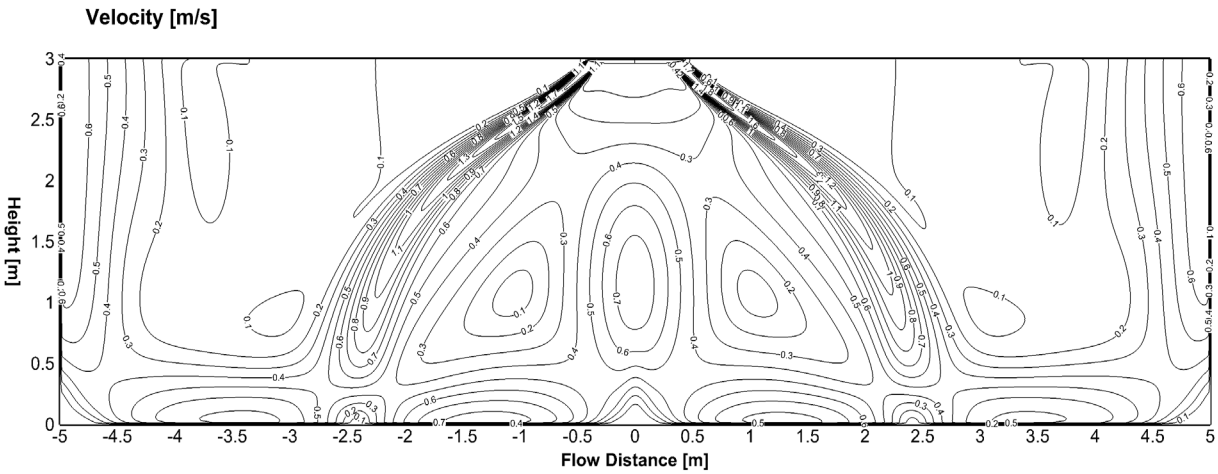

Cooling temperature distributions

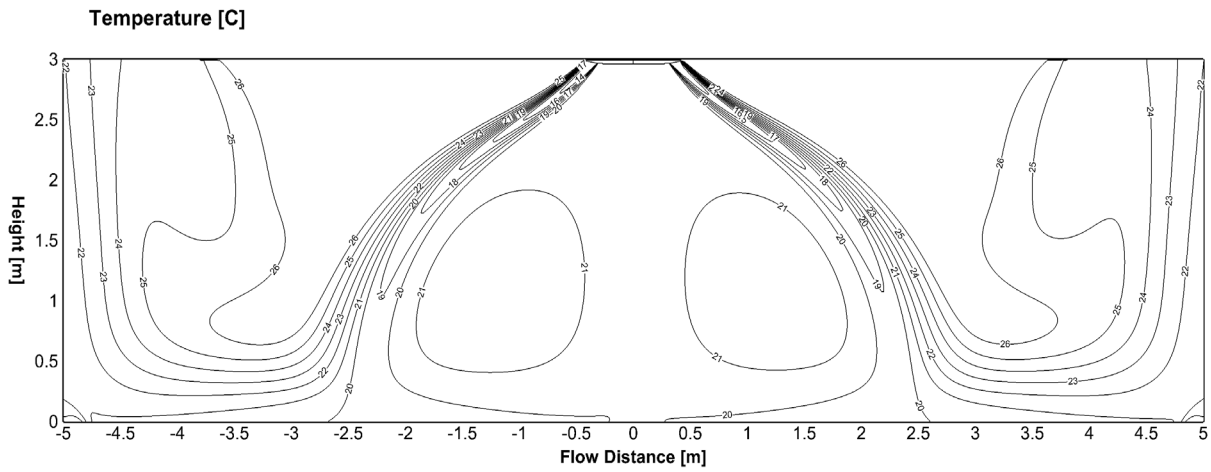

New 4-way Cassette Type -24k

Heating airflow velocity distributions

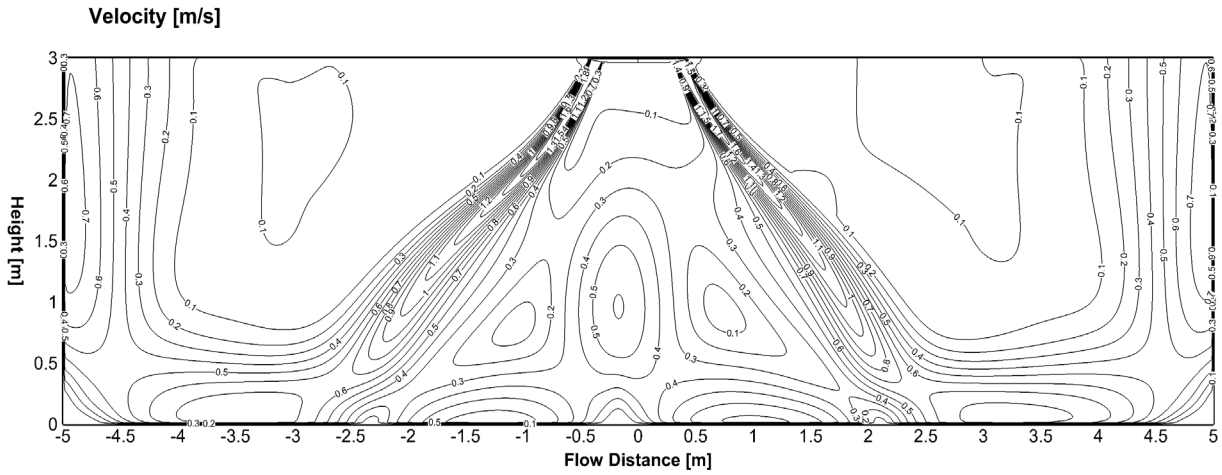

Heating temperature distributions

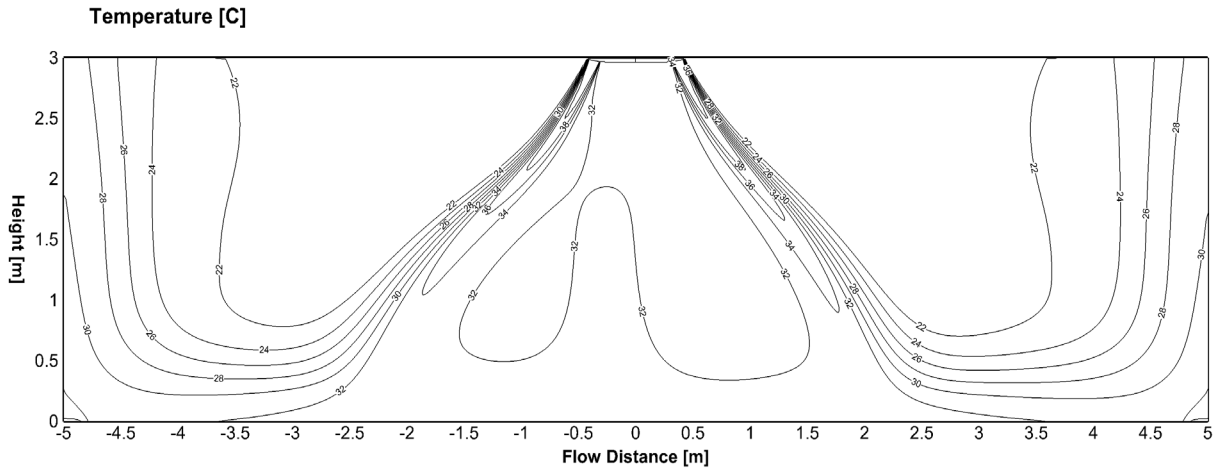

Console Type-9k, 12k, 18k

Discharge Angle 70°(Upper)/ 0°(Lower)

Cooling airflow velocity distributions

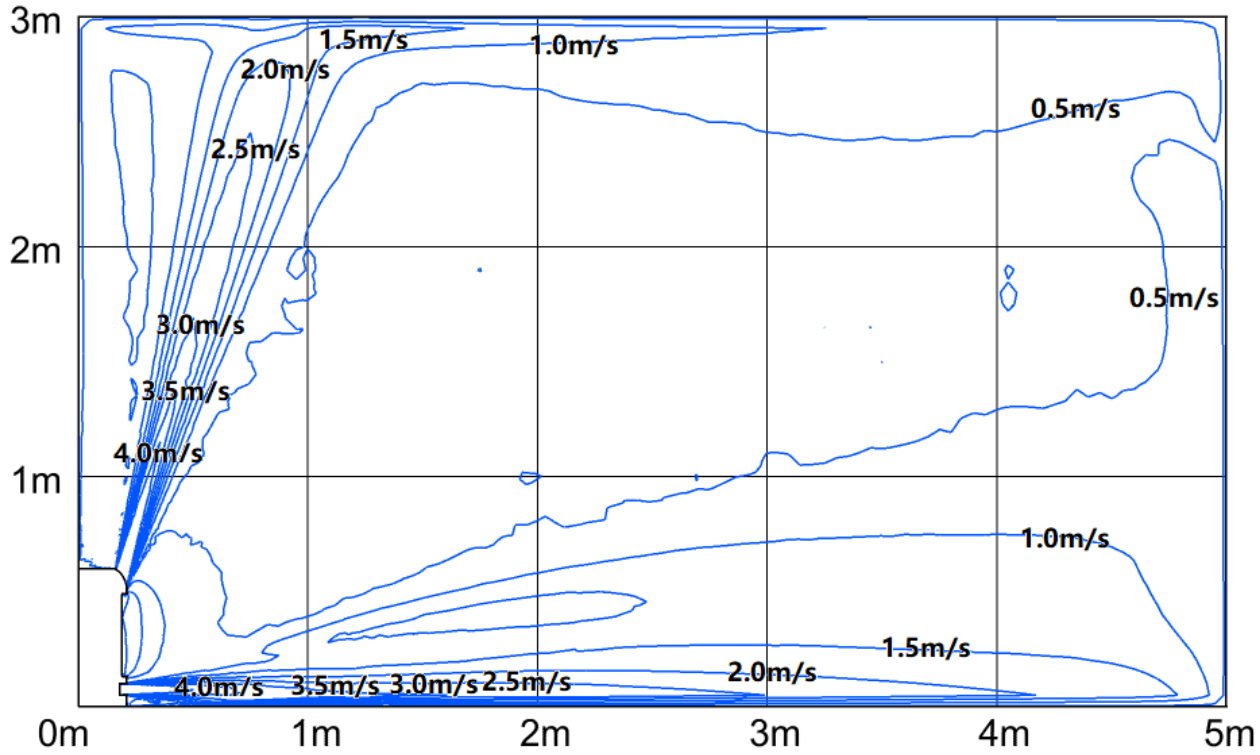

Cooling temperature distributions

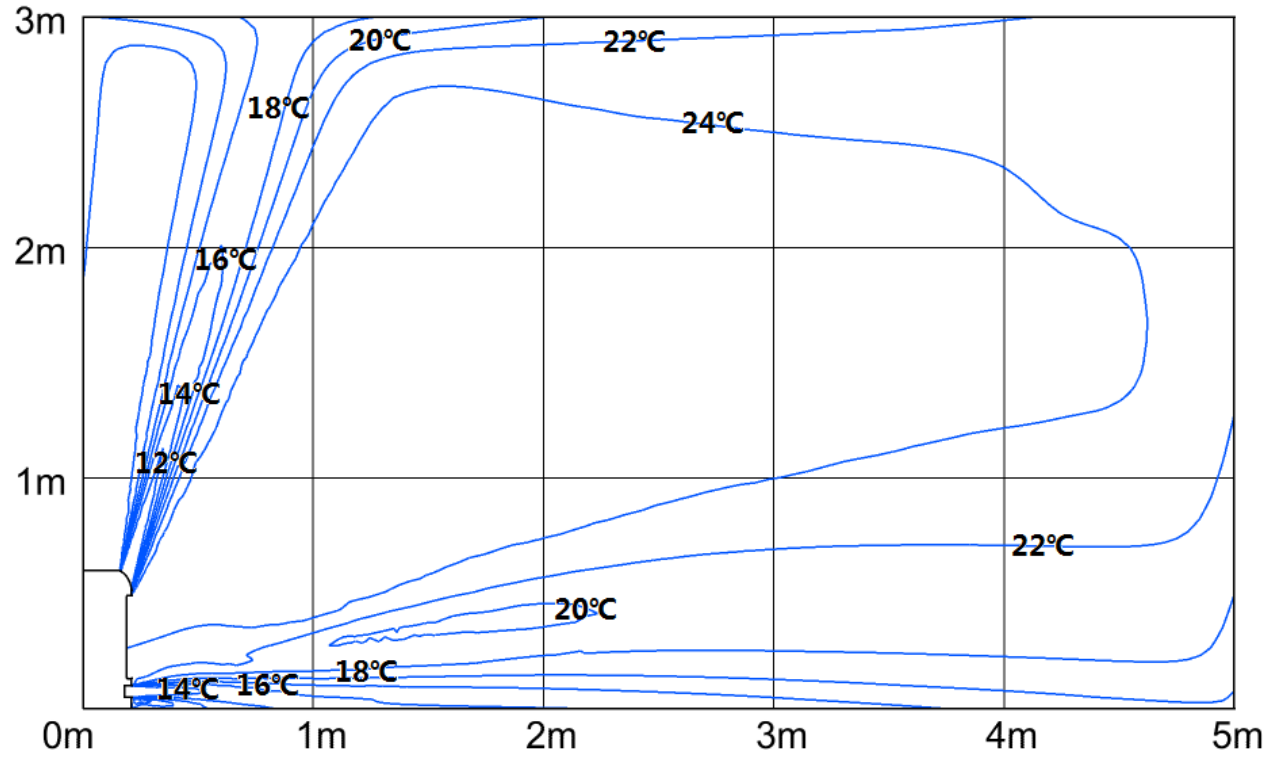

Console Type-9k, 12k, 18k

Discharge Angle 20°(Upper)/ 0°(Lower)

Heating airflow velocity distributions

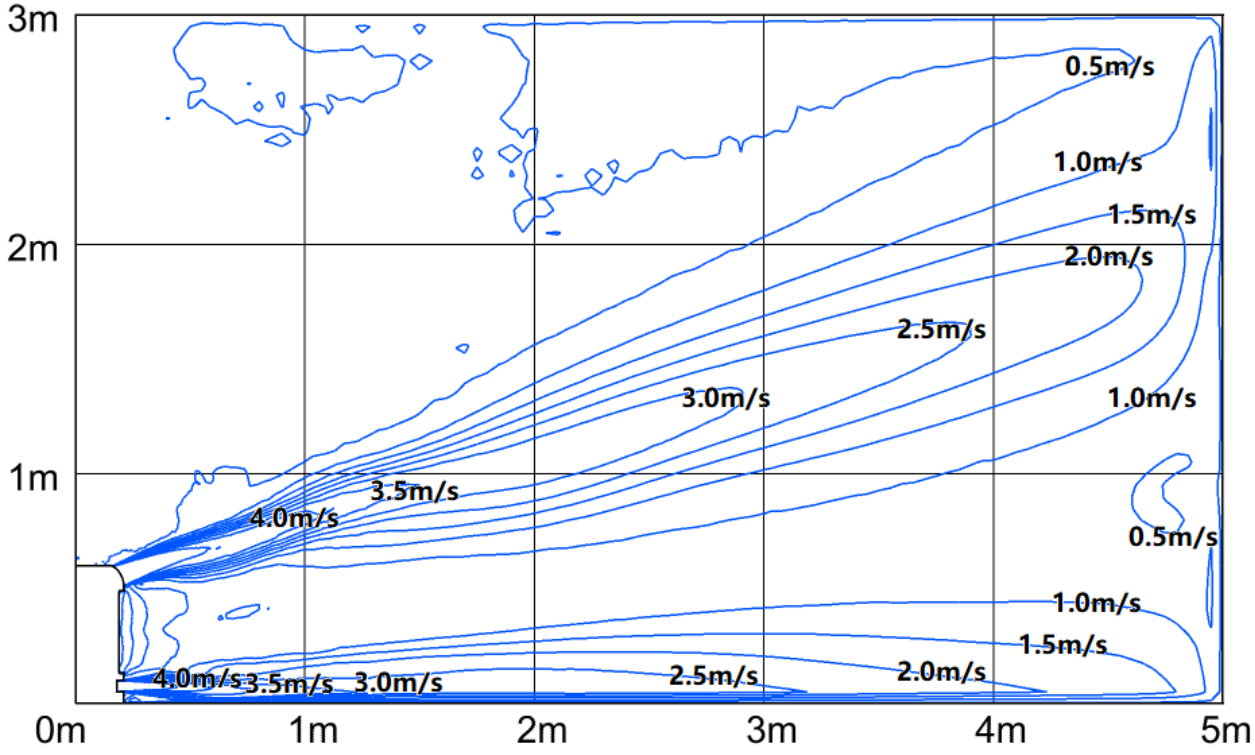

Heating temperature distributions

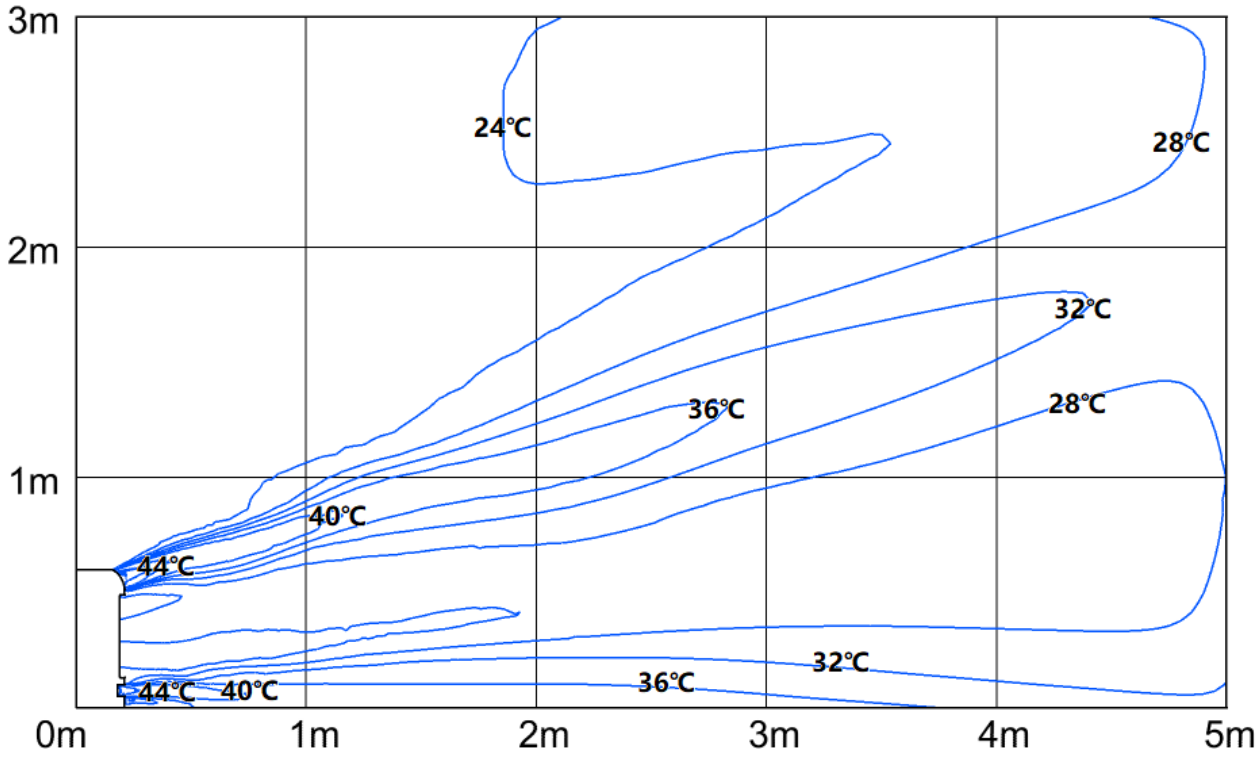

XTREME-9k

Discharge Angle 58°

Cooling airflow velocity distributions

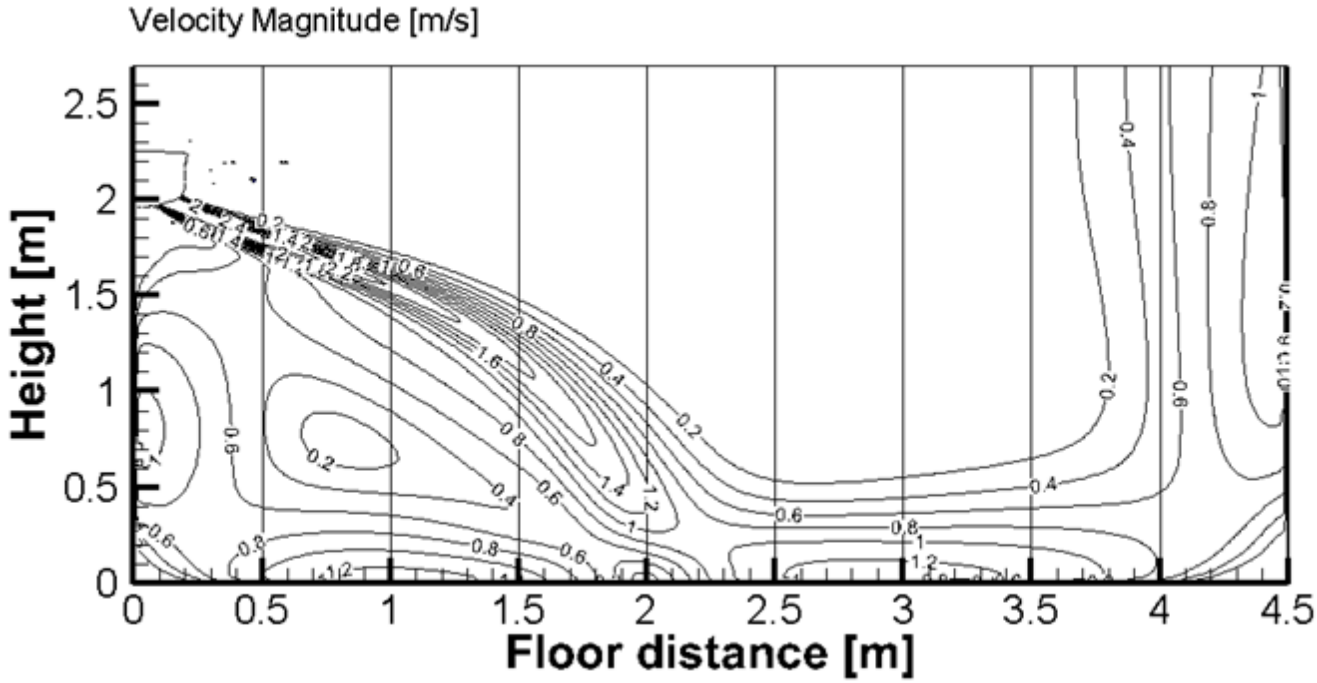

Cooling temperature distributions

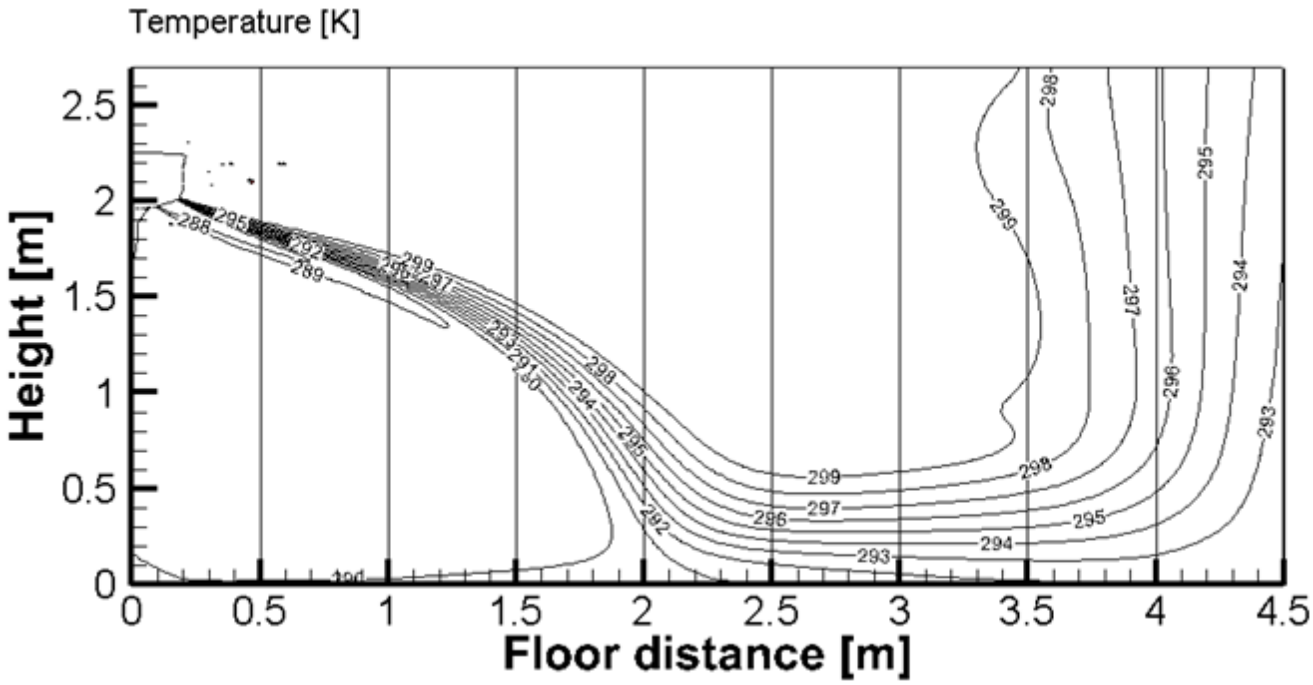

XTREME-9k

Discharge Angle 90°

Heating airflow velocity distributions

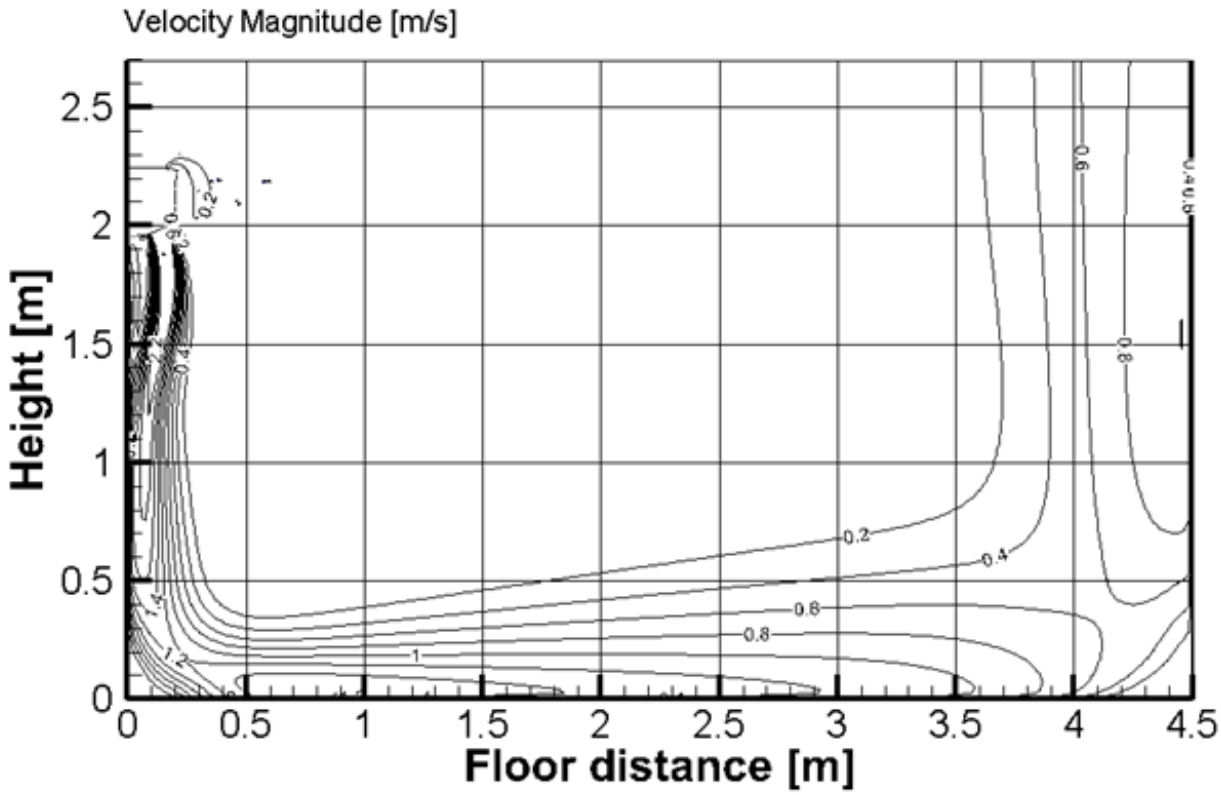

Heating temperature distributions

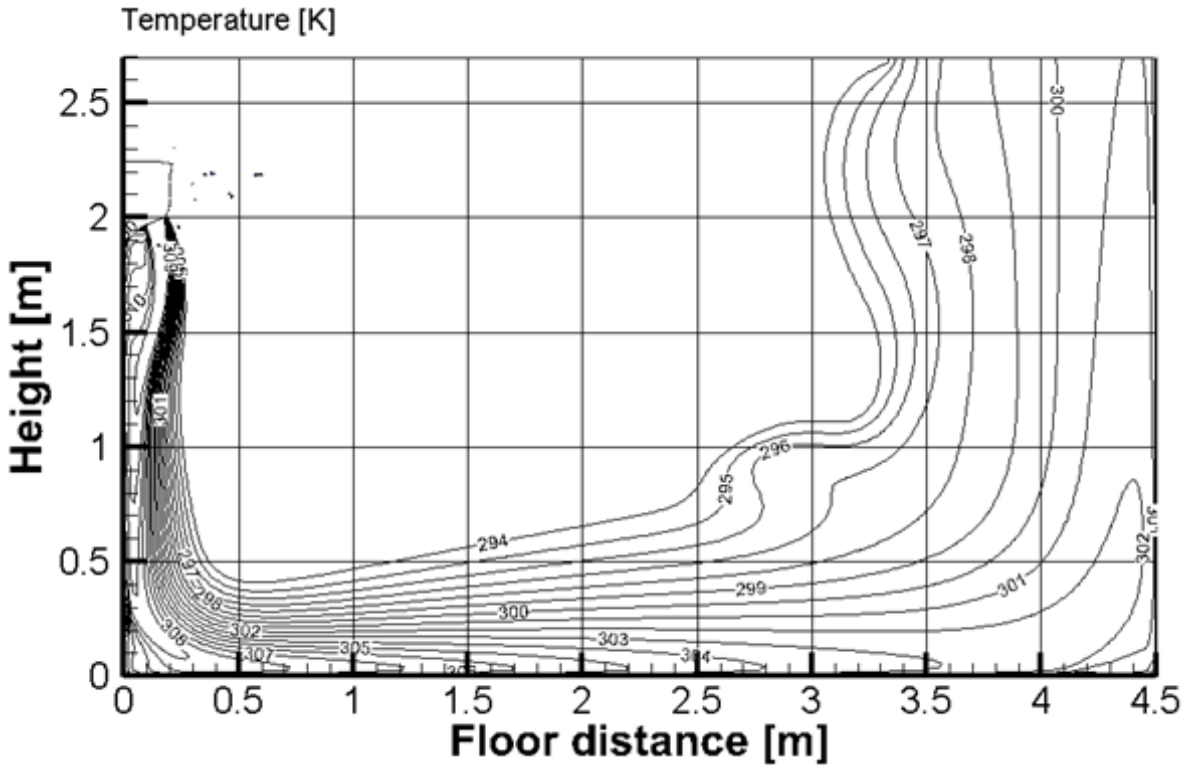

XTREME-12k

Discharge Angle 58°

Cooling airflow velocity distributions

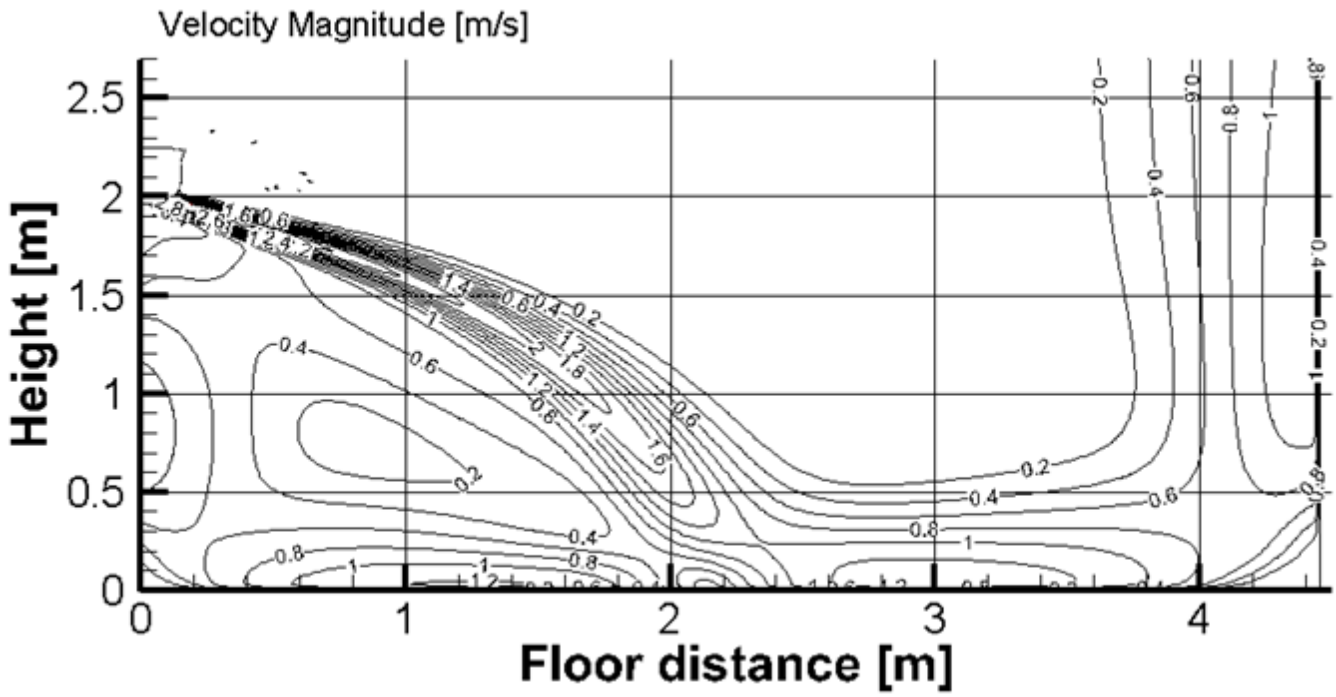

Cooling temperature distributions

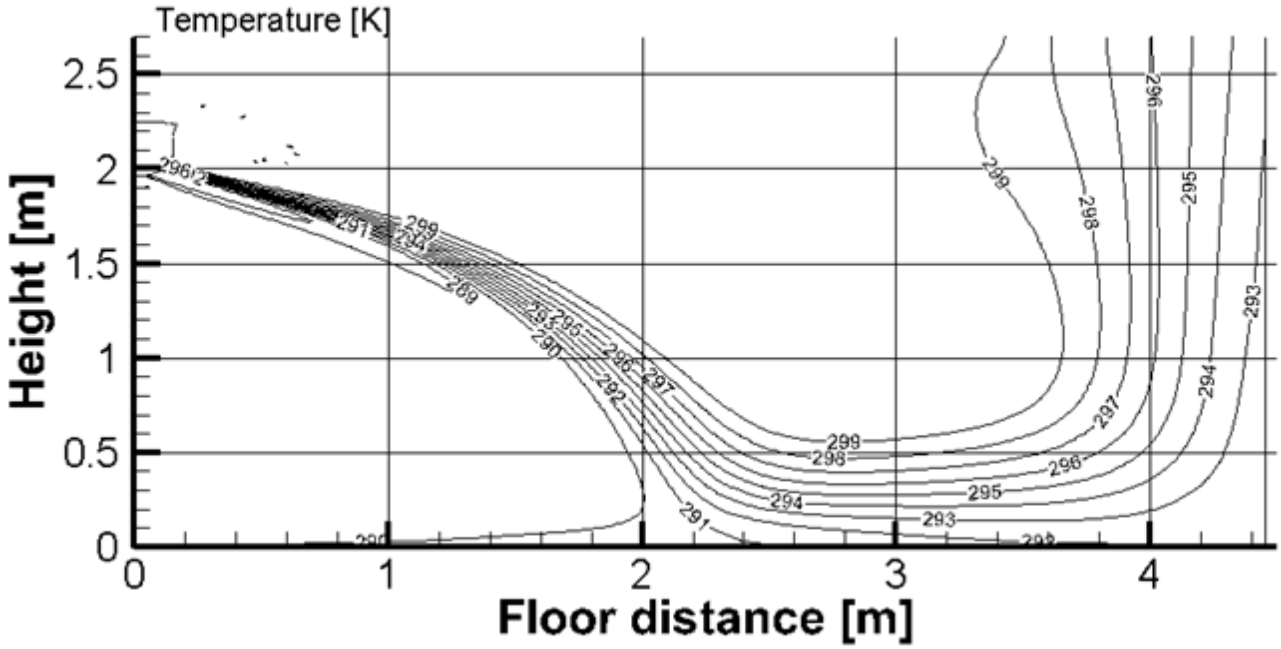

XTREME-12k

Heating airflow velocity distributions

Discharge Angle 90°

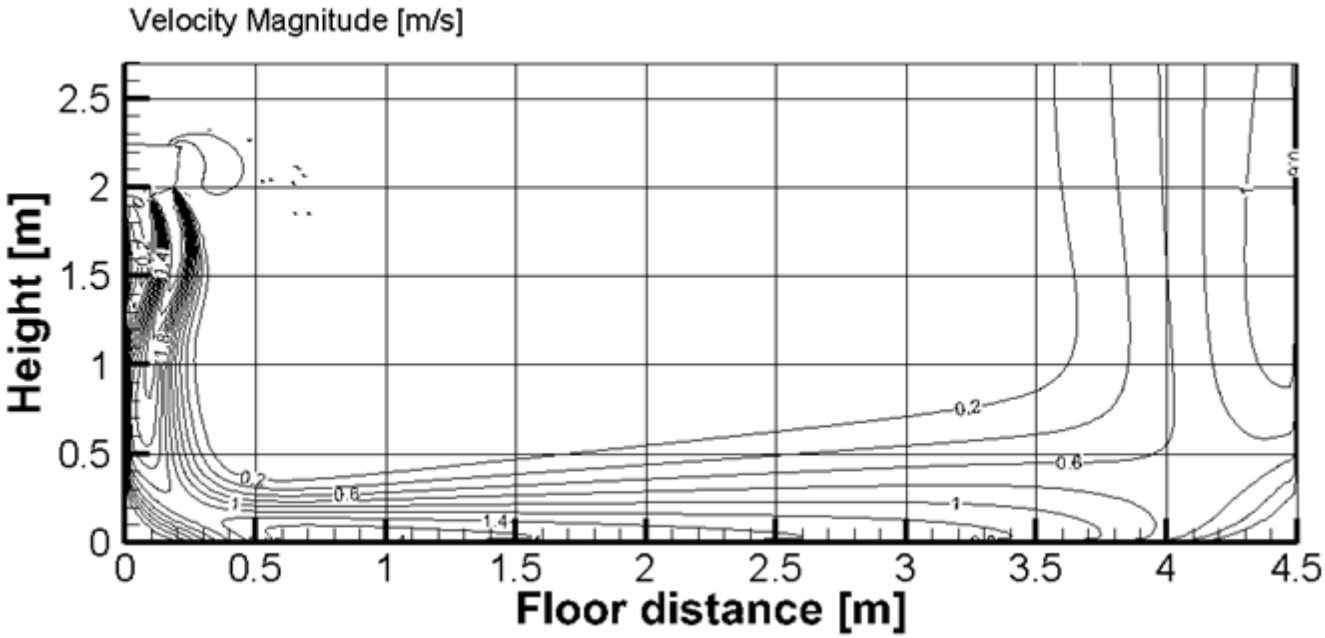

Heating temperature distributions

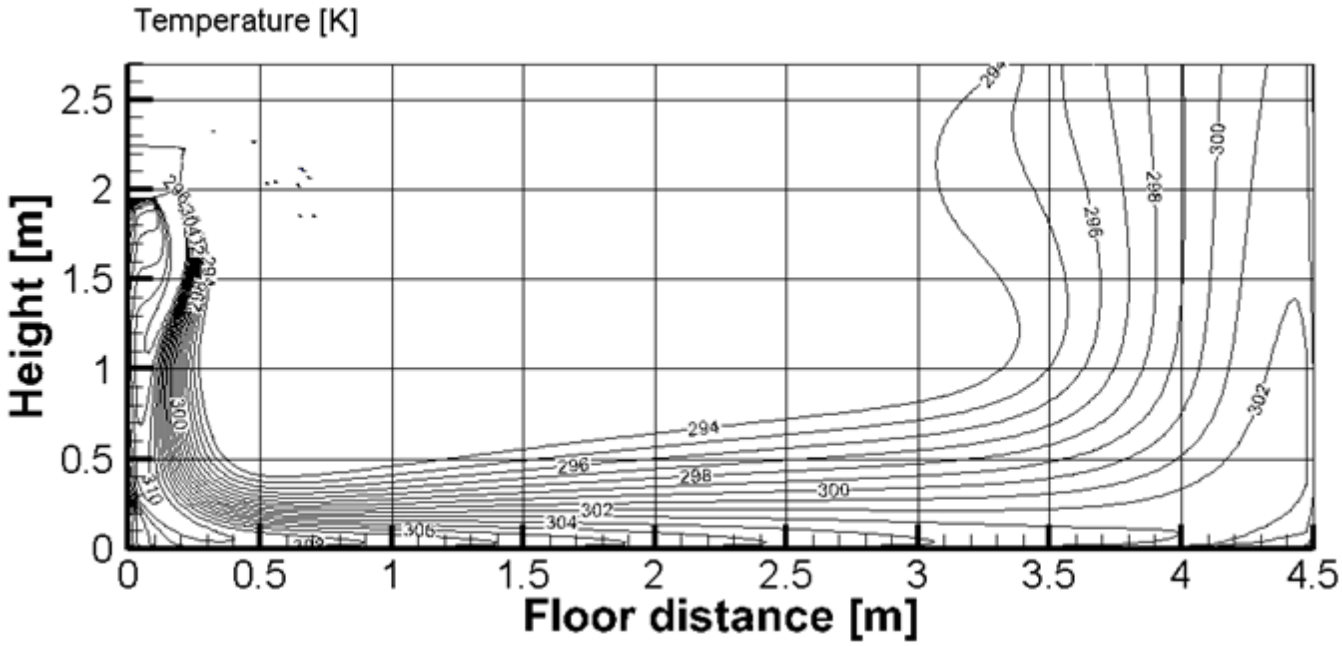

XTREME-18k

Discharge Angle 50°

Cooling airflow velocity distributions

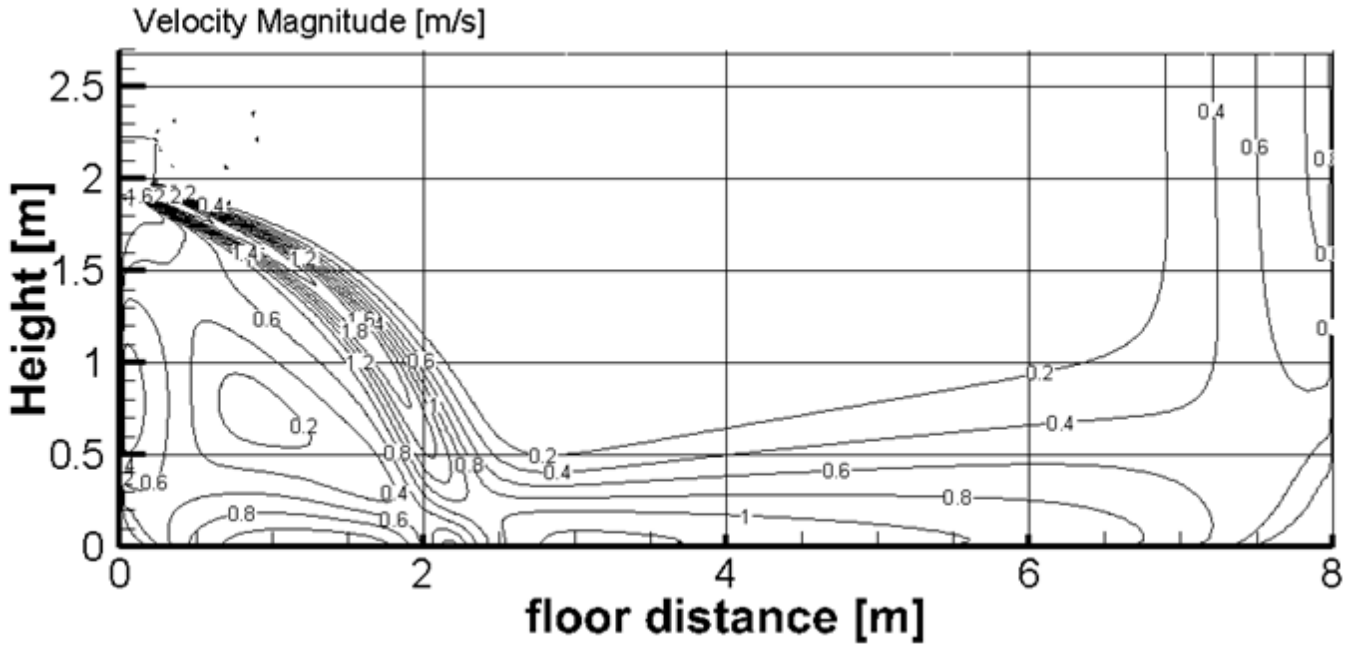

Cooling temperature distributions

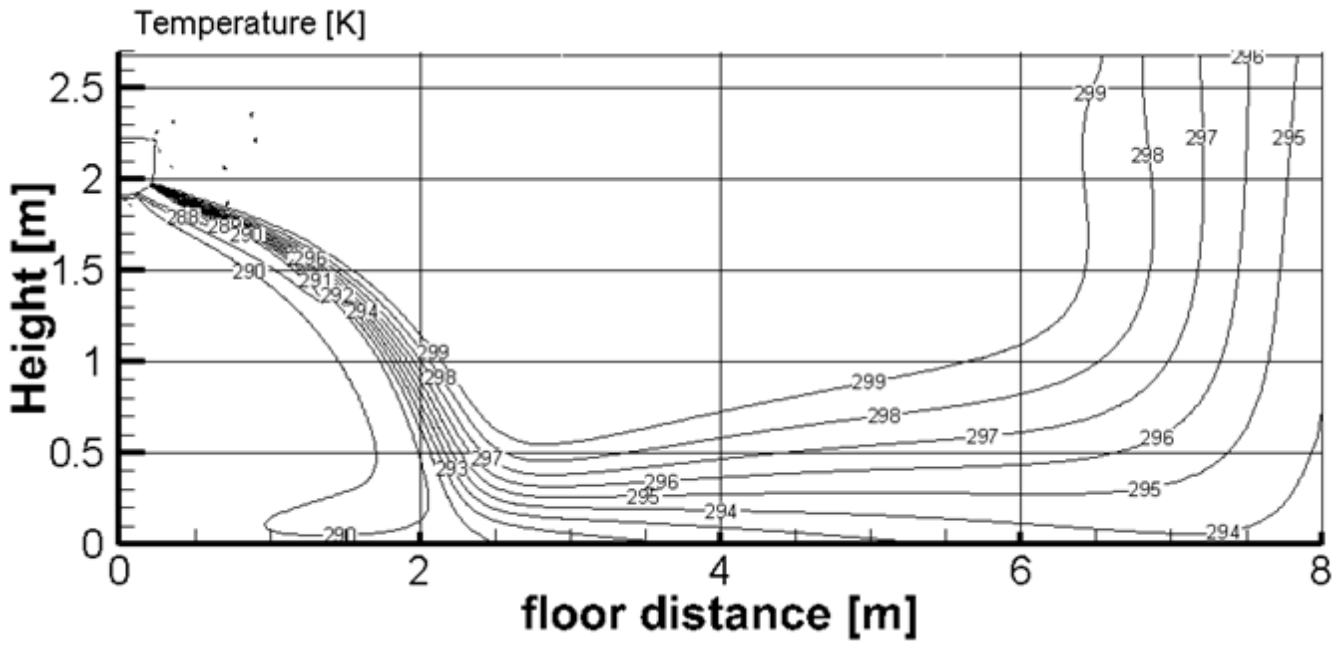

XTREME-18k

Discharge Angle 84°

Heating airflow velocity distributions

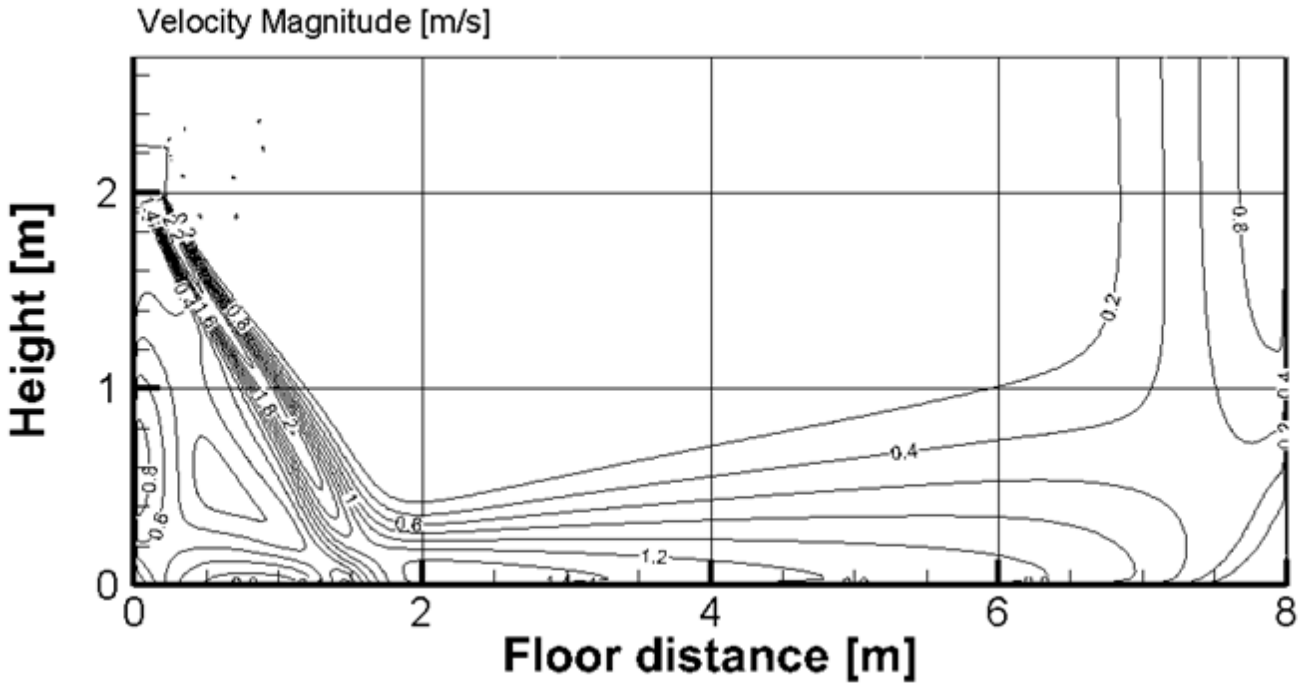

Heating temperature distributions

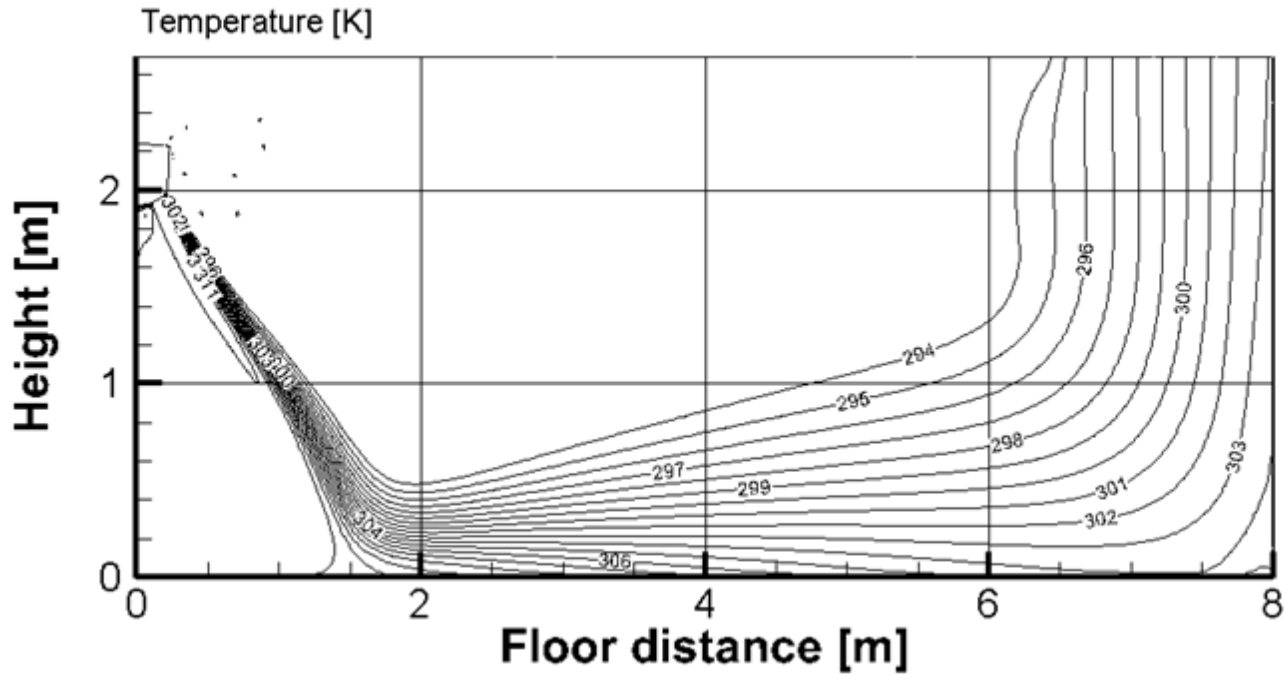

XTREME-24k

Discharge Angle 50°

Cooling airflow velocity distributions

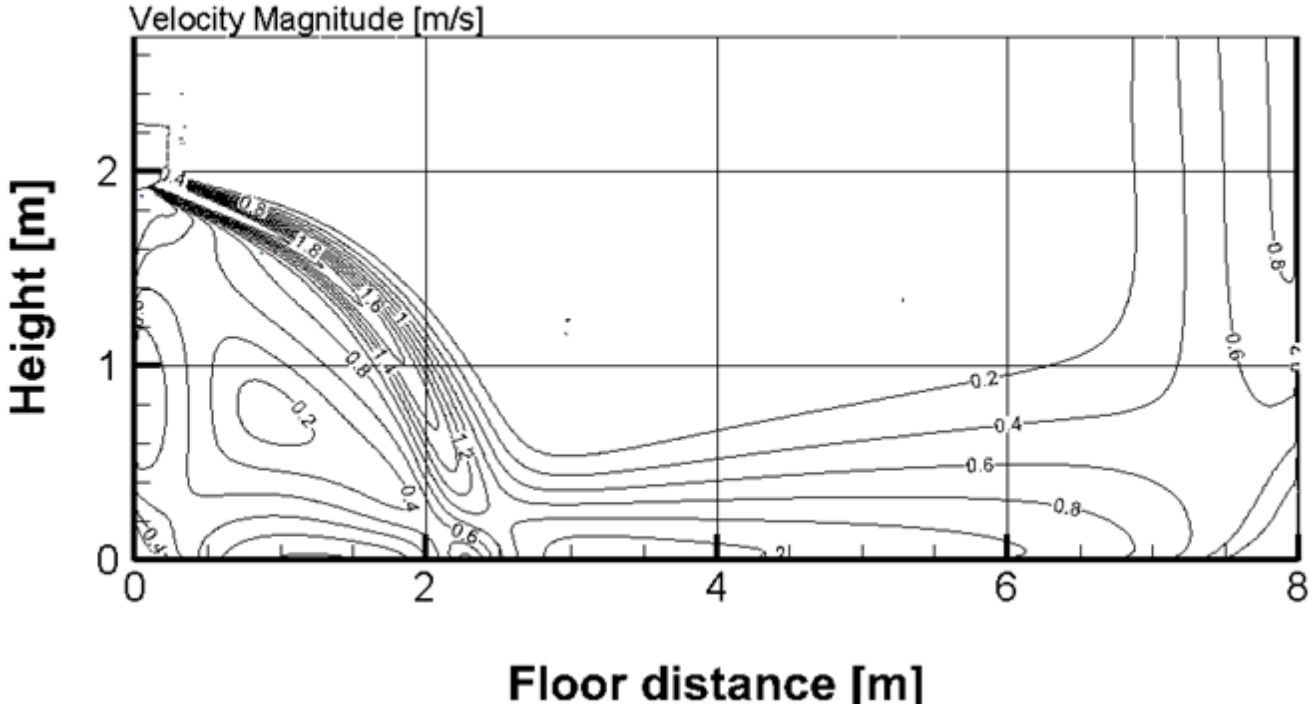

Cooling temperature distributions

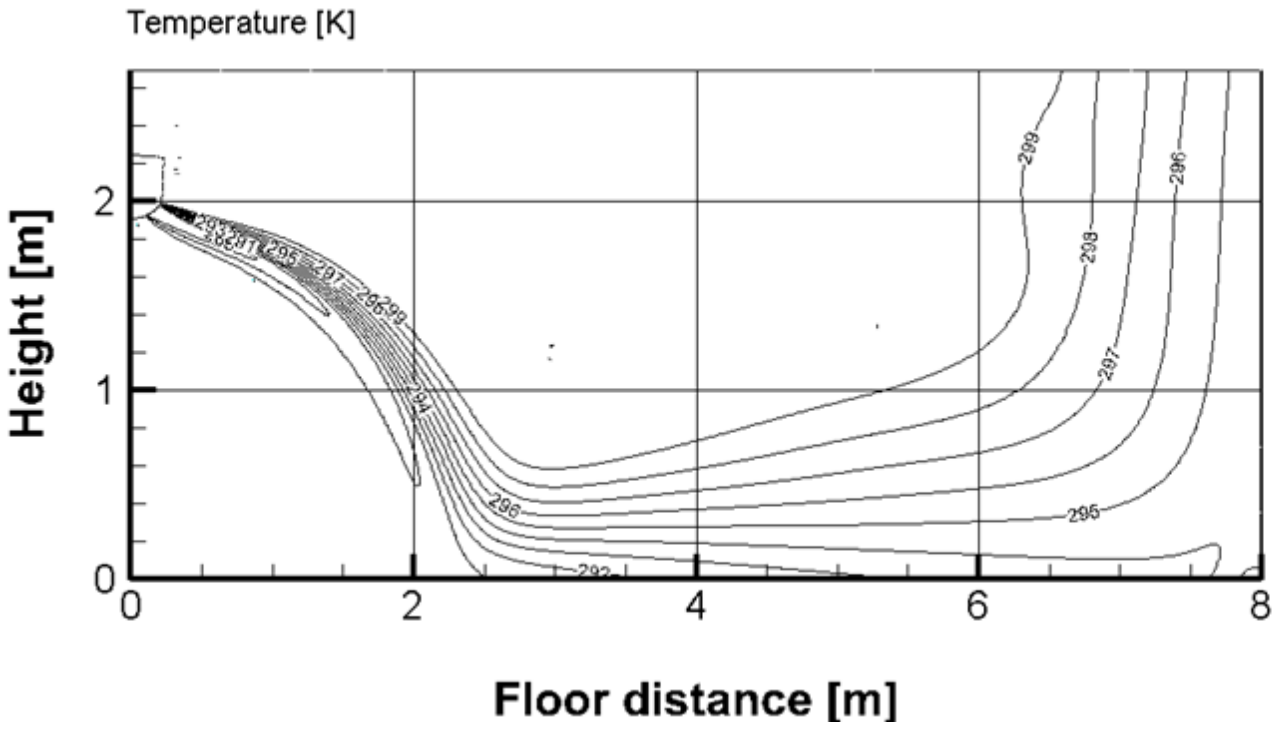

XTREME-24k

Discharge Angle 67°

Heating airflow velocity distributions

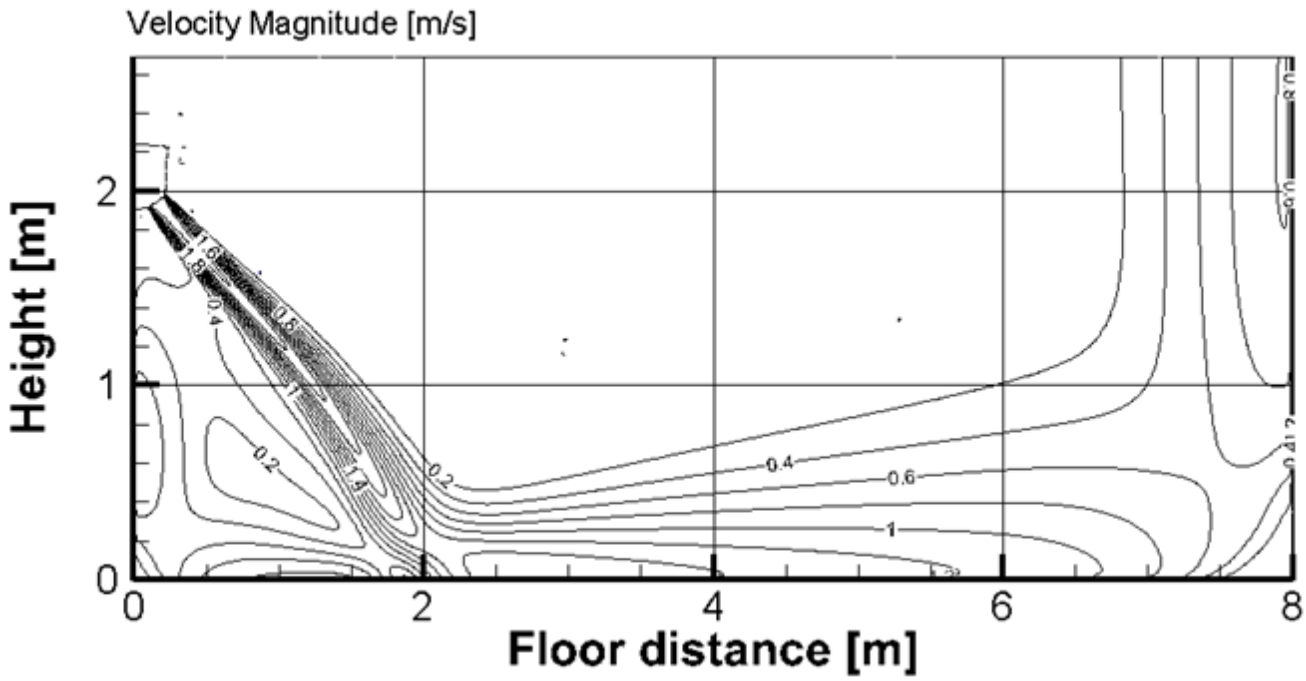

Heating temperature distributions

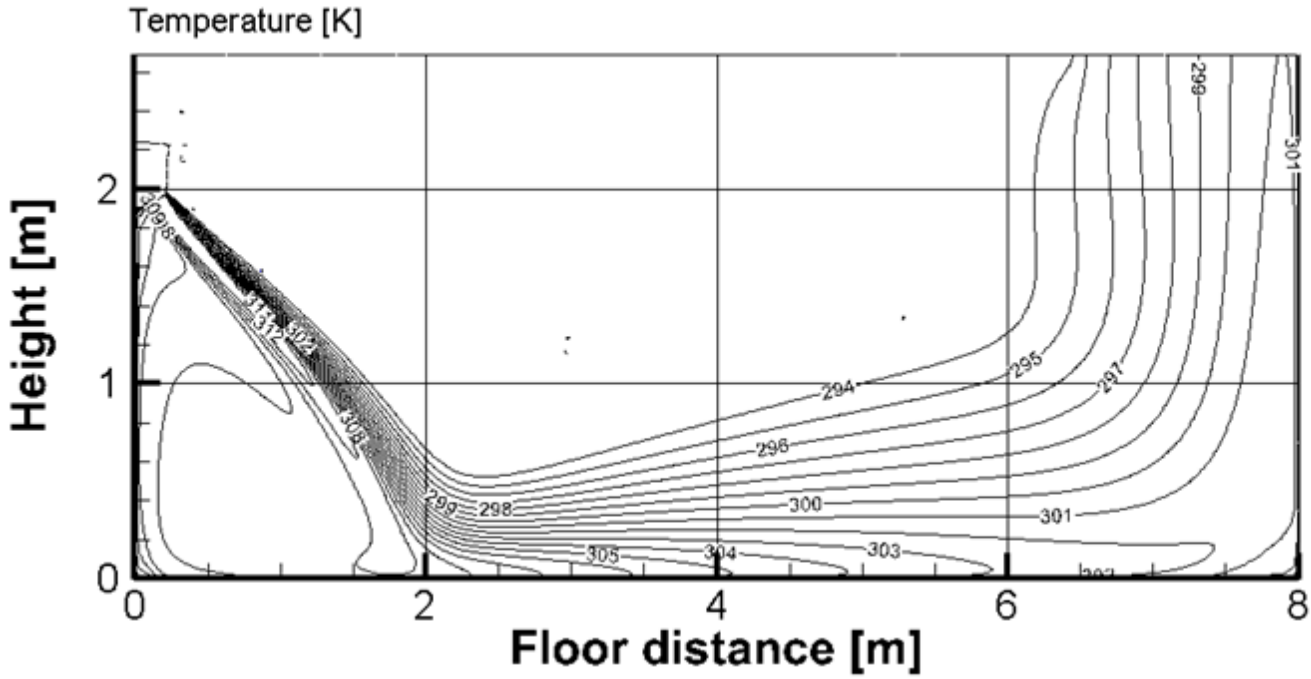

AURORA-9k

Discharge Angle 58°

Cooling airflow velocity distributions

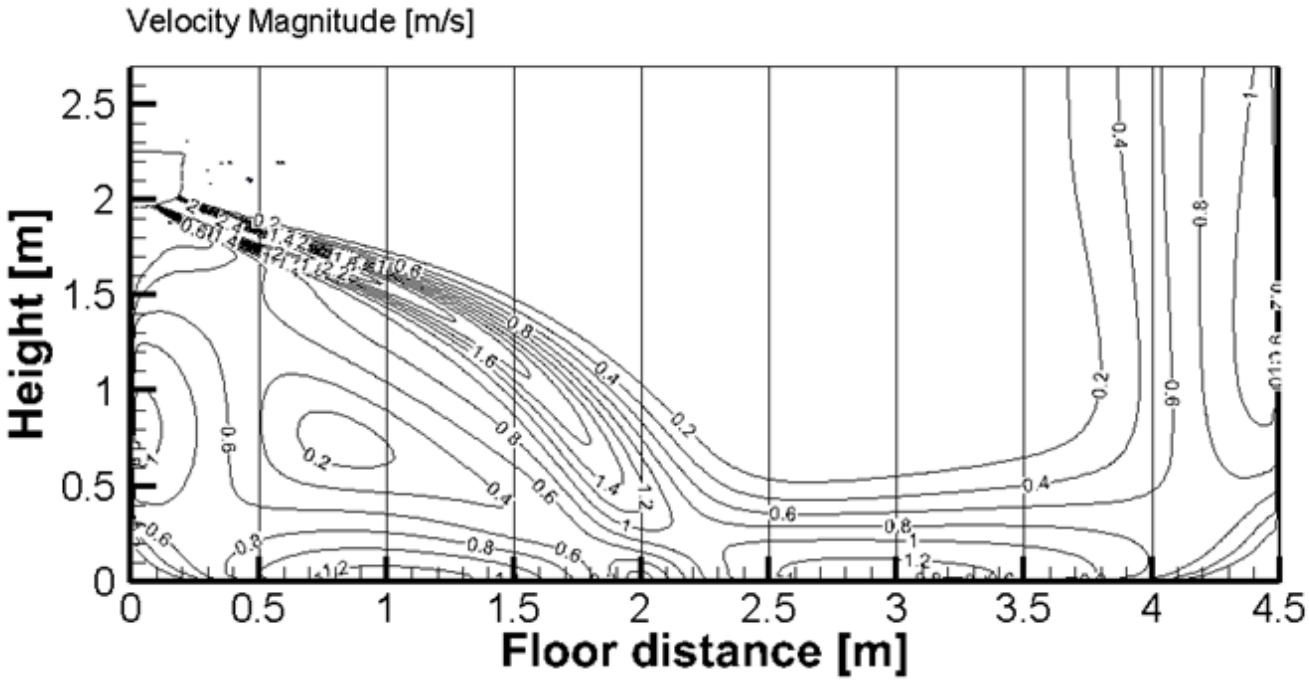

Cooling temperature distributions

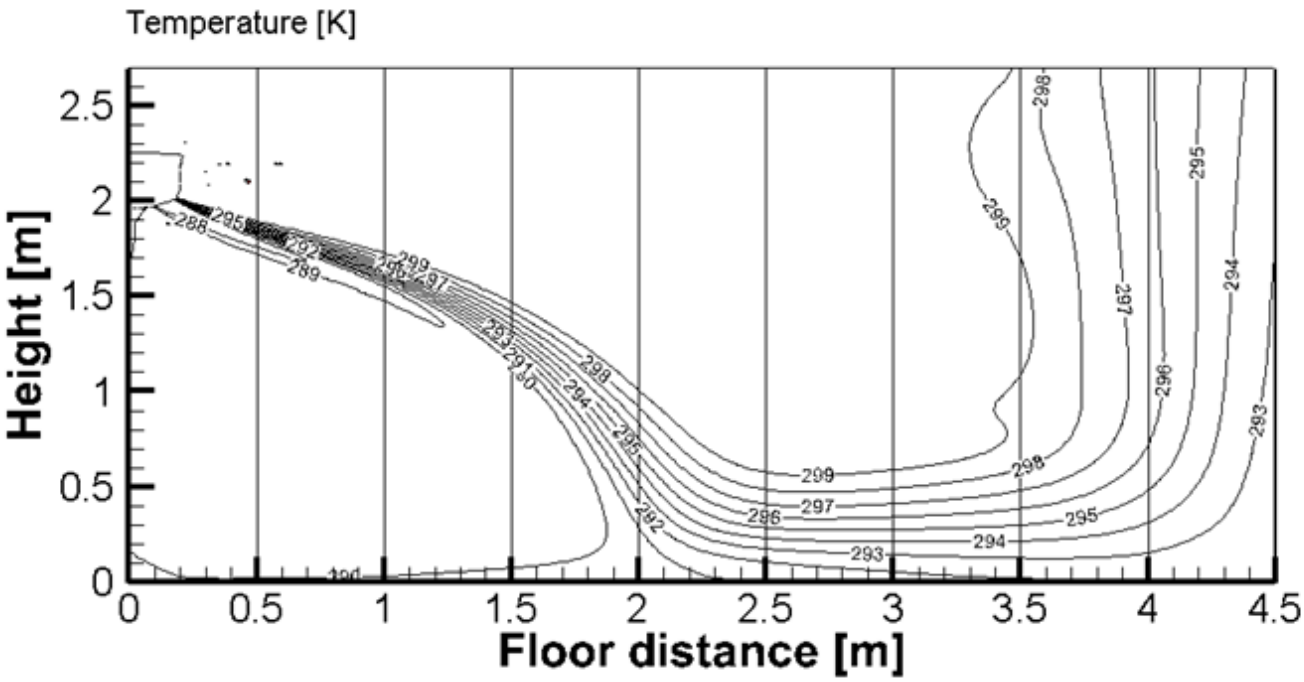

AURORA-9k

Discharge Angle 90°

Heating airflow velocity distributions

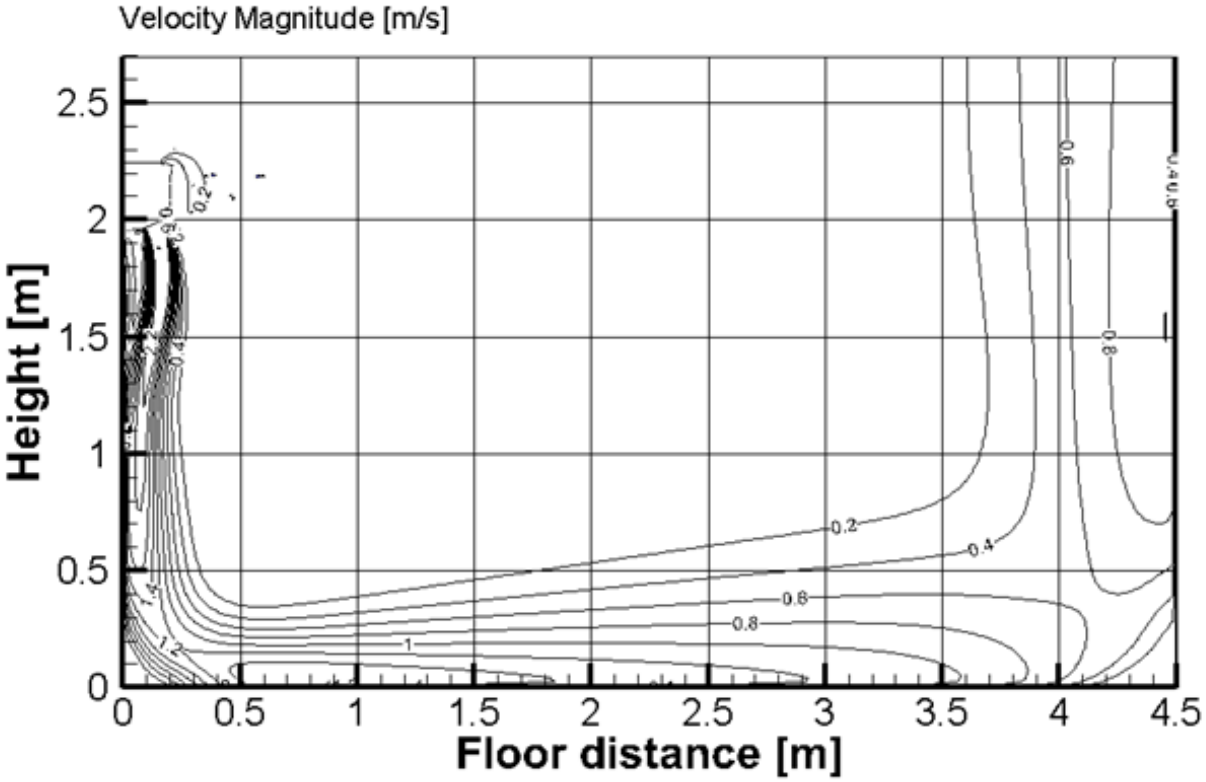

Heating temperature distributions

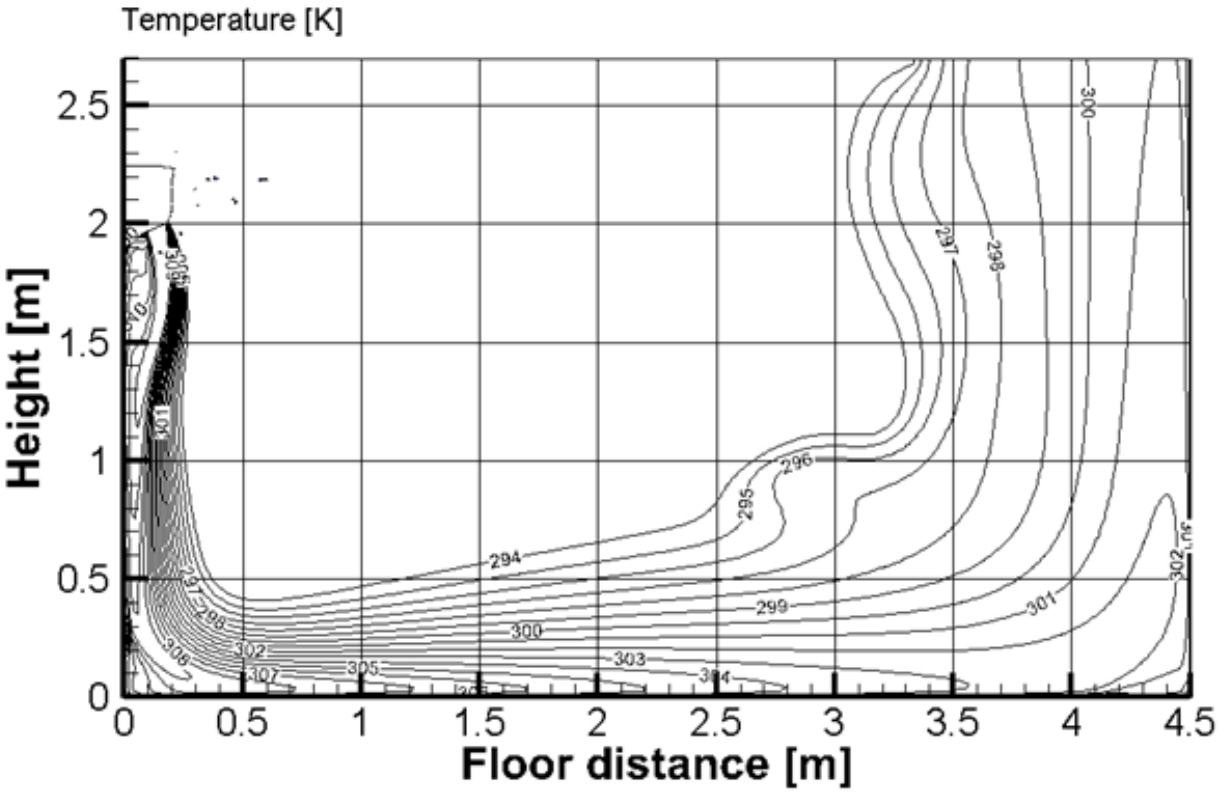

AURORA-12k

Discharge Angle 58°

Cooling airflow velocity distributions

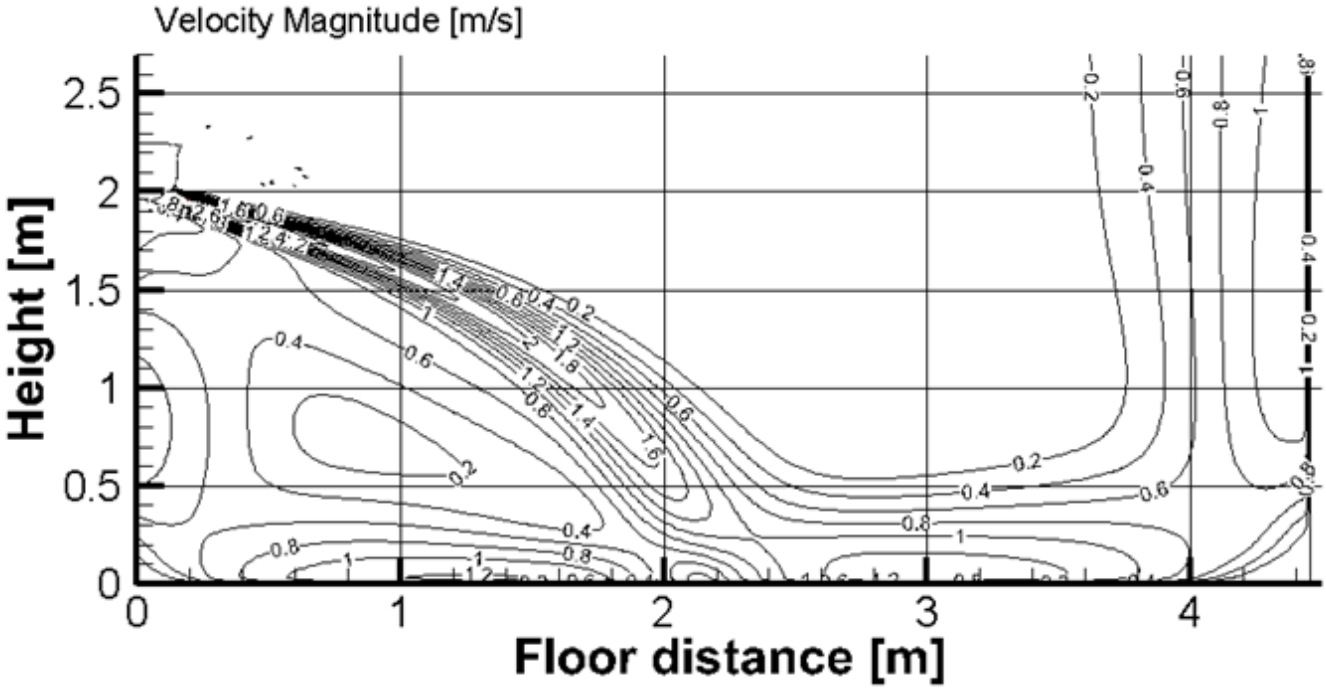

Cooling temperature distributions

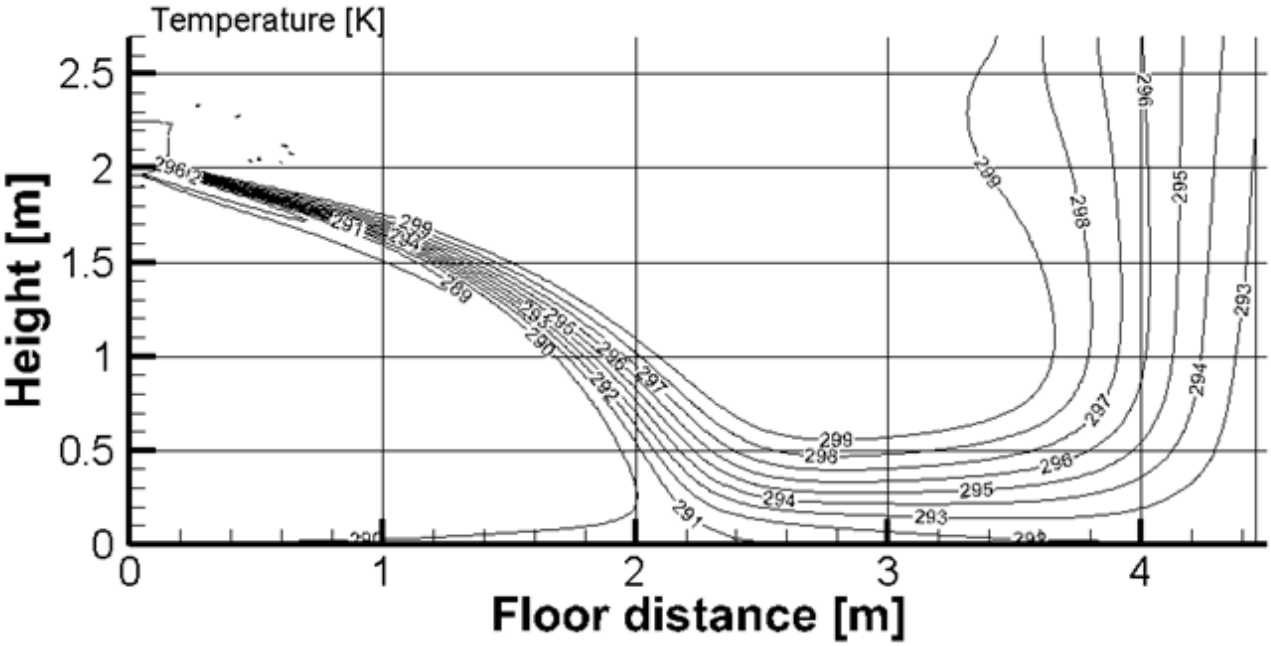

AURORA-12k

Discharge Angle 90°

Heating airflow velocity distributions

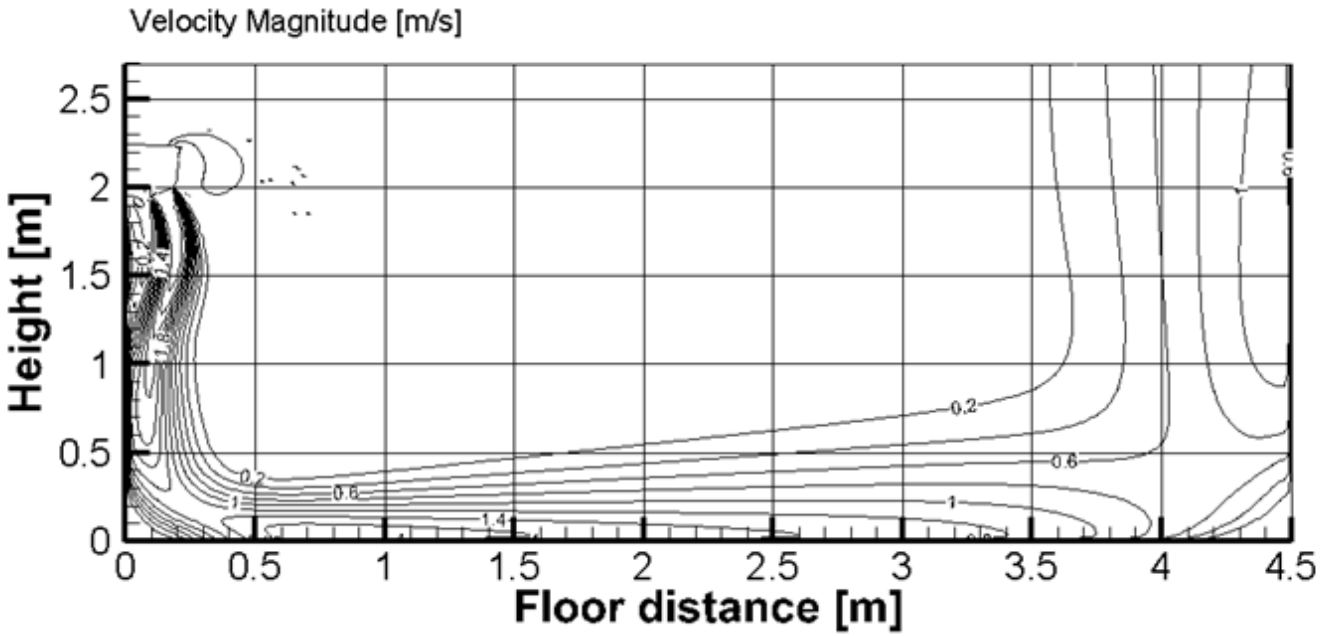

Heating temperature distributions

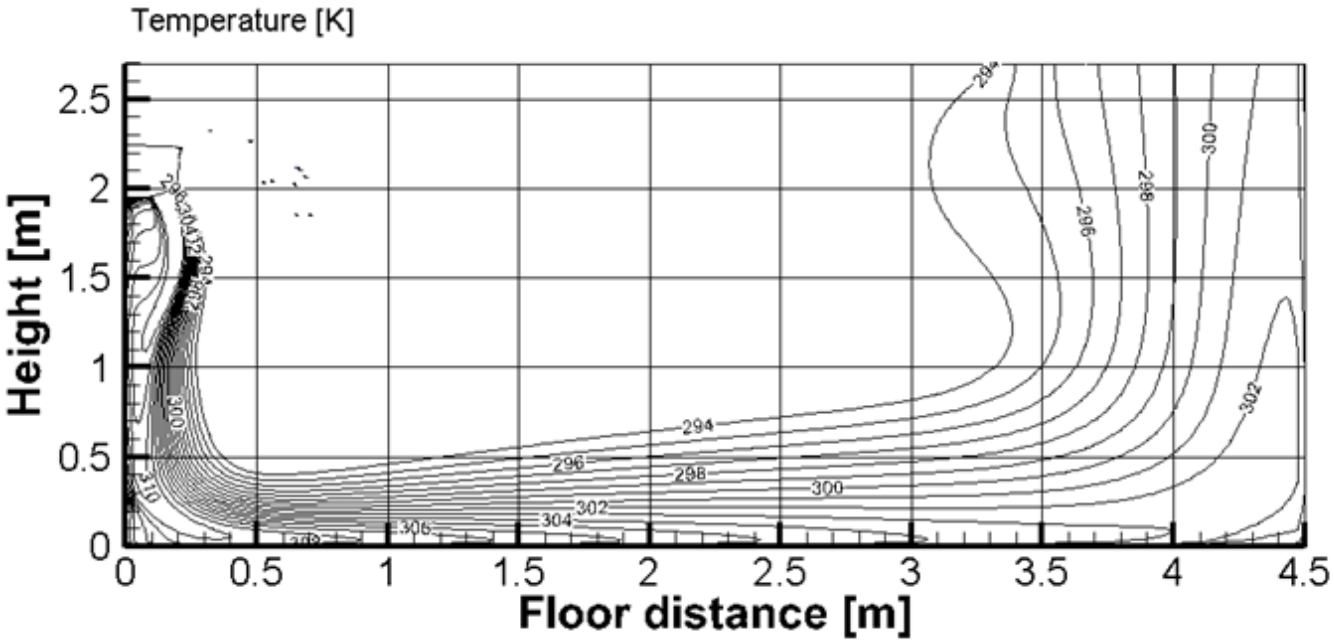

AURORA-18k

Discharge Angle 50°

Cooling airflow velocity distributions

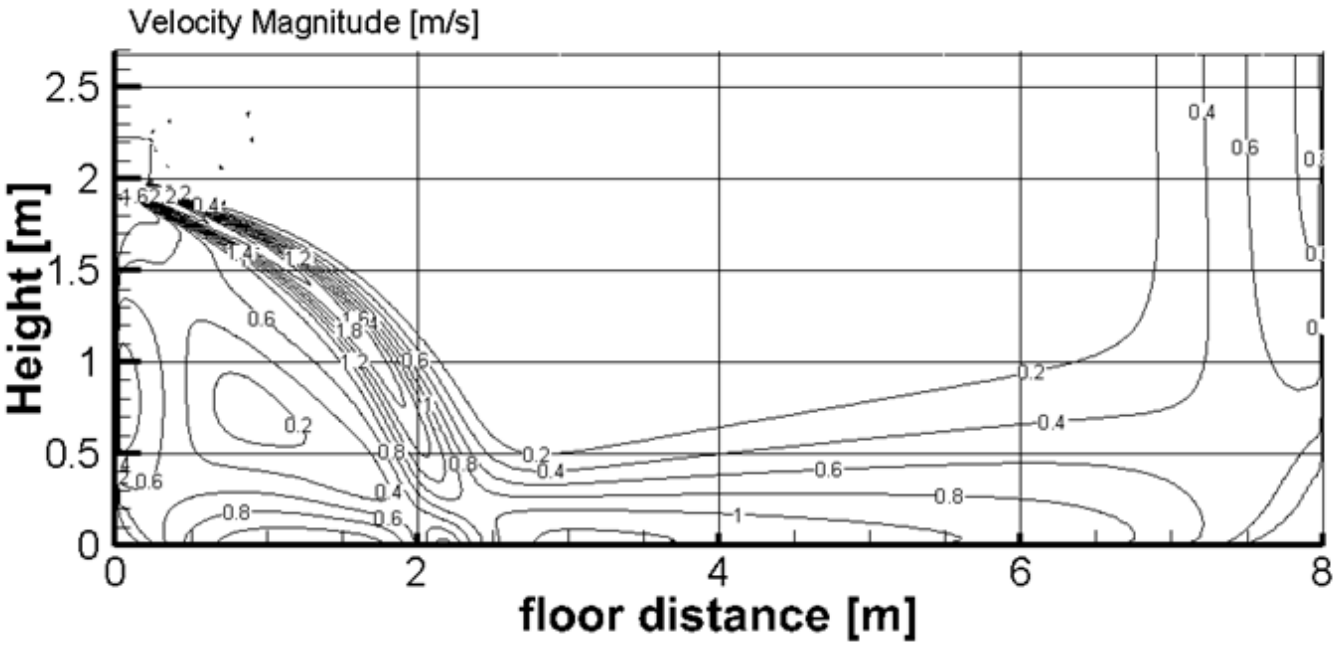

Cooling temperature distributions

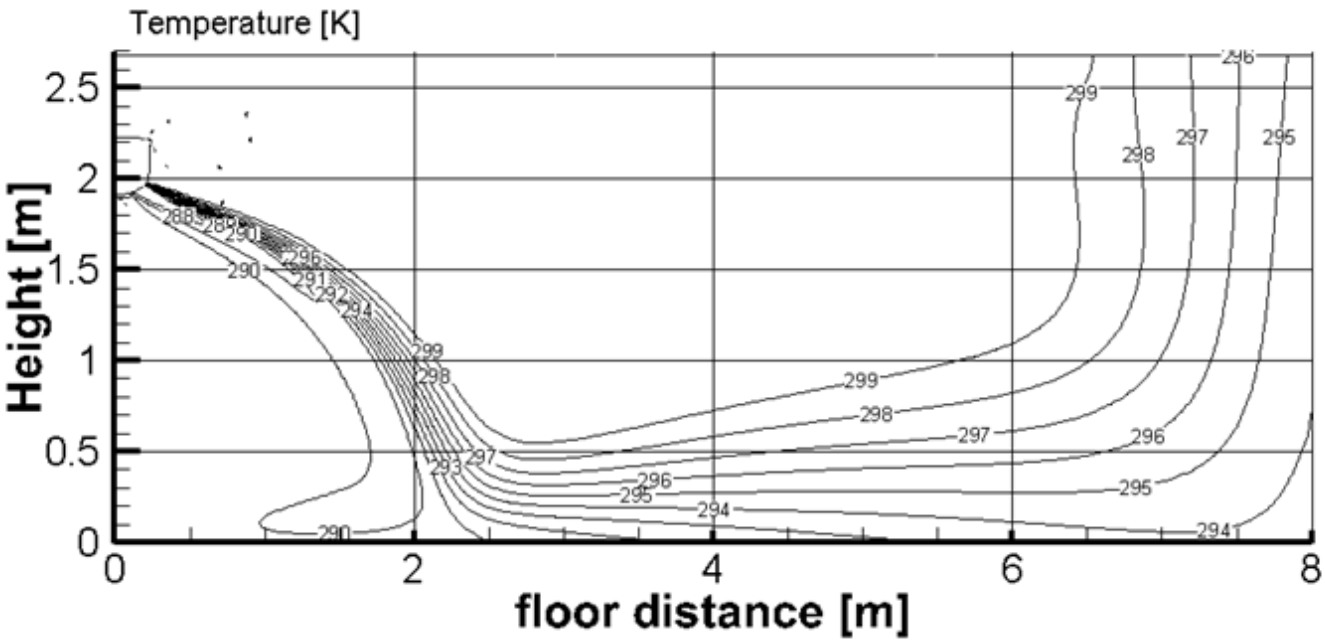

AURORA-18k

Discharge Angle 84°

Heating airflow velocity distributions

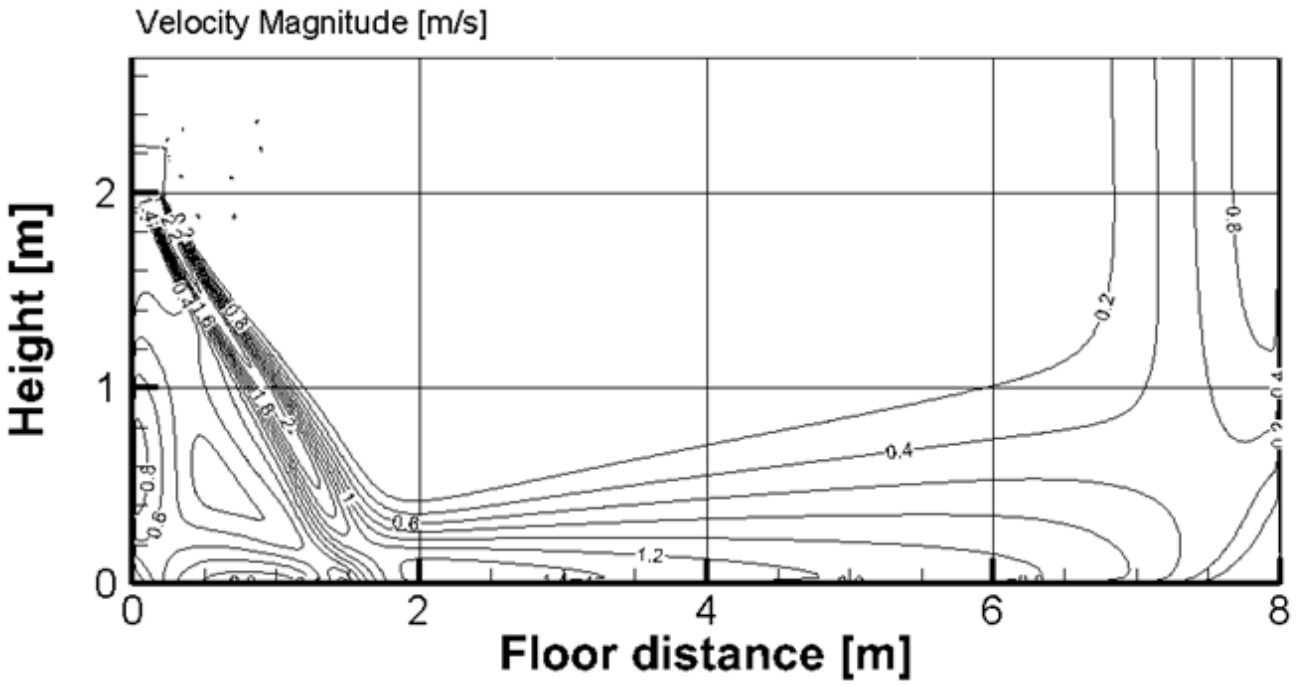

Heating temperature distributions

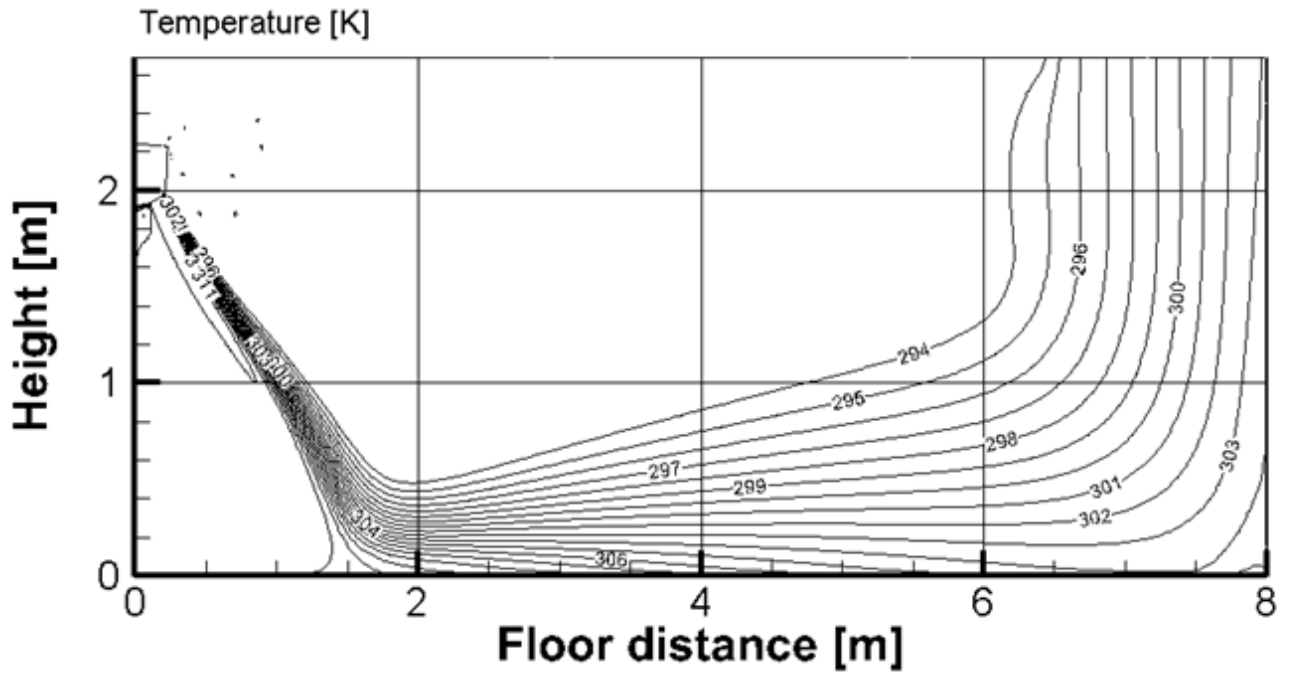

AURORA-24k

Discharge Angle 50°

Cooling airflow velocity distributions

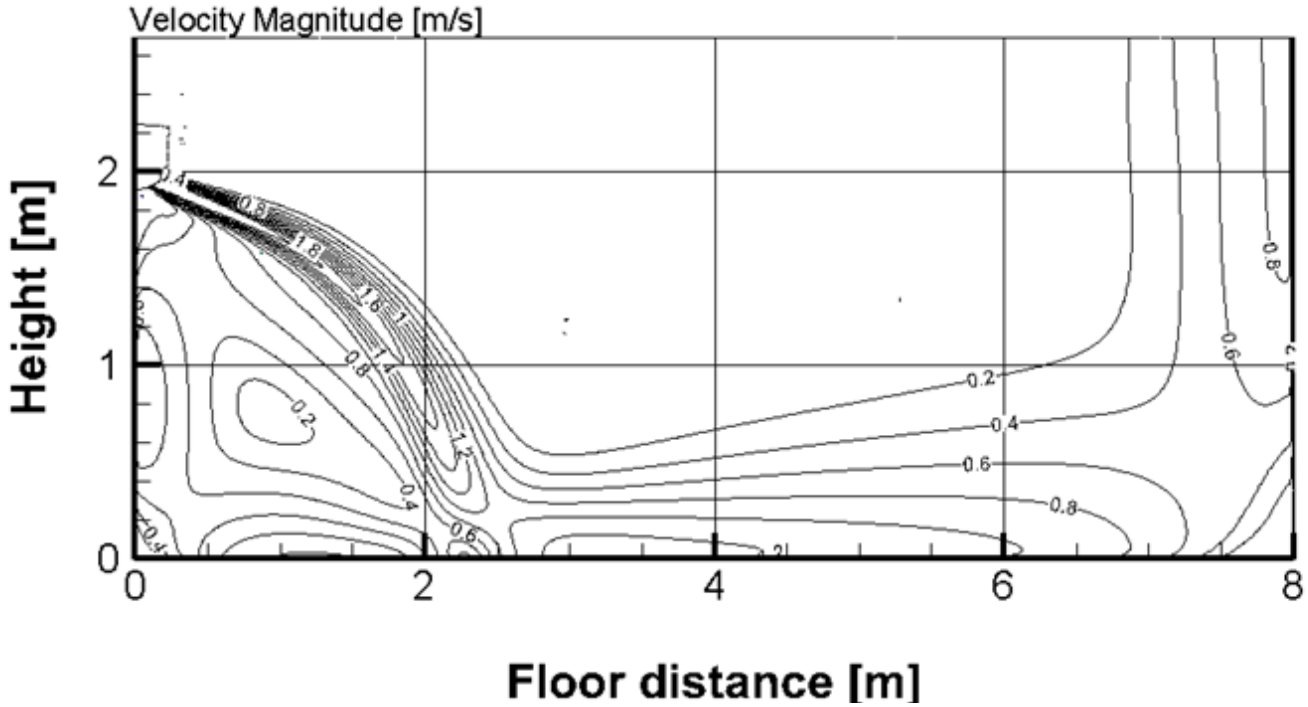

Cooling temperature distributions

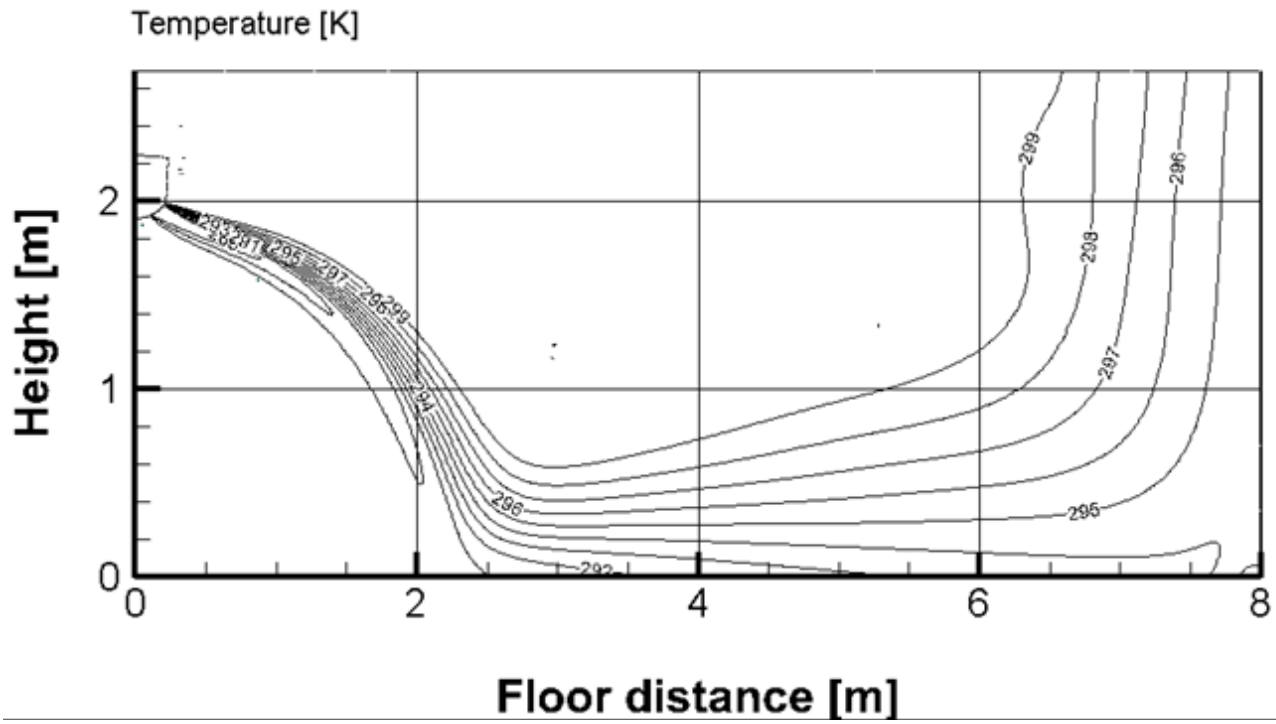

AURORA-24k

Discharge Angle 67°

Heating airflow velocity distributions

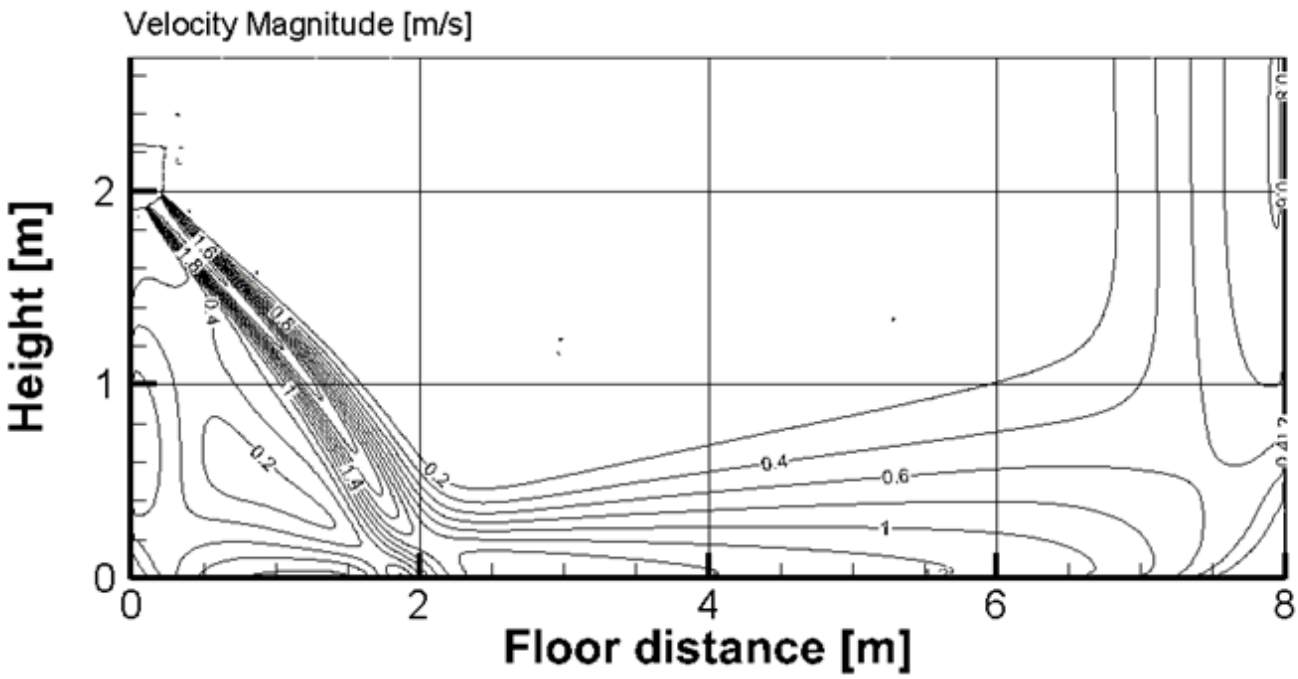

Heating temperature distributions

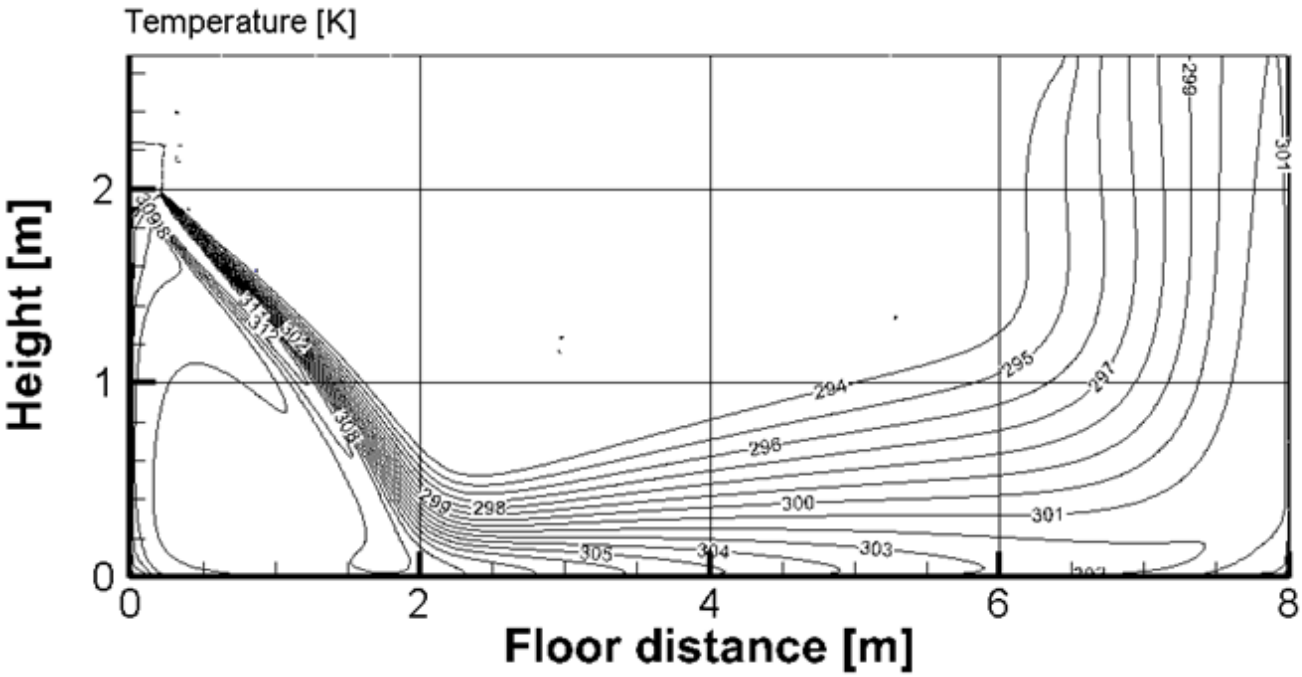

BREEZELESS-9k/12k

Discharge Angle 15°

Cooling airflow velocity distributions

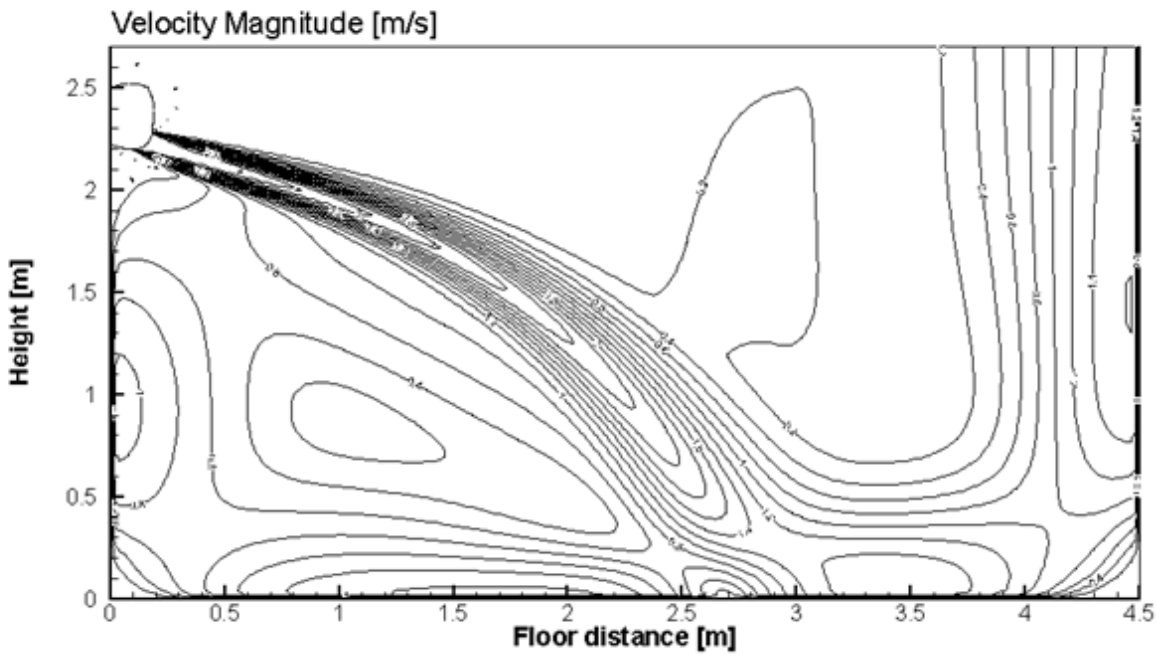

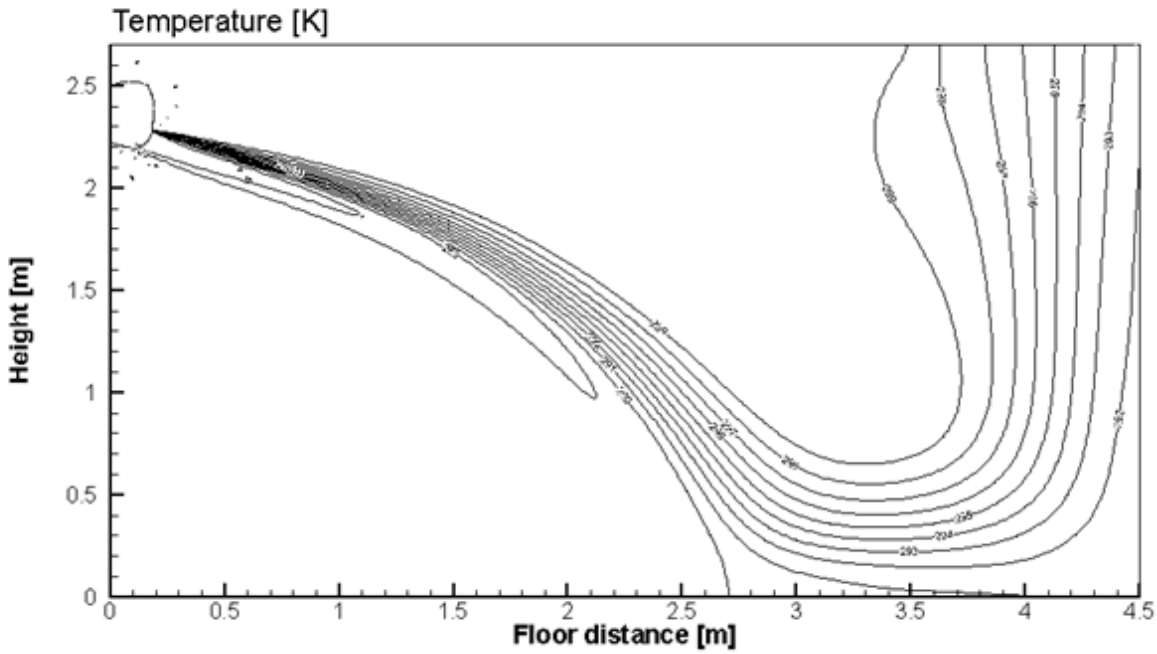

BREEZELESS-9k/12k

Discharge Angle 188°

Heating airflow velocity distributions

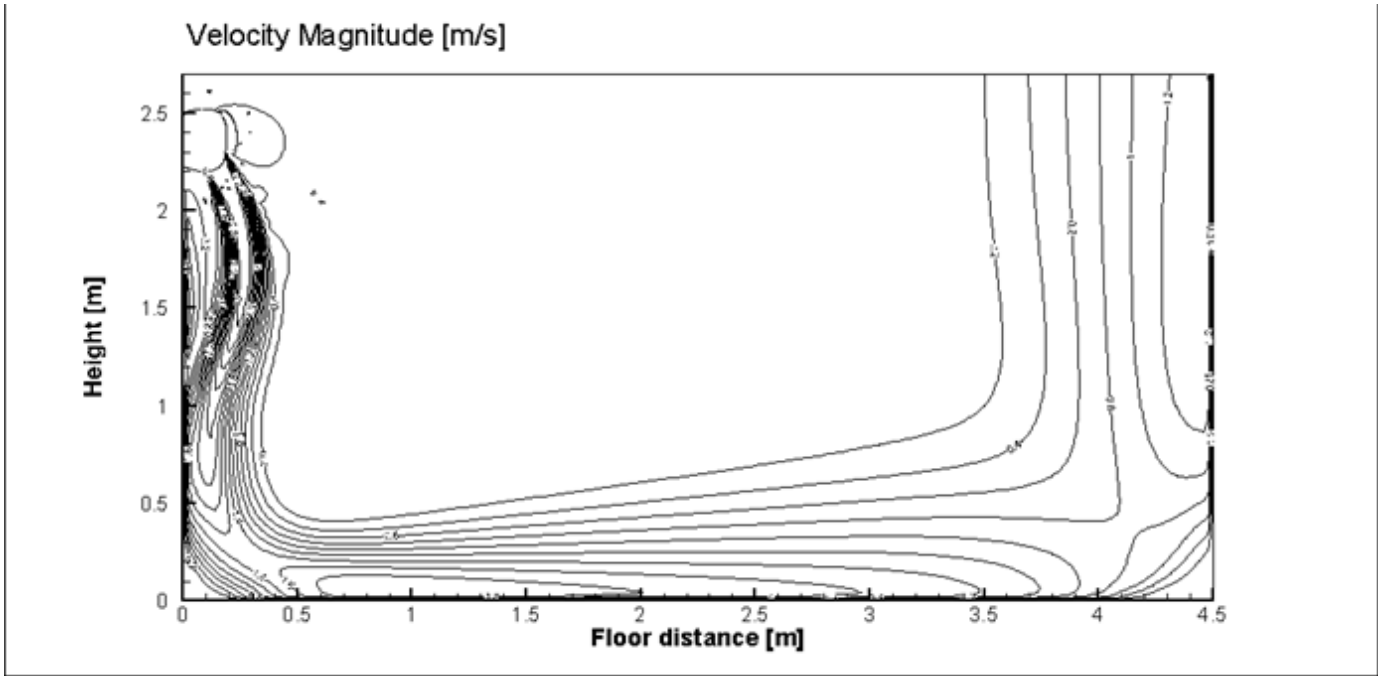

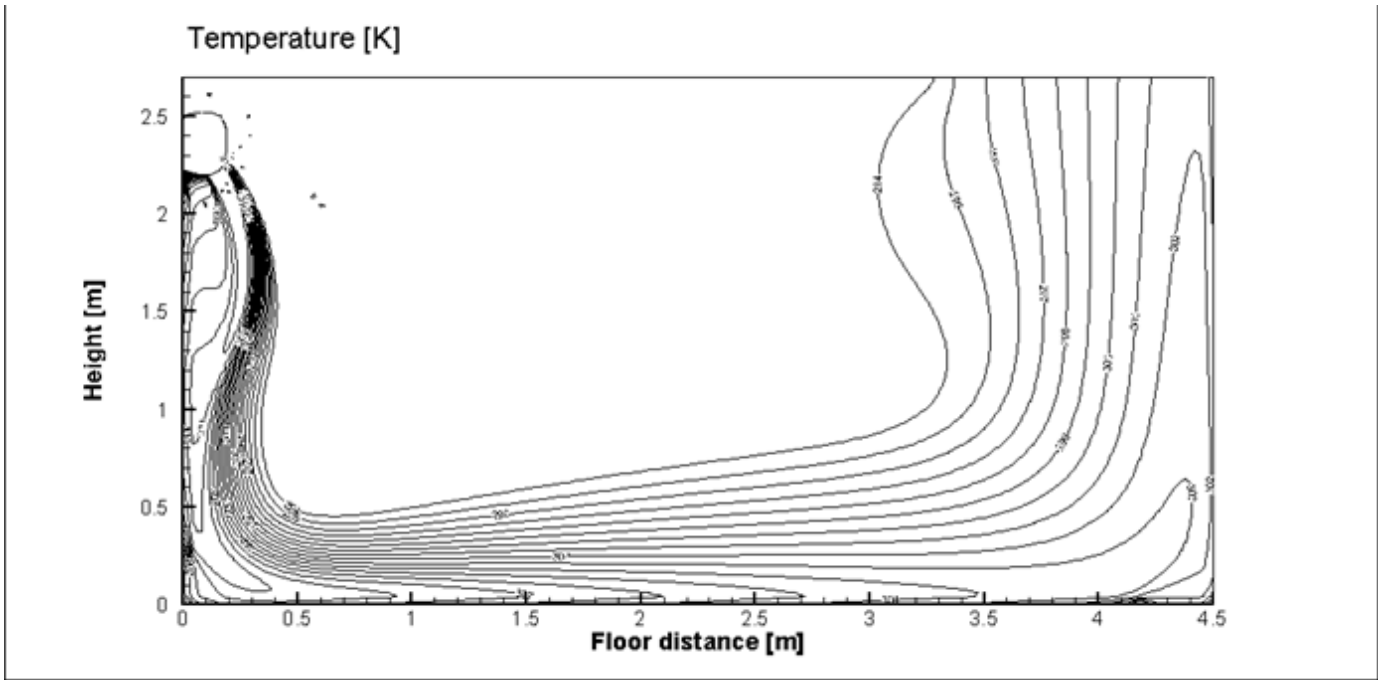

GLORY PRO 7k/9k

Cooling(ID: 27°C/80.6°F, OD: 35°C/95°F)

Discharge Angle 20°

Airflow velocity distributions

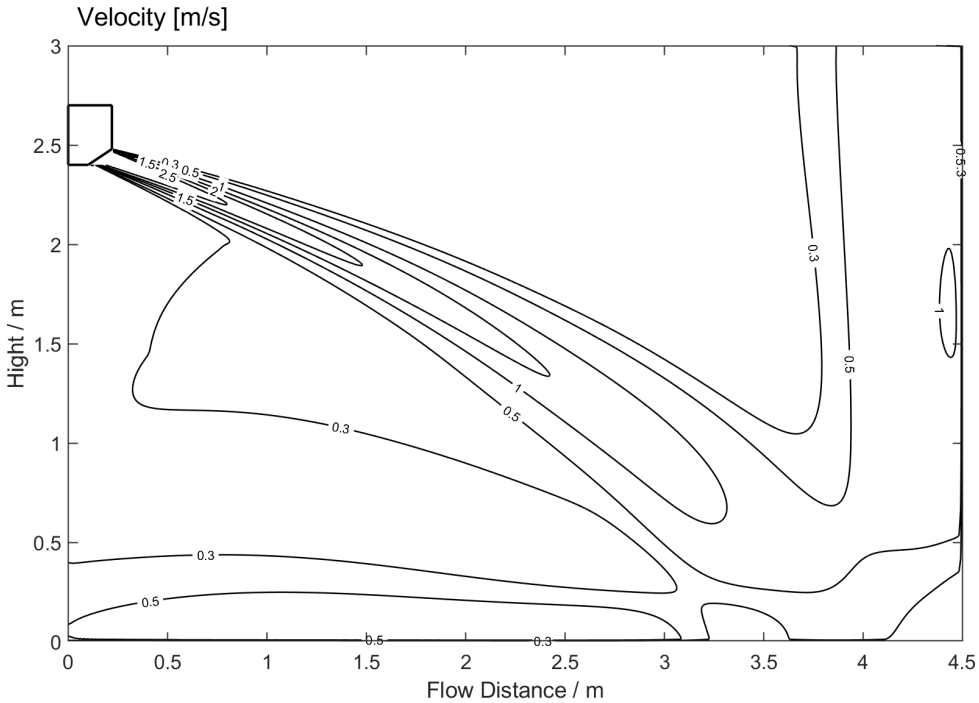

Temperature distributions

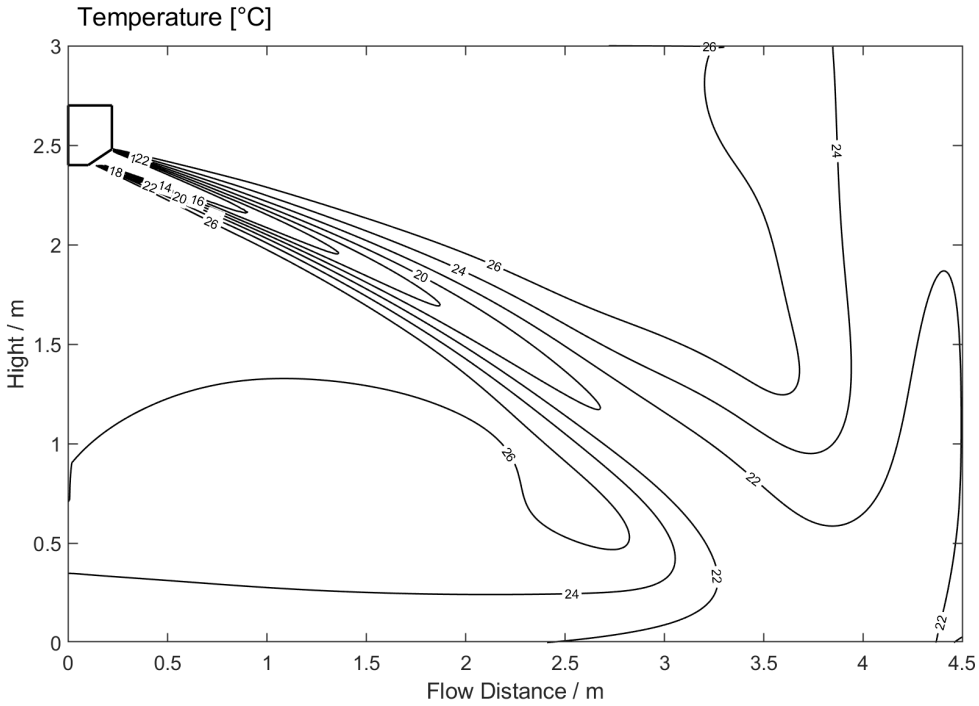

Heating(ID: 20°C/68°F, OD: 7°C/44.6°F)

Discharge Angle 65°

Airflow velocity distributions

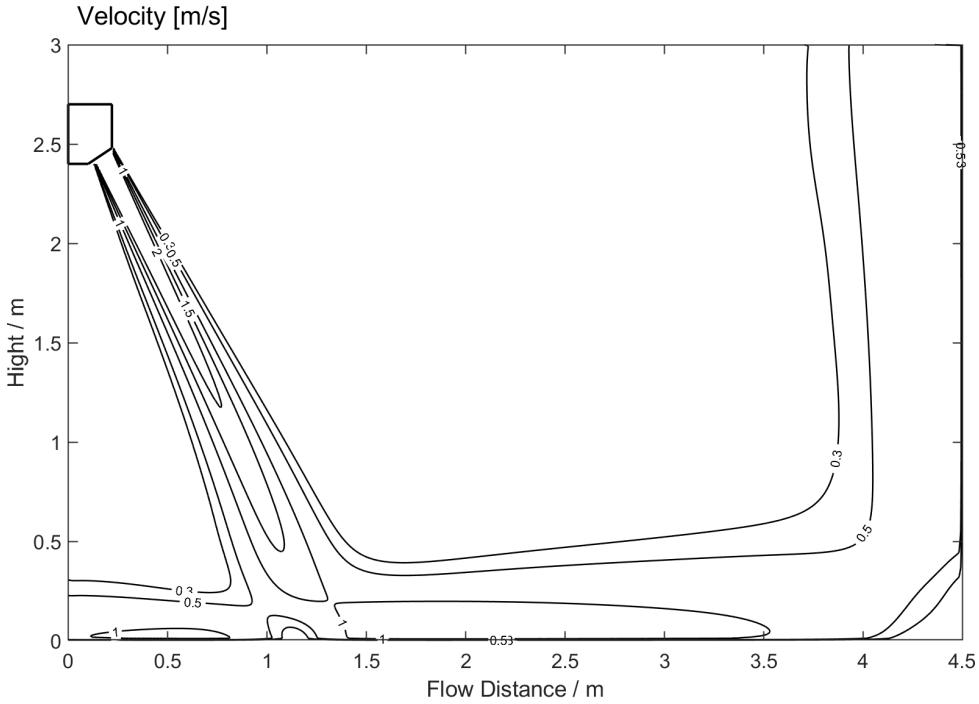

Temperature distributions

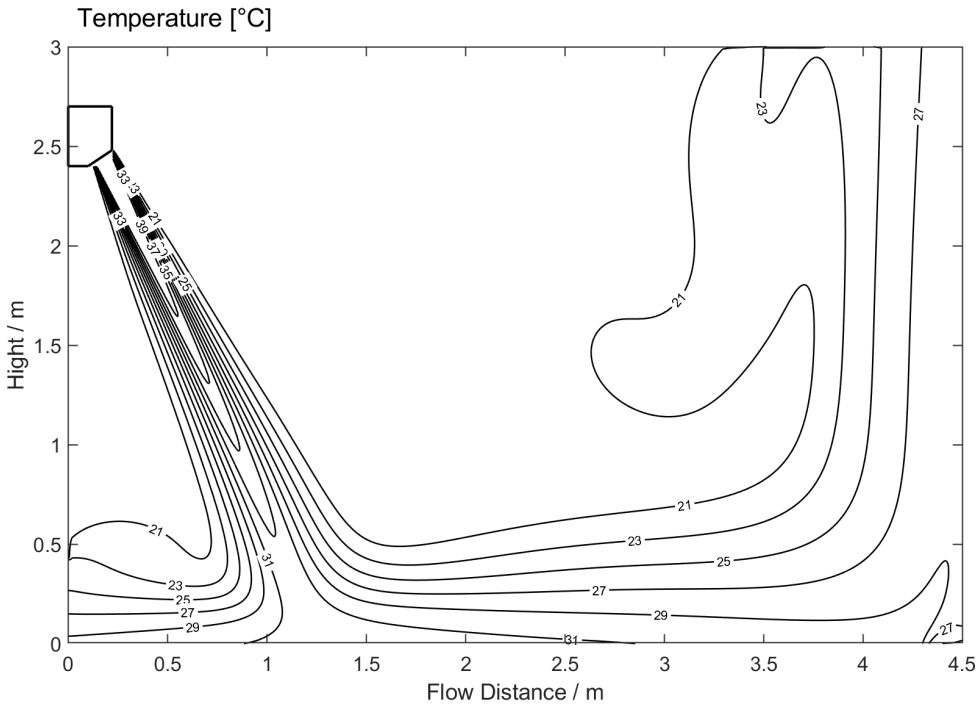

GLORY PRO 12k

Cooling(ID: 27°C/80.6°F, OD: 35°C/95°F)

Discharge Angle 20°

Airflow velocity distributions

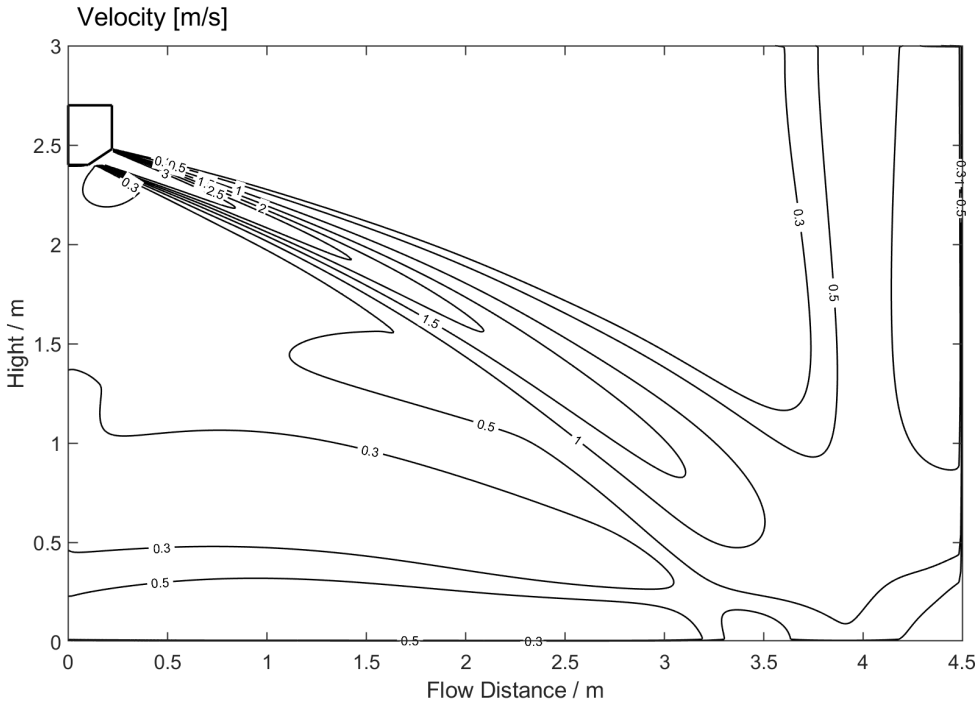

Temperature distributions

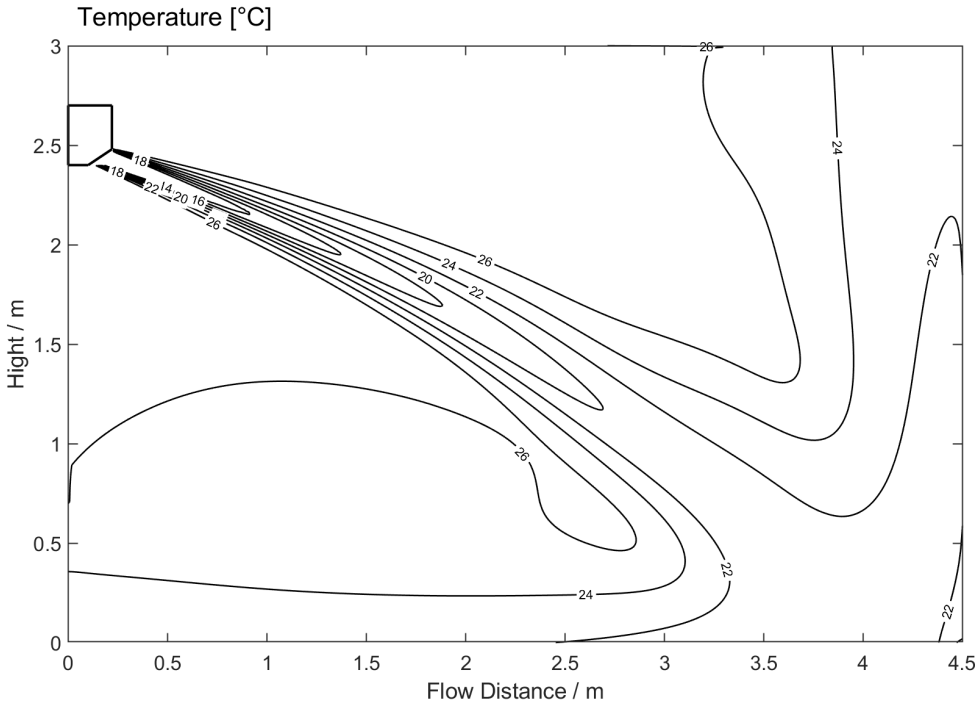

Heating(ID: 20°C/68°F, OD: 7°C/44.6°F)

Discharge Angle 65°

Airflow velocity distributions

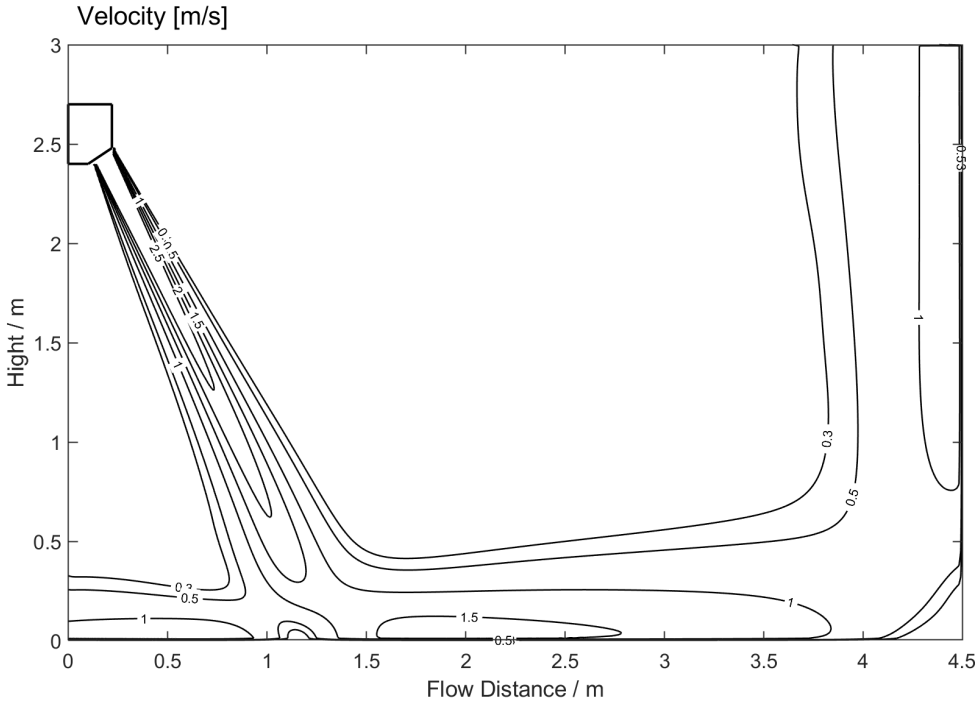

Temperature distributions

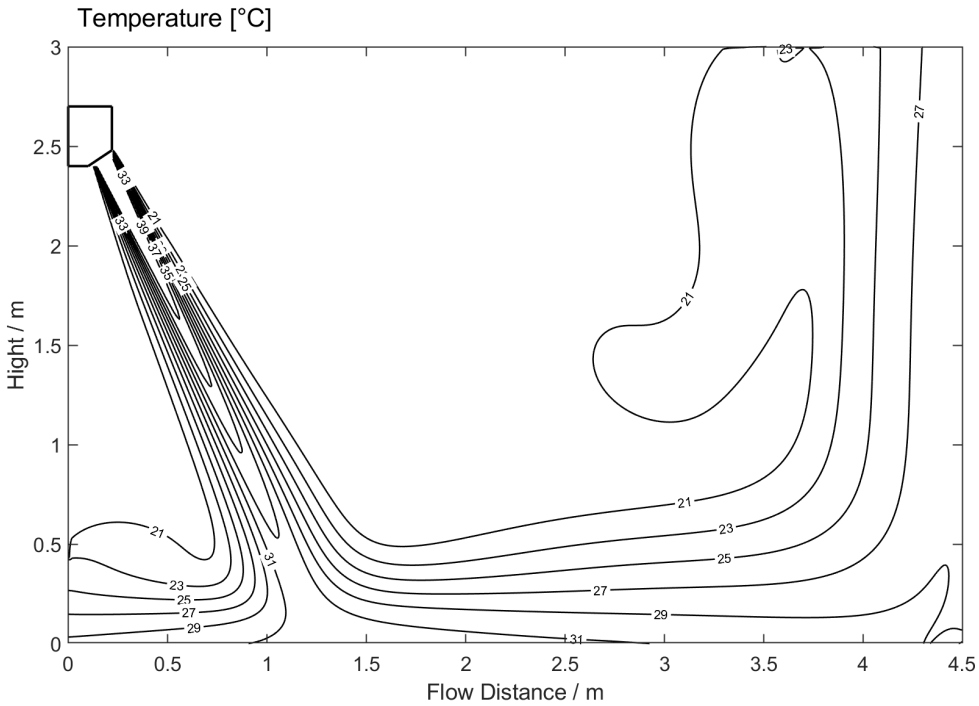

GLORY PRO 18k

Cooling(ID: 27°C/80.6°F, OD: 35°C/95°F)

Discharge Angle 18°

Airflow velocity distributions

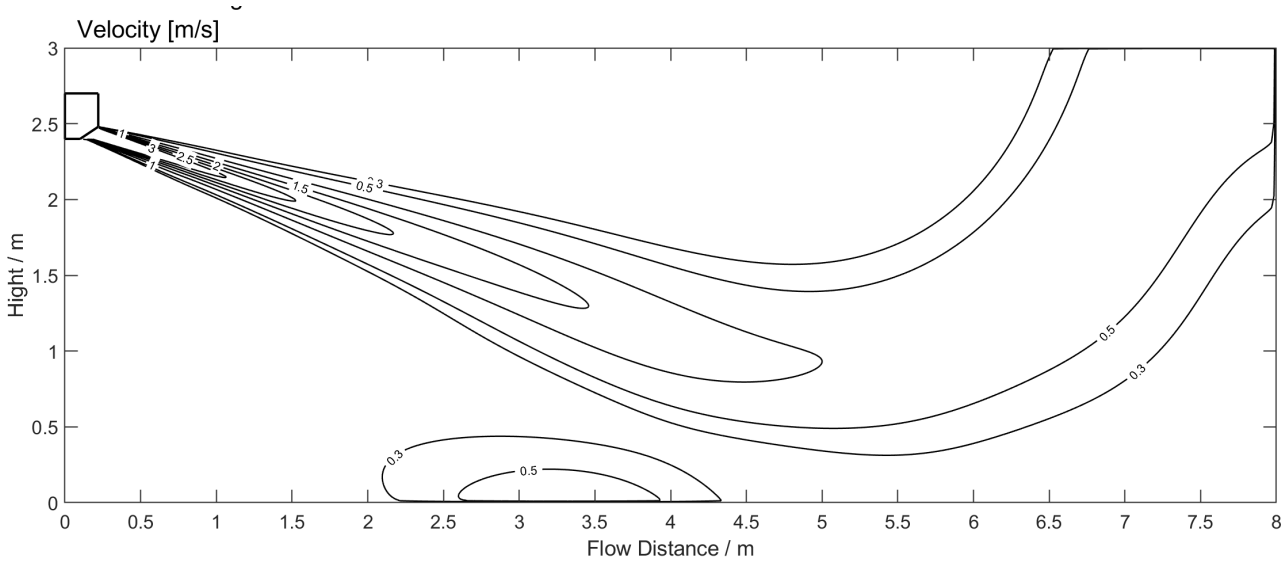

Temperature distributions

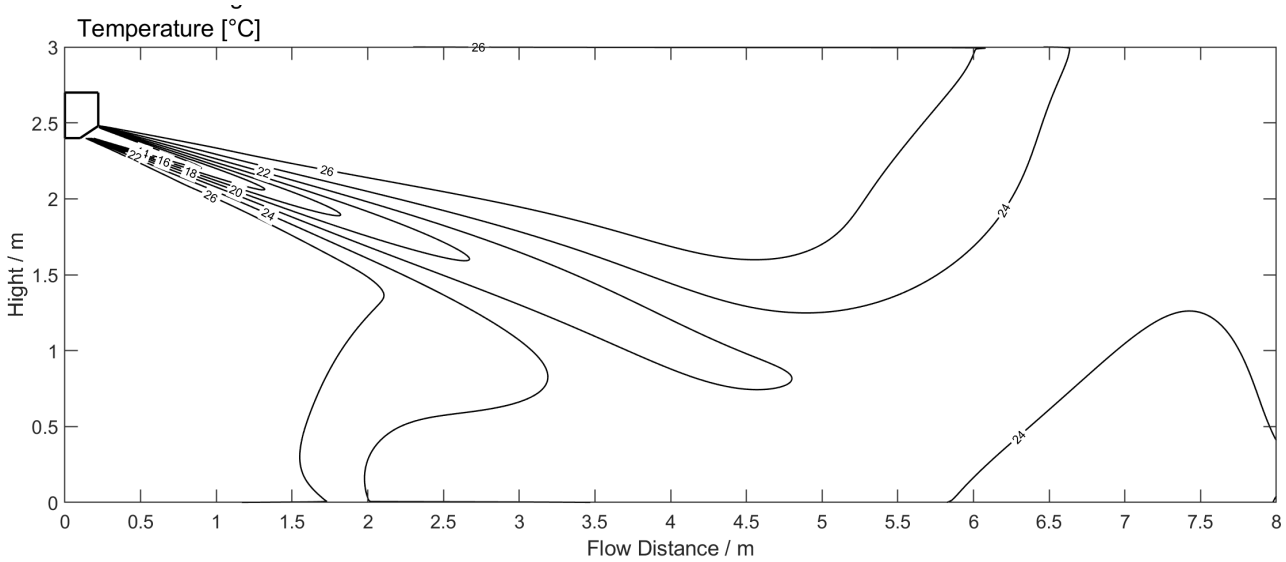

Specifications

Heating(ID: 20°C/68°F, OD: 7°C/44.6°F)

Discharge Angle 62°

Airflow velocity distributions

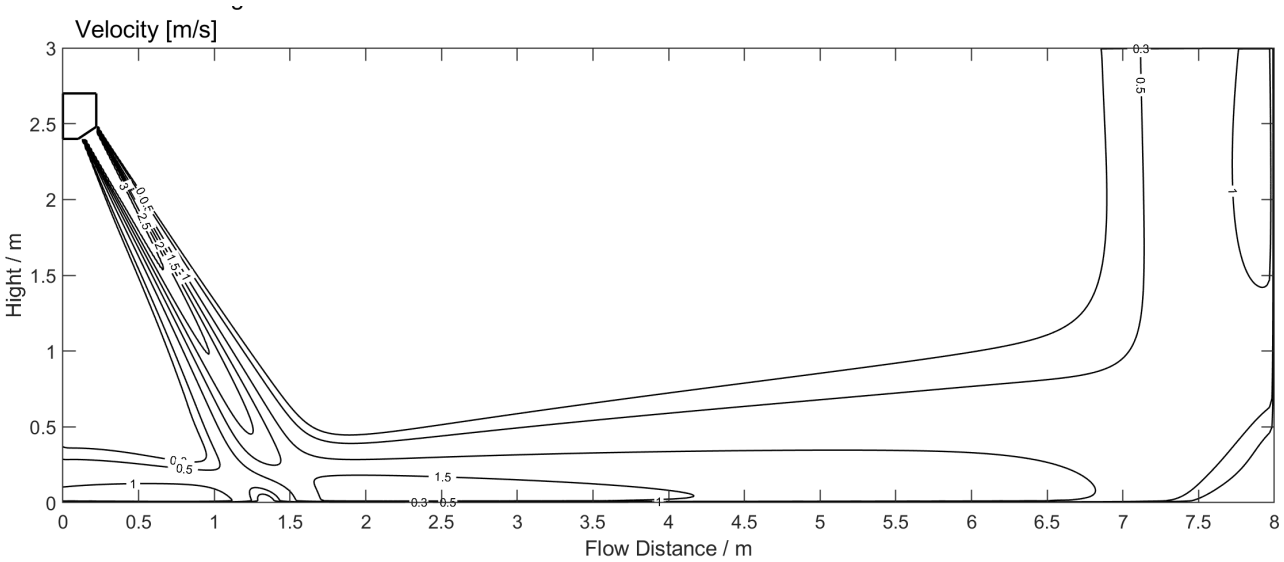

Temperature distributions

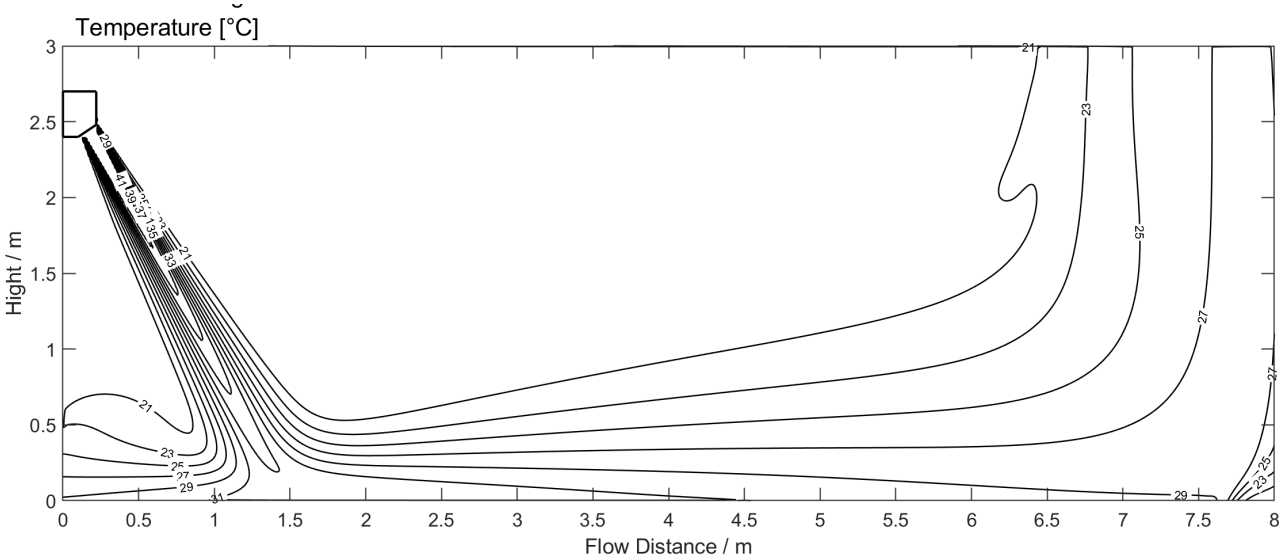

GLORY PRO 24k

Cooling(ID: 27°C/80.6°F, OD: 35°C/95°F)

Discharge Angle 20°

Airflow velocity distributions

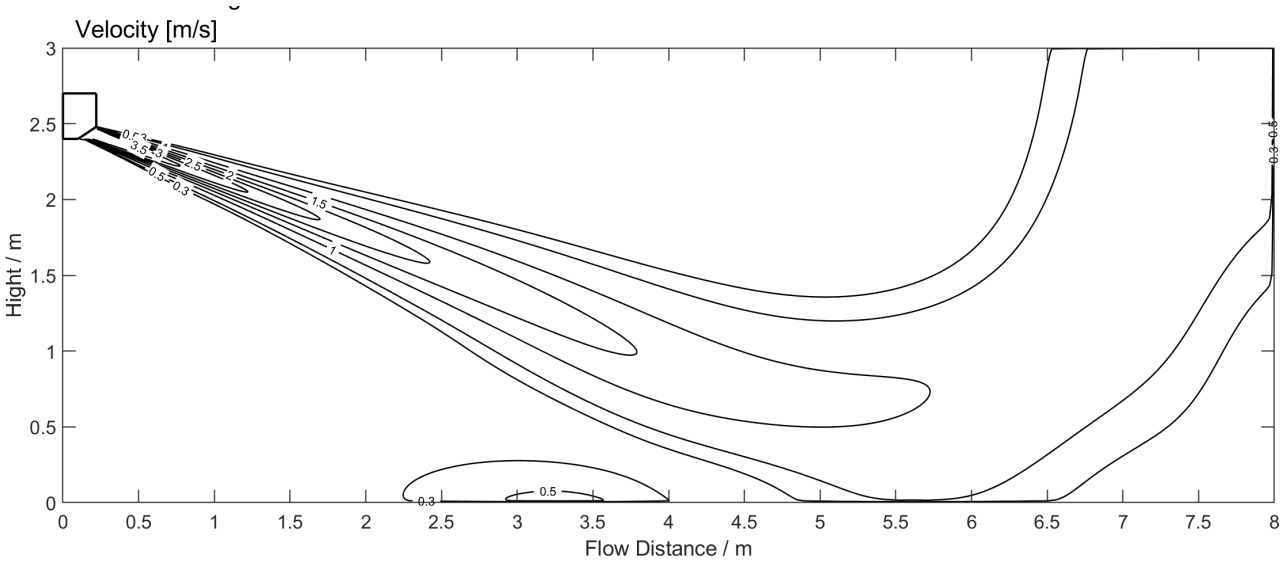

Temperature distributions

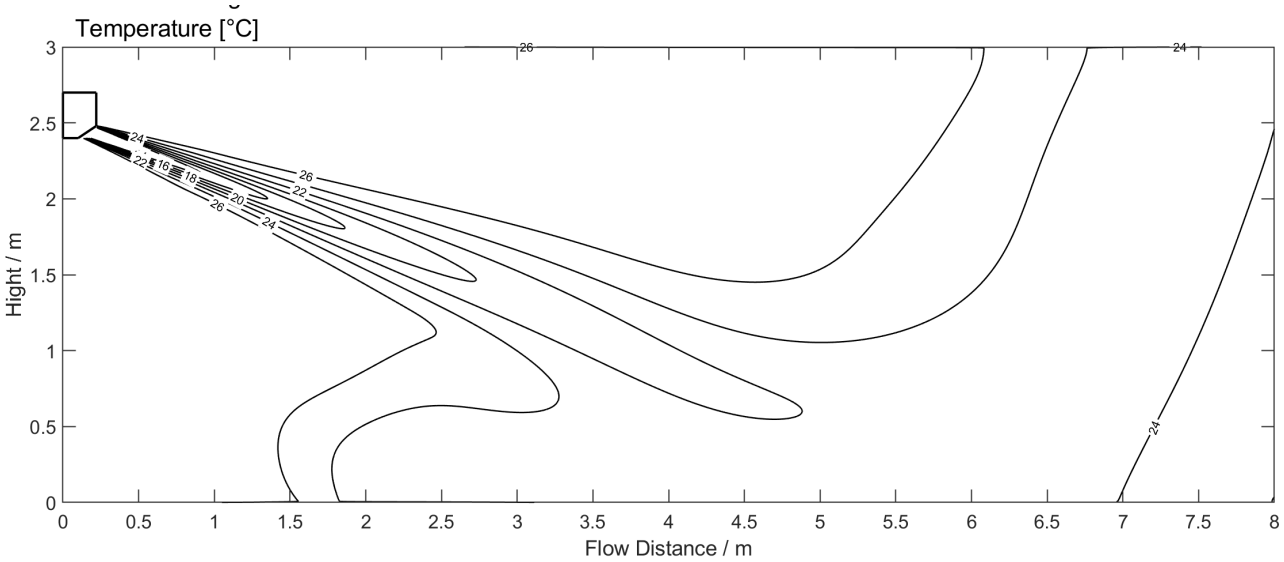

Heating(ID: 20°C/68°F, OD: 7°C/44.6°F)

Discharge Angle 68°

Airflow velocity distributions

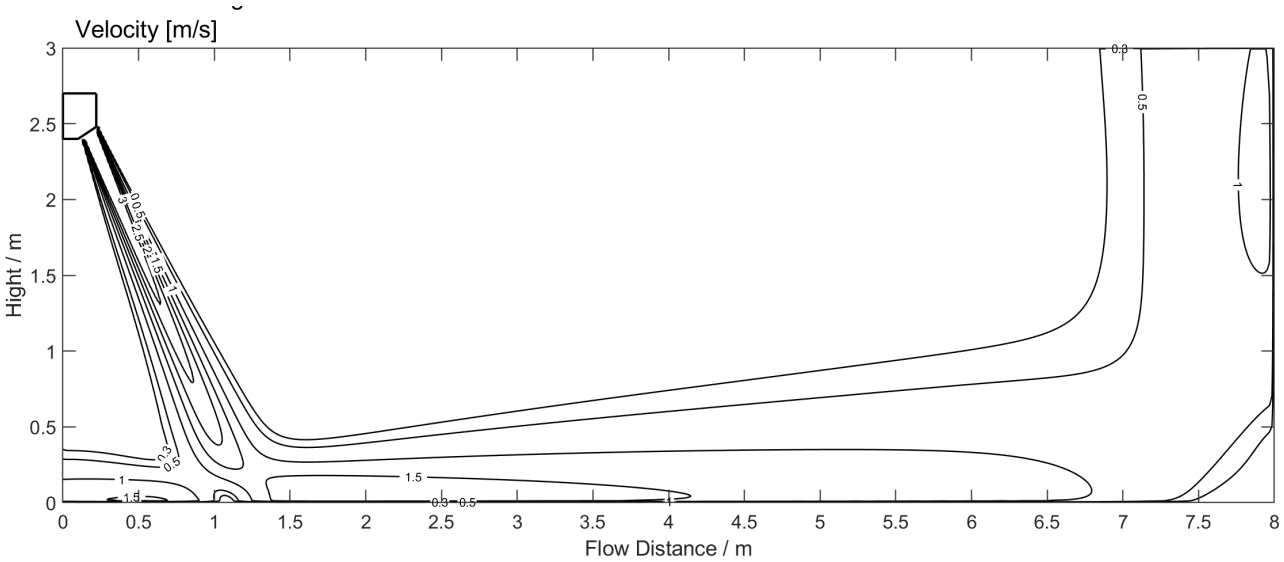

Temperature distributions

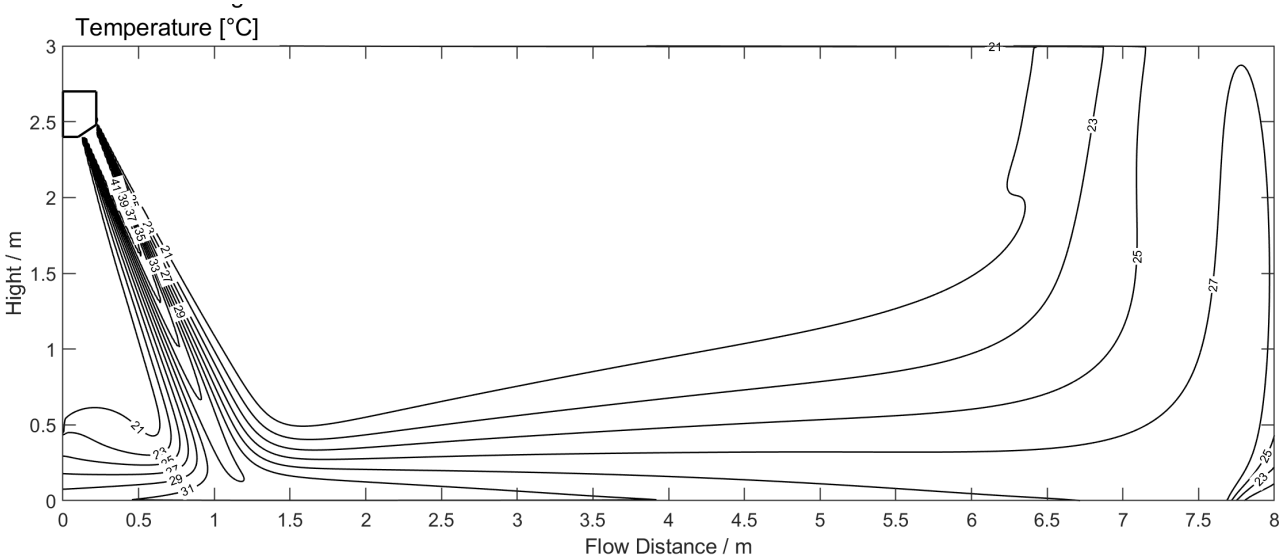

BREEZELESS E-9k

Discharge Angle 35°

Cooling airflow velocity distributions

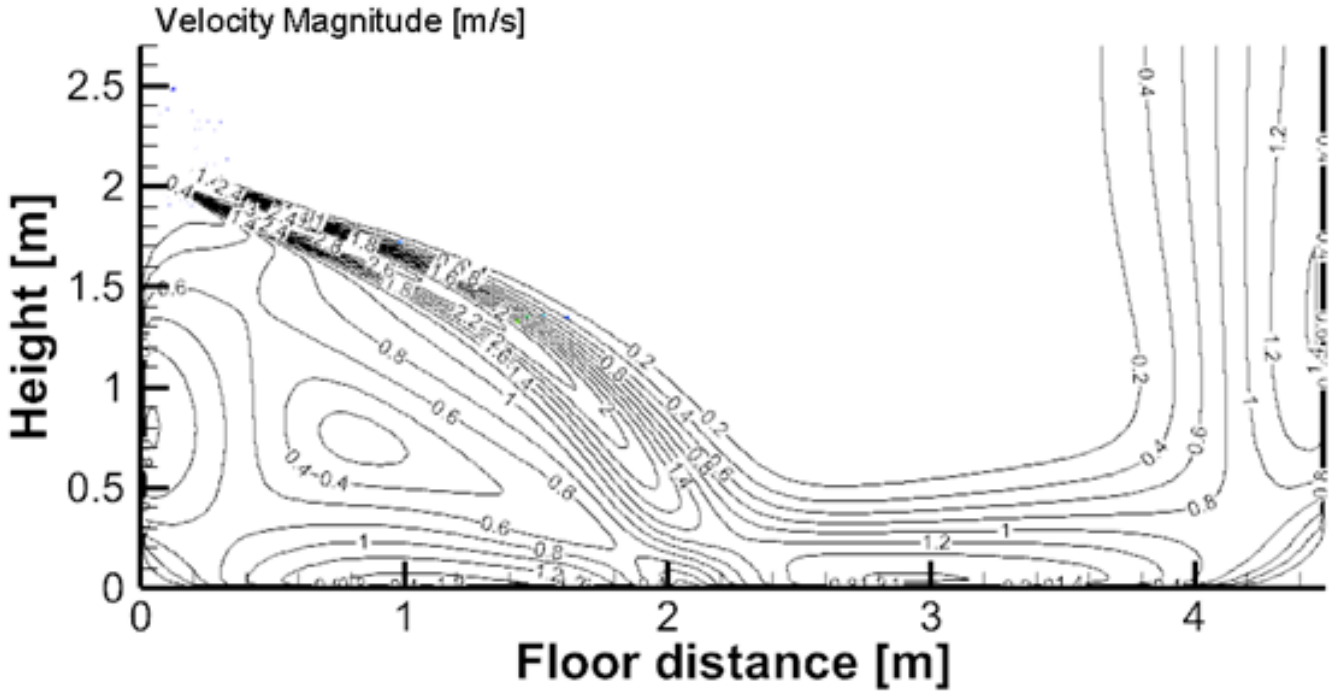

Cooling temperature distributions

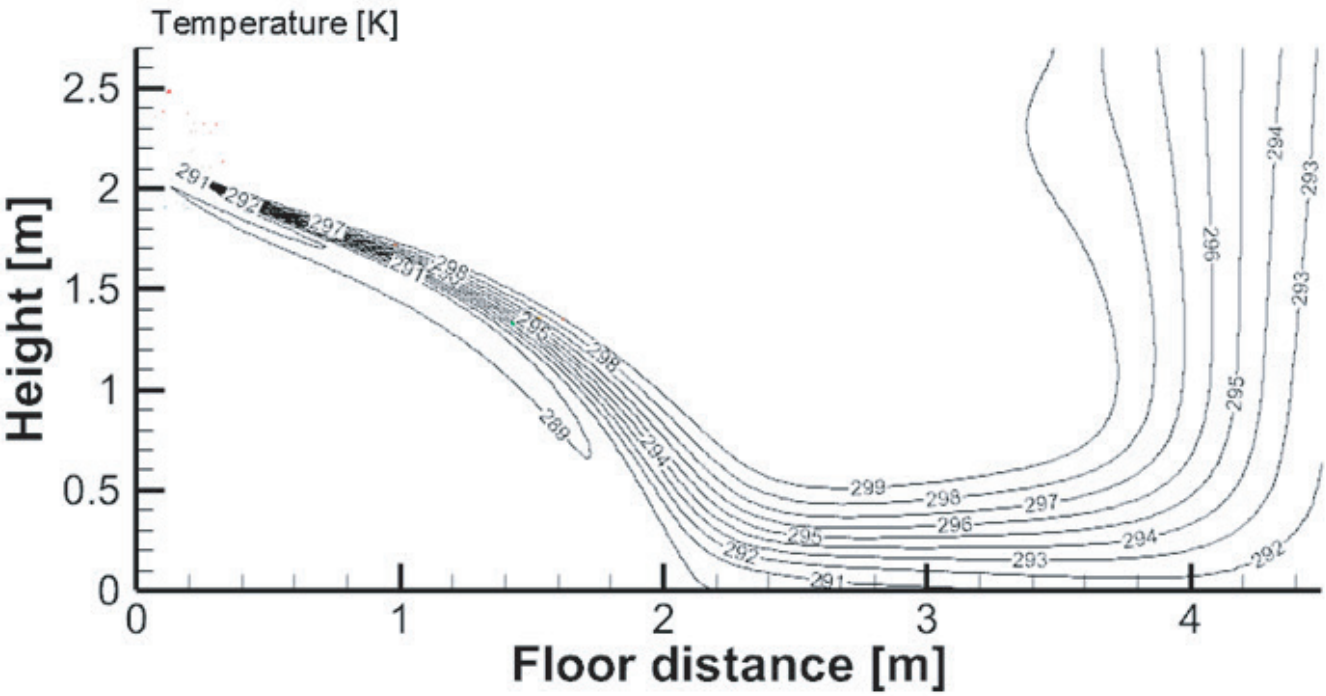

BREEZELESS E-9k

Discharge Angle 69°

Heating airflow velocity distributions

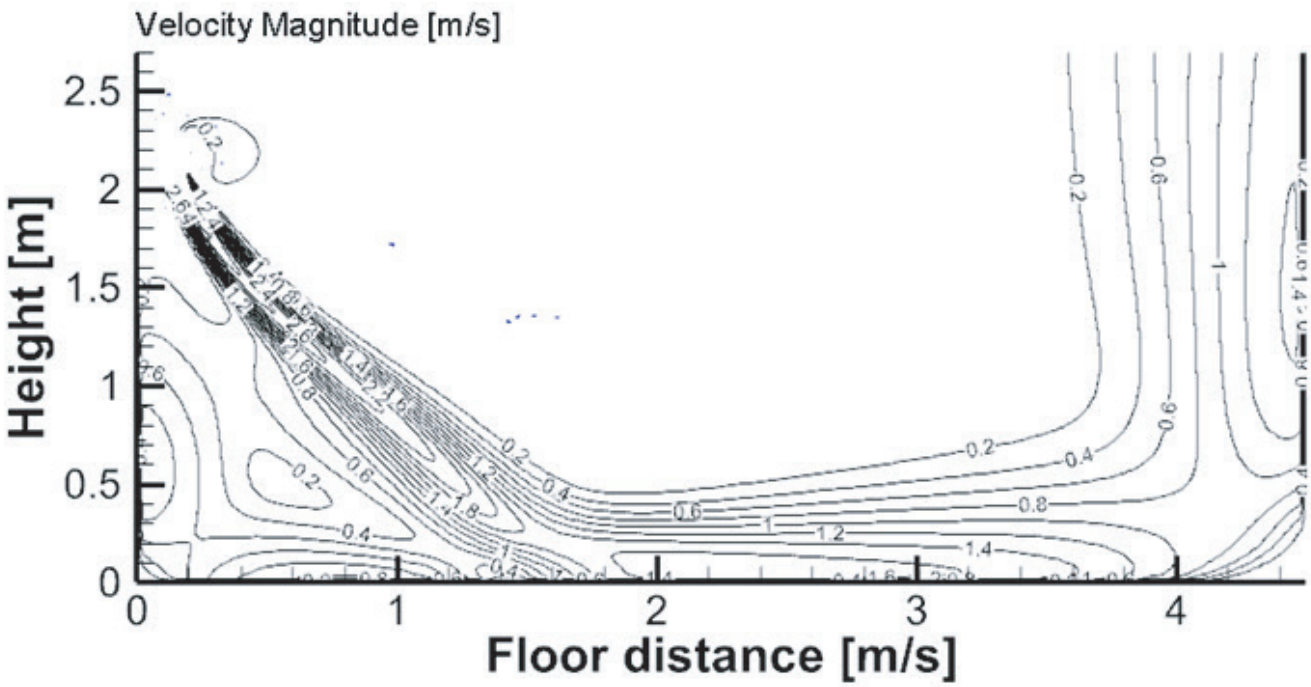

Heating temperature distributions

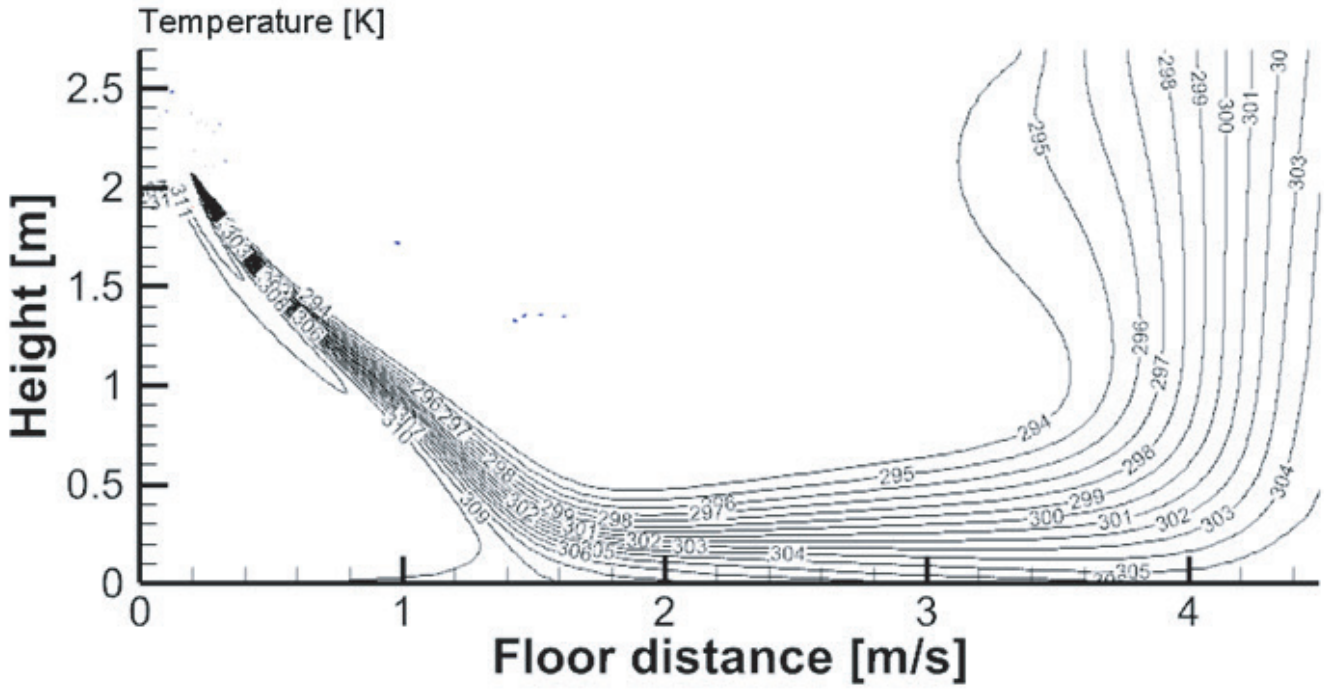

BREEZELESS E-12k

Discharge Angle 35°

Cooling airflow velocity distributions

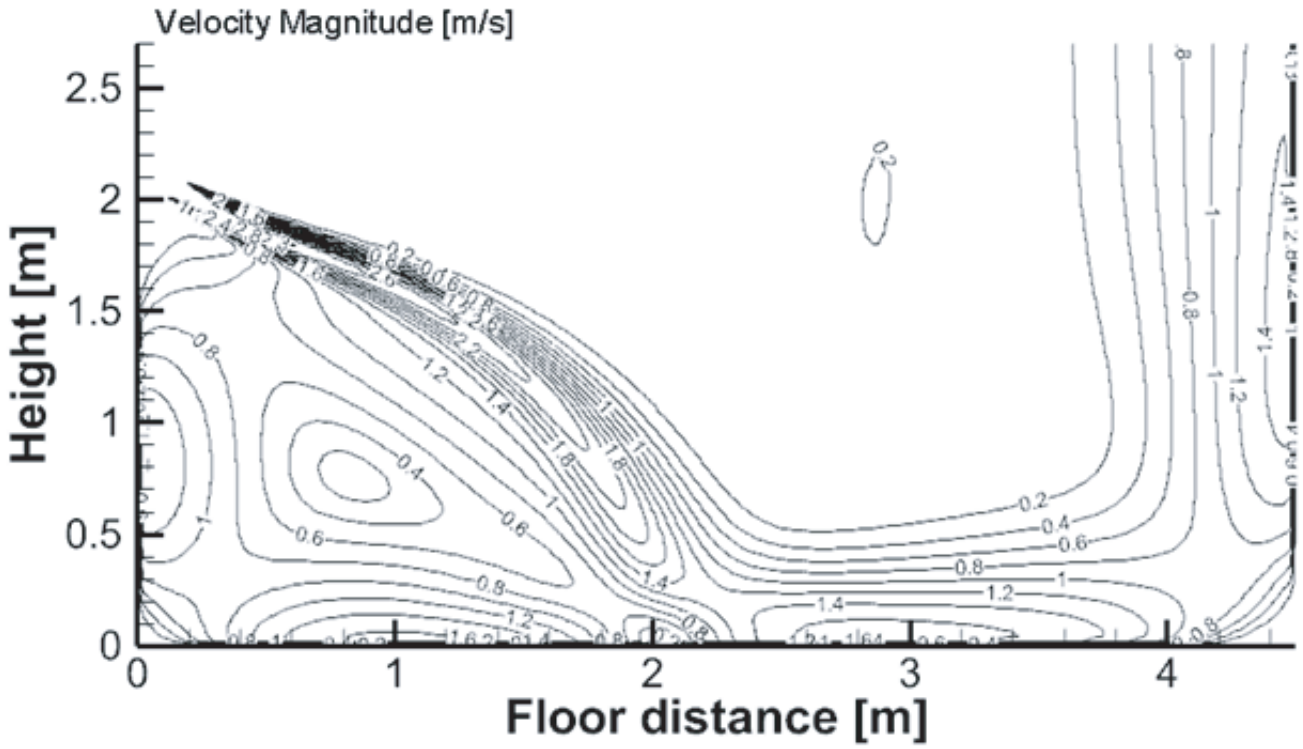

Cooling temperature distributions

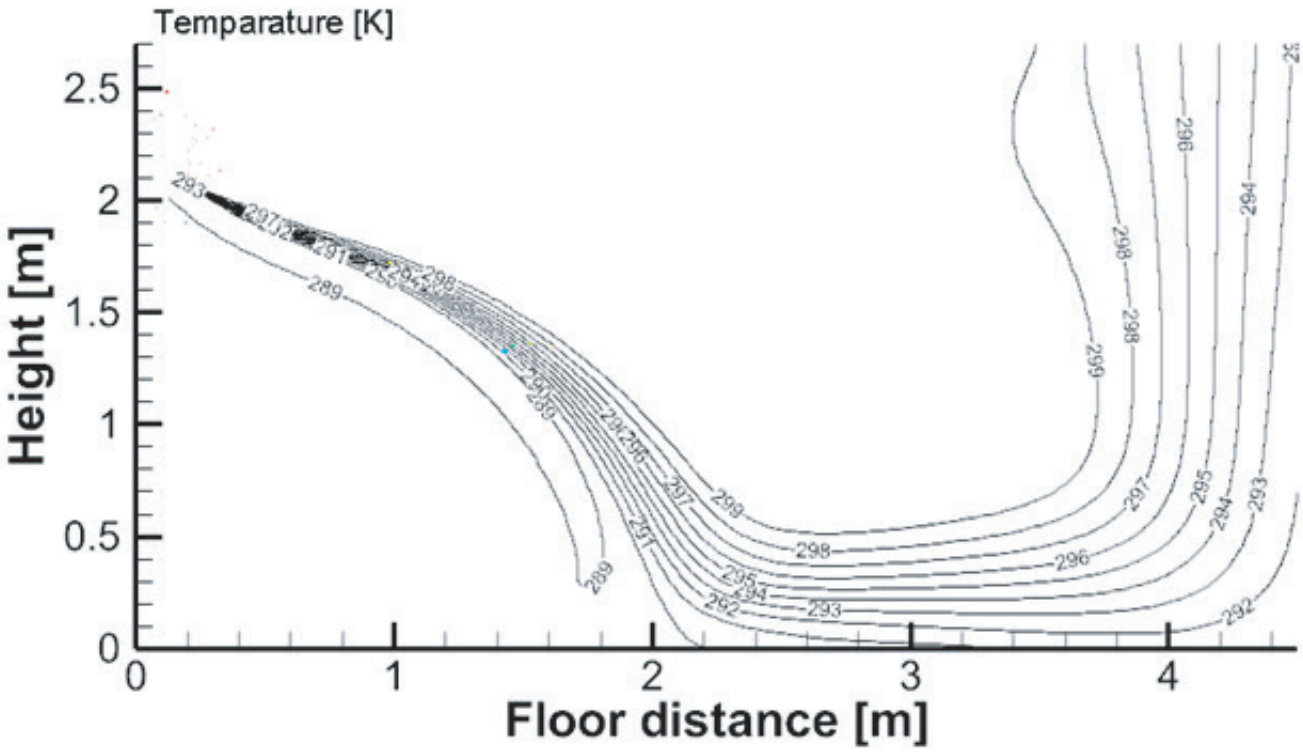

BREEZELESS E-12k

Discharge Angle 69°

Heating airflow velocity distributions

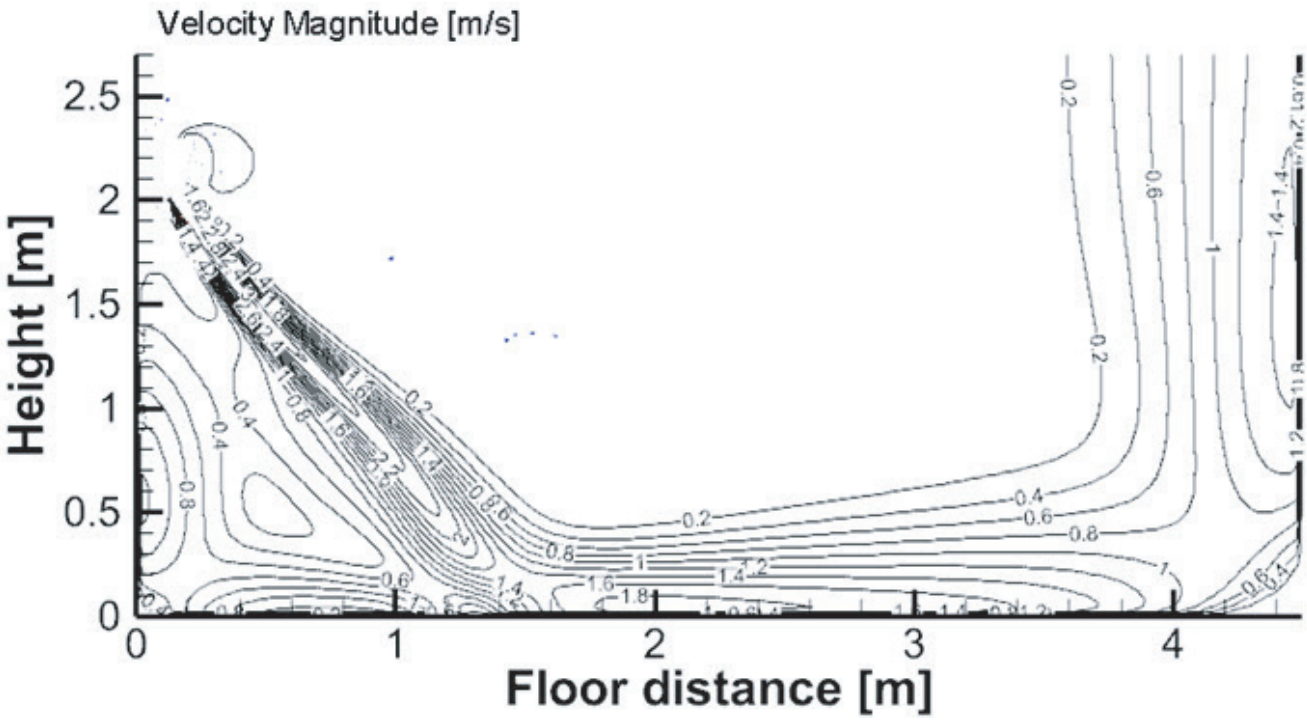

Heating temperature distributions

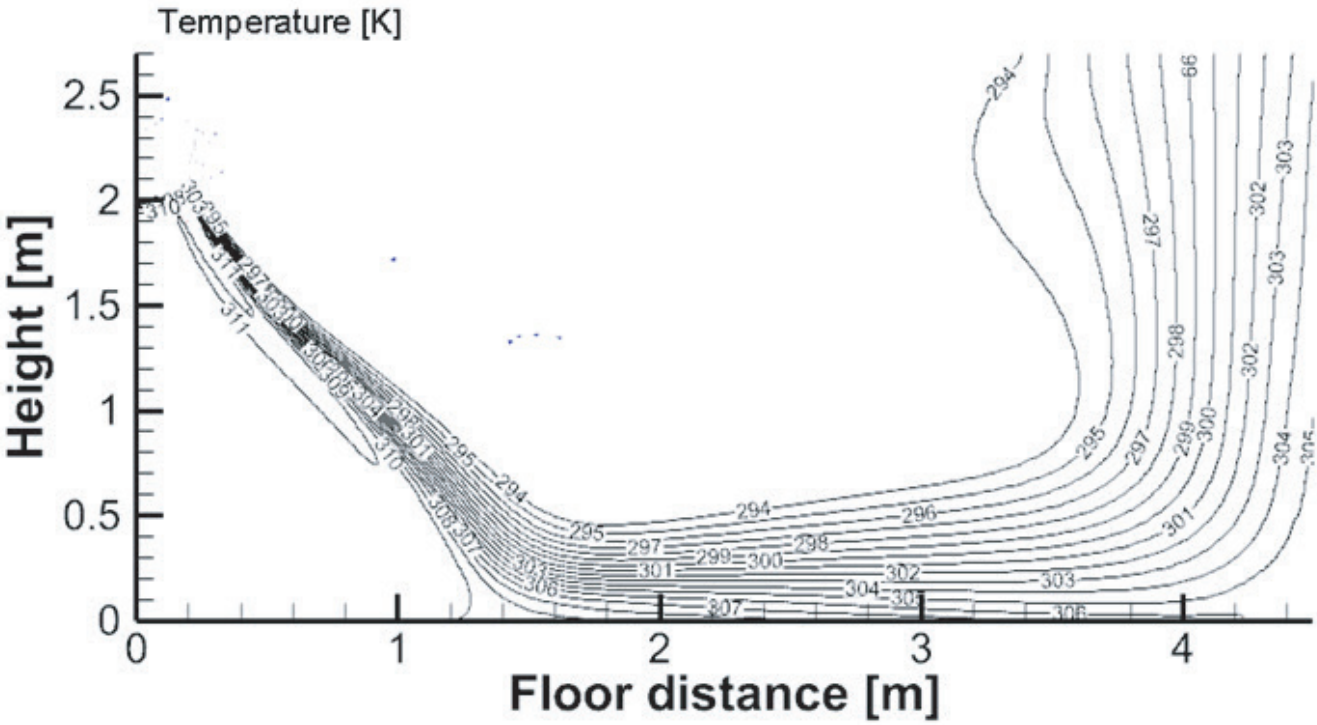

BREEZELESS E-18k

Discharge Angle 20°

Cooling airflow velocity distributions

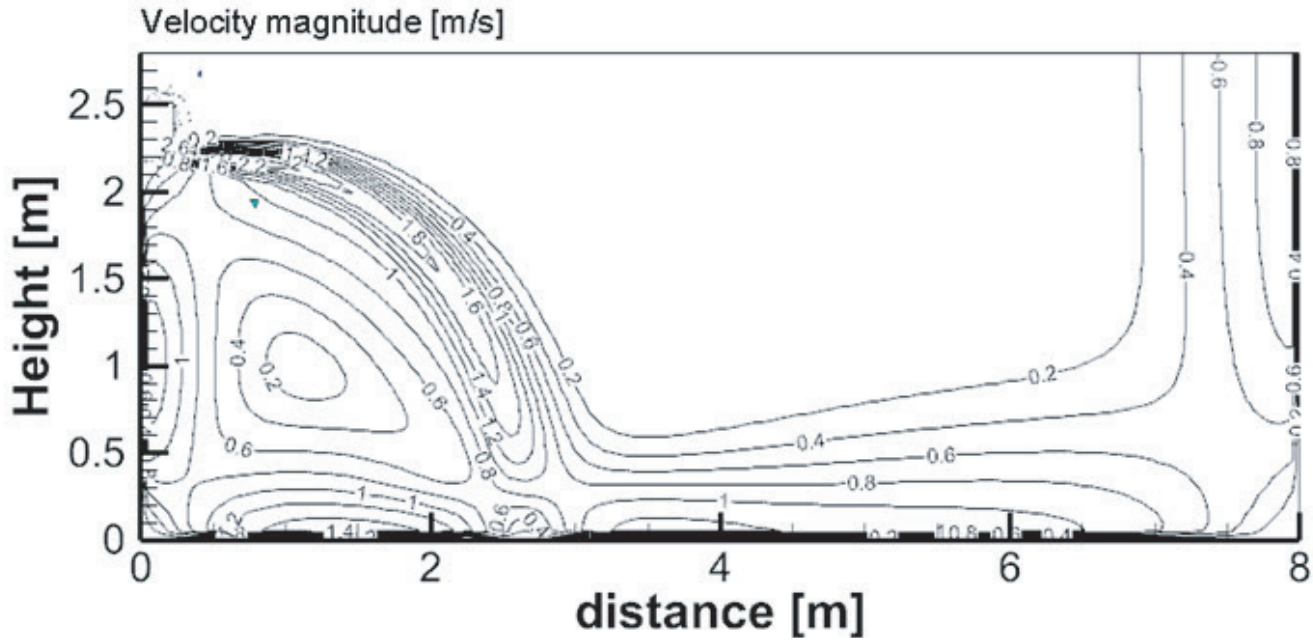

Cooling temperature distributions

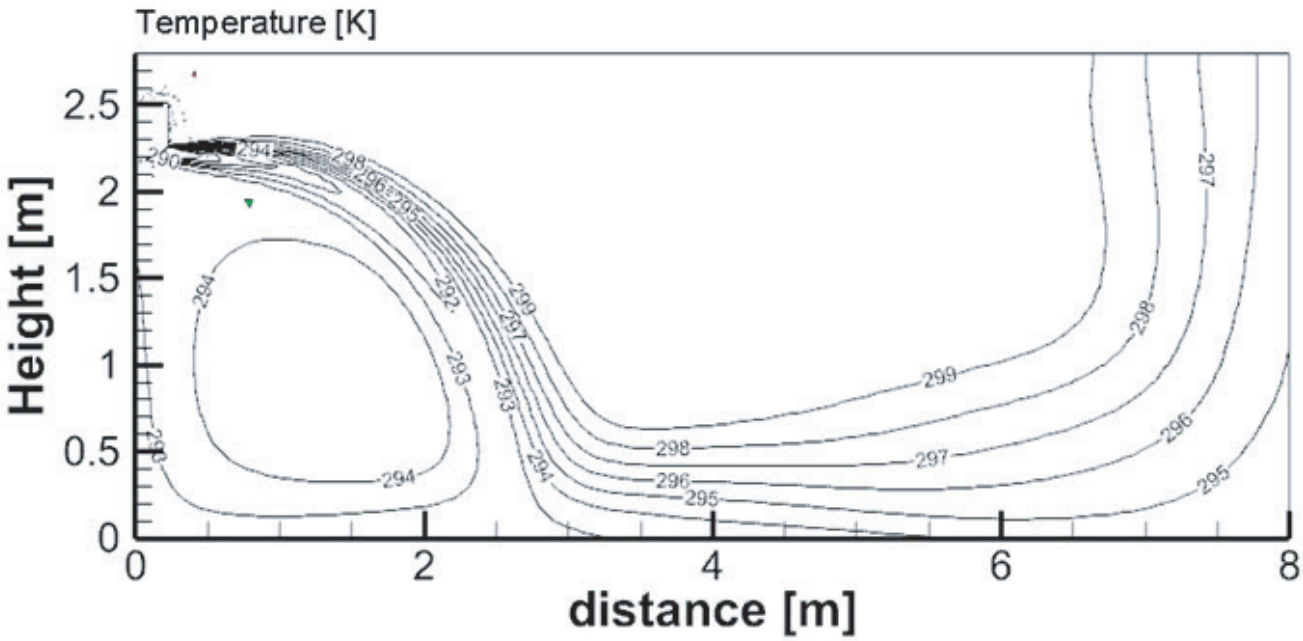

BREEZELESS E-18k

Discharge Angle 67°

Heating airflow velocity distributions

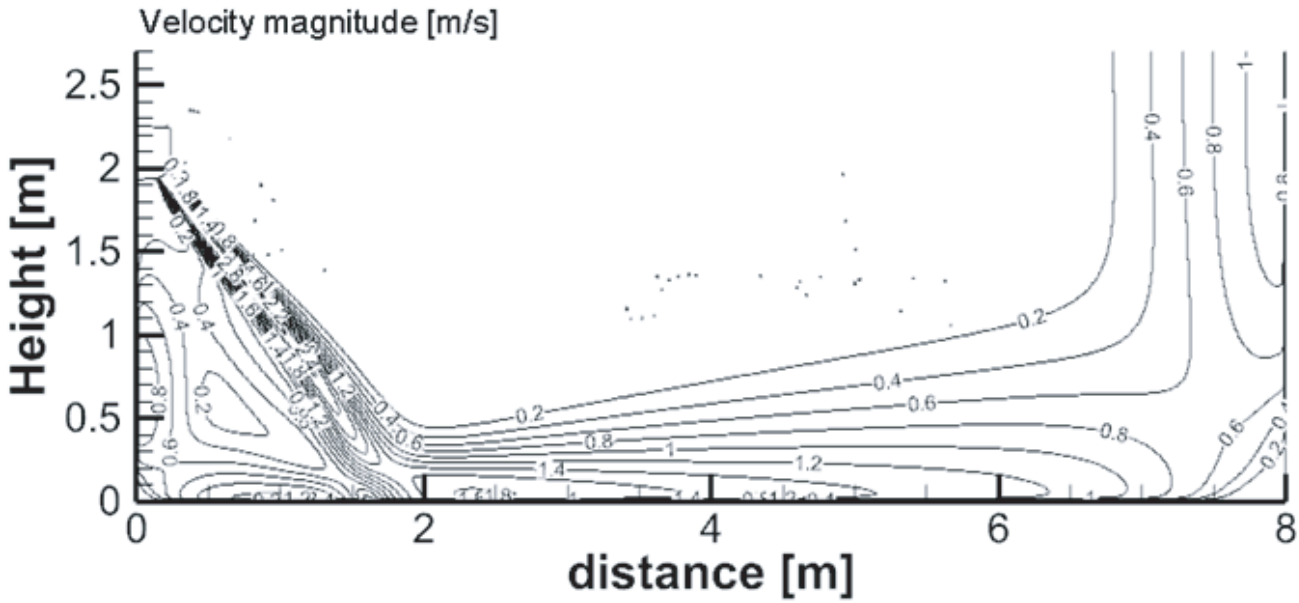

Heating temperature distributions

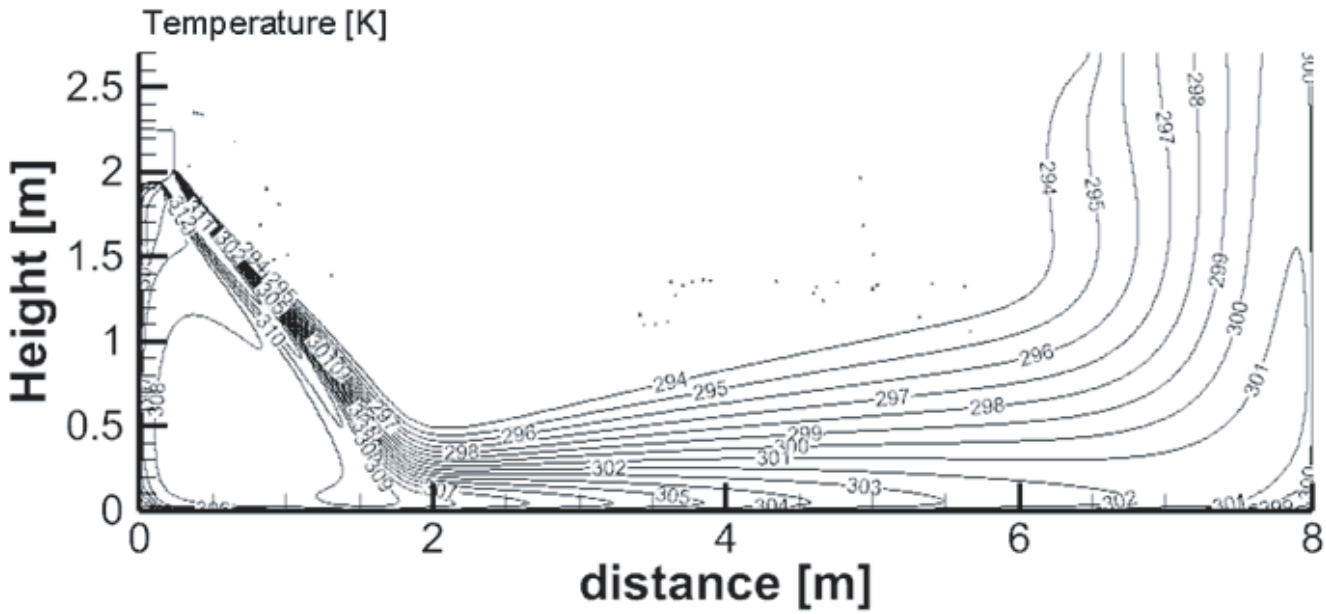

BREEZELESS E-24k

Discharge Angle 24°

Cooling airflow velocity distributions

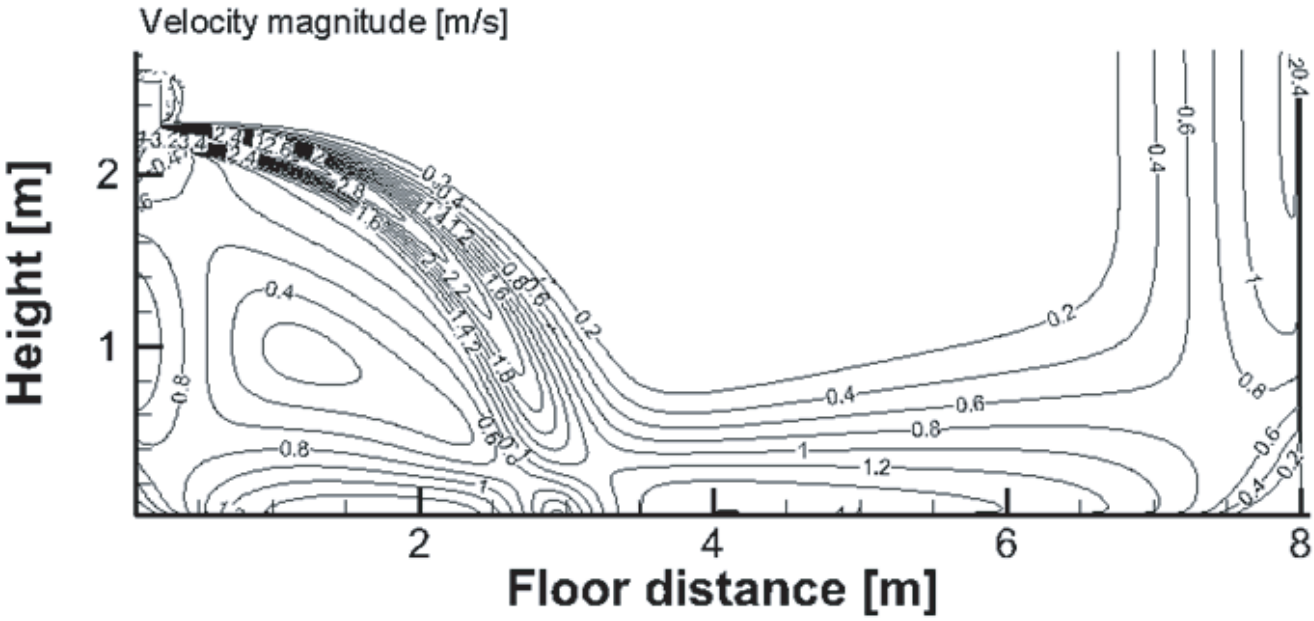

Cooling temperature distributions

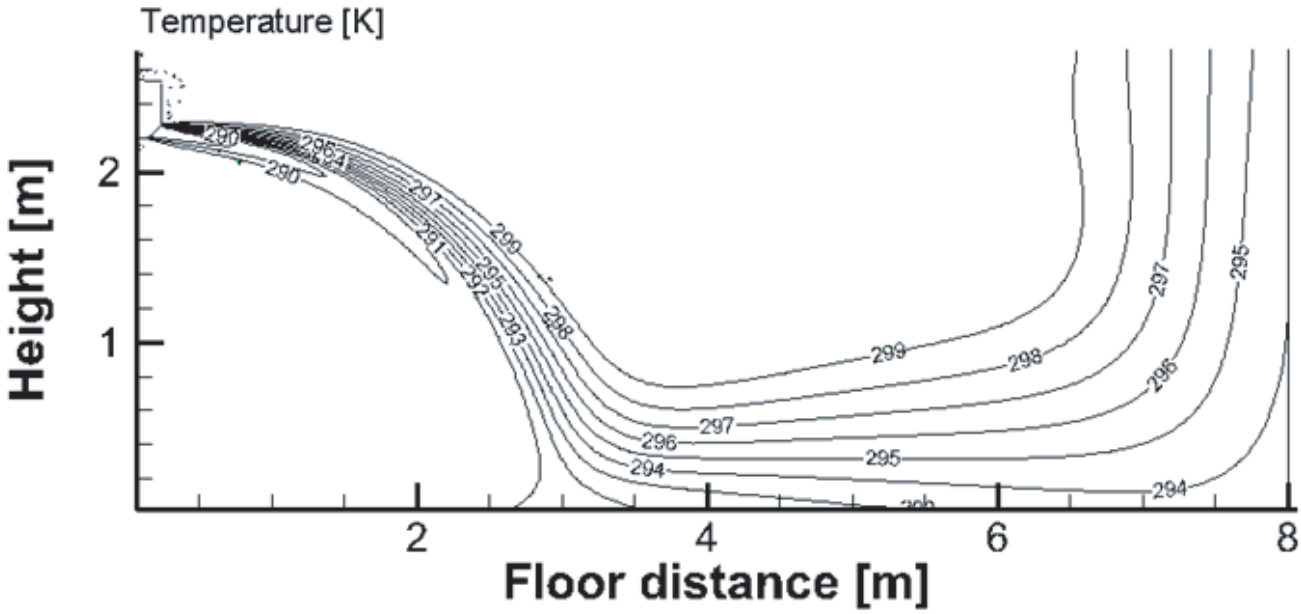

BREEZELESS E-24k

Discharge Angle 55°

Heating airflow velocity distributions

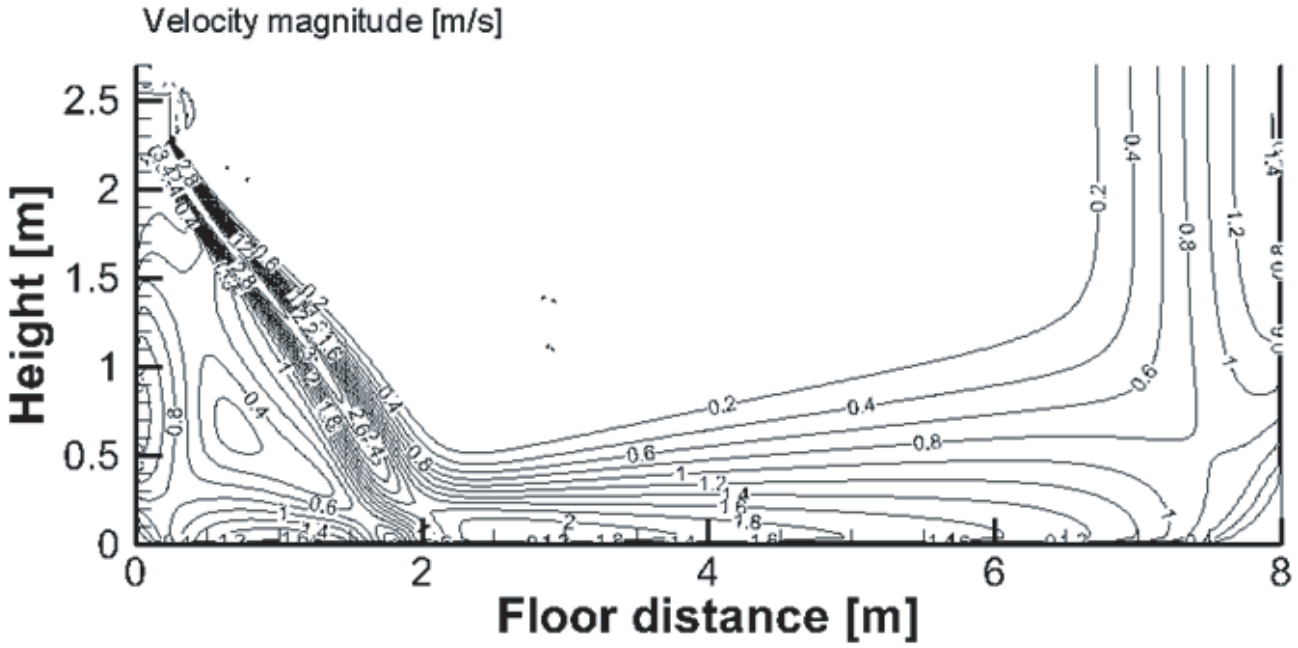

Heating temperature distributions

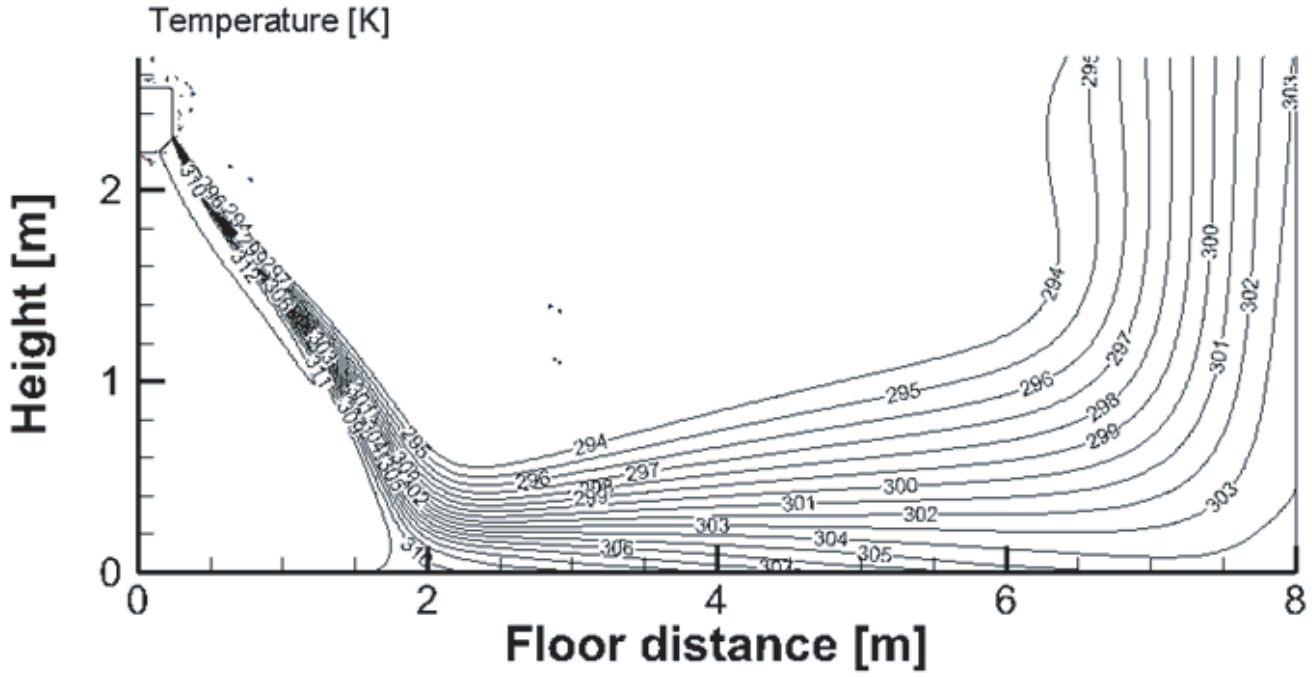

7. Electrical Wiring Diagrams

7.1 Indoor unit

A6 Duct Type

MTIU-07HWFNX-QRD0W, MTIU-09HWFNX-QRD0W

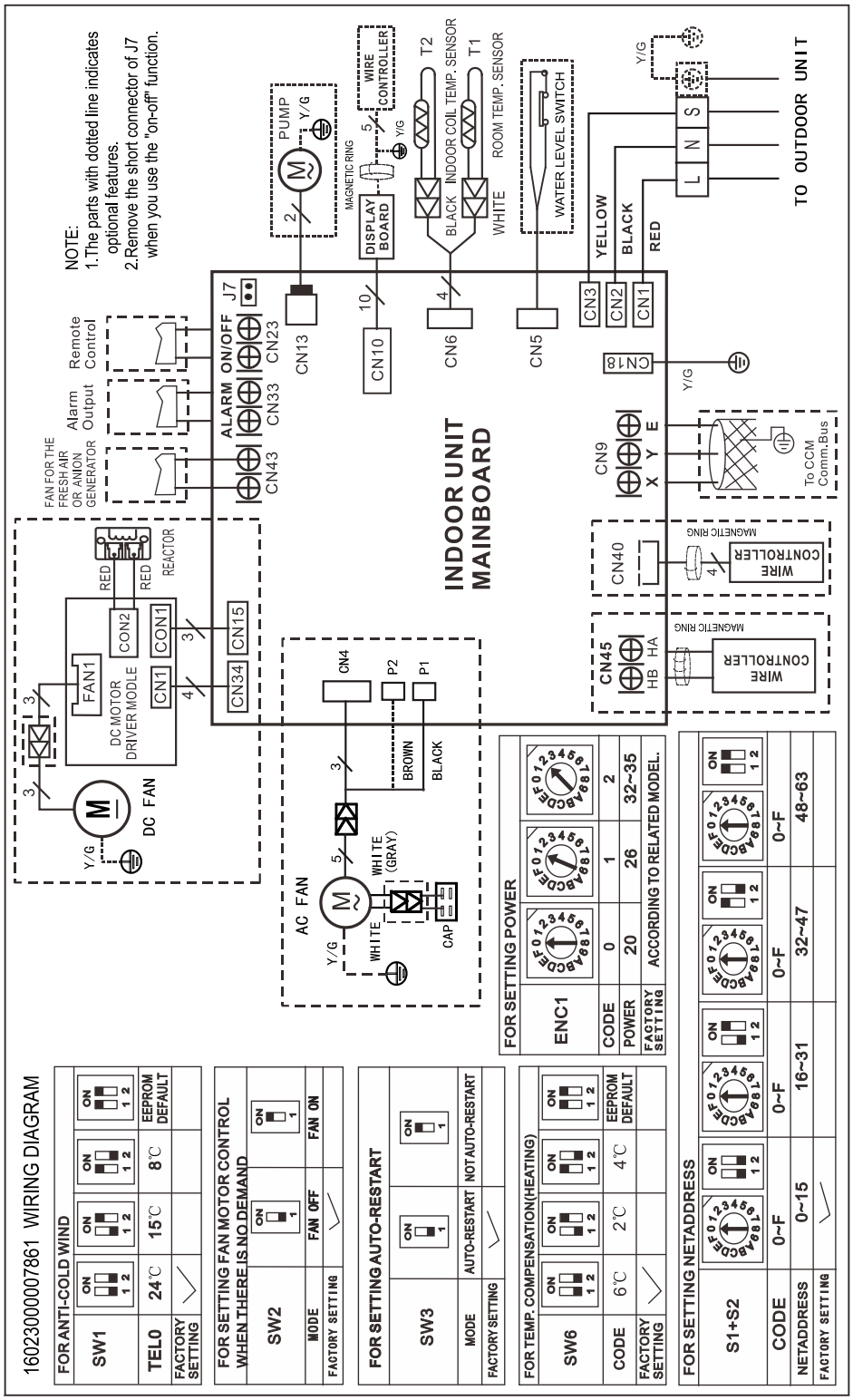

MTIU-12HWFNX-QRD0W

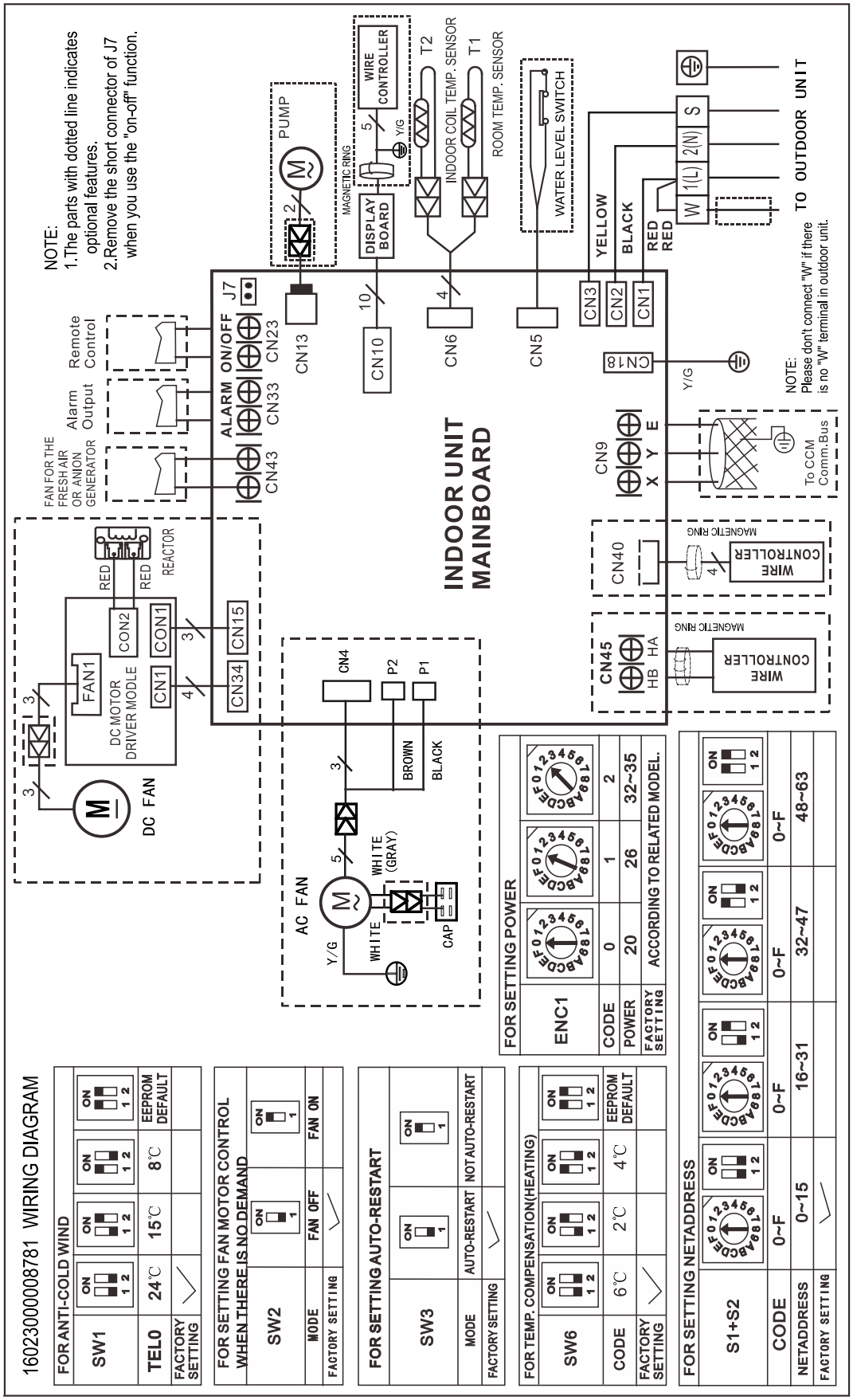

MTIU-07HWFNX-QRD0W(GA), MTIU-09HWFNX-QRD0W(GA), MTIU-18HWFNX-QRD0W, MTIU-12HWFNX-QRD0W(GA)

MTIU-18HWFNX-QRD0W(GA)

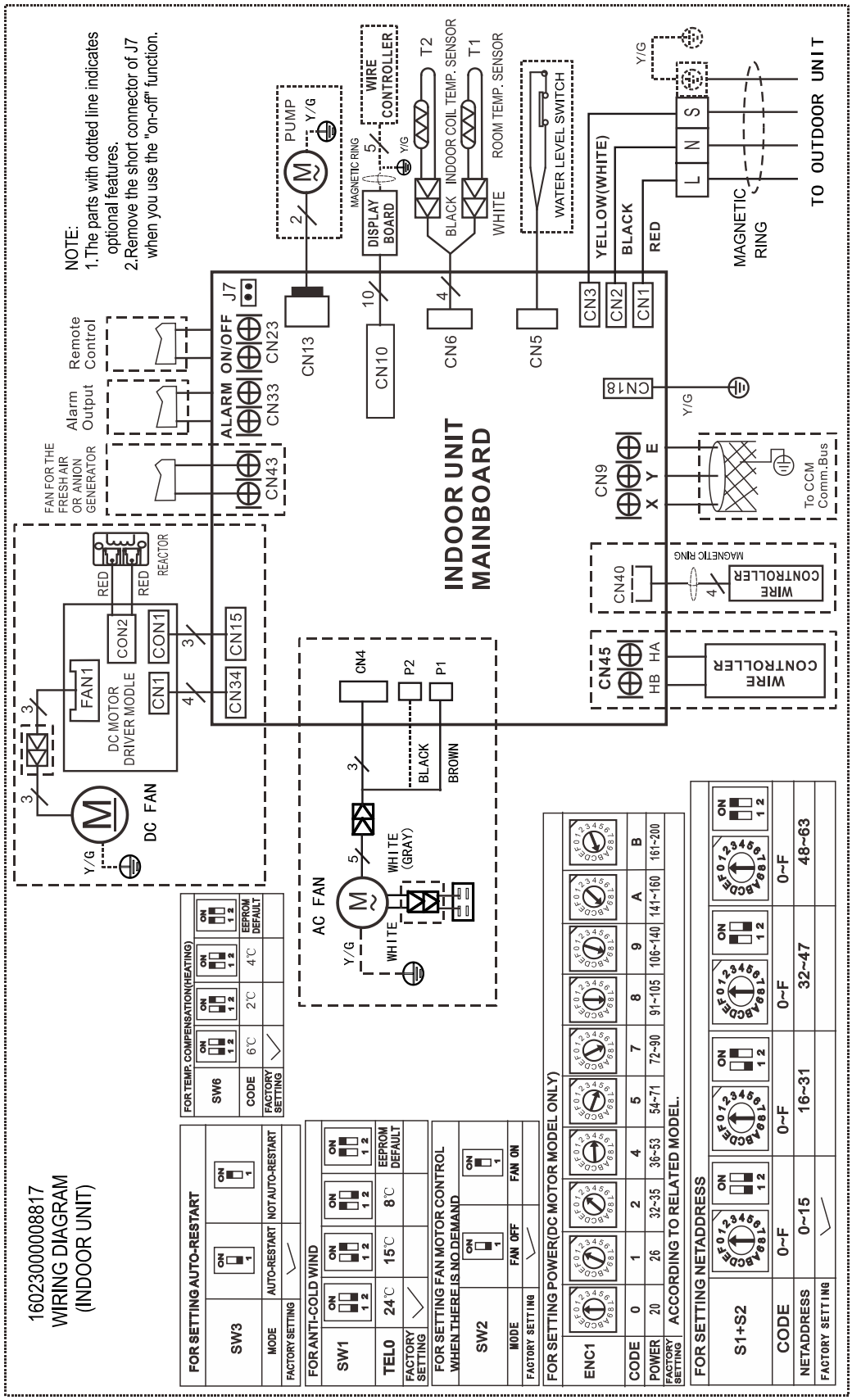

Compact Cassette Type:

MCA3I-07HRFNX-QRD0, MCA3I-09HRFN8-QRD0

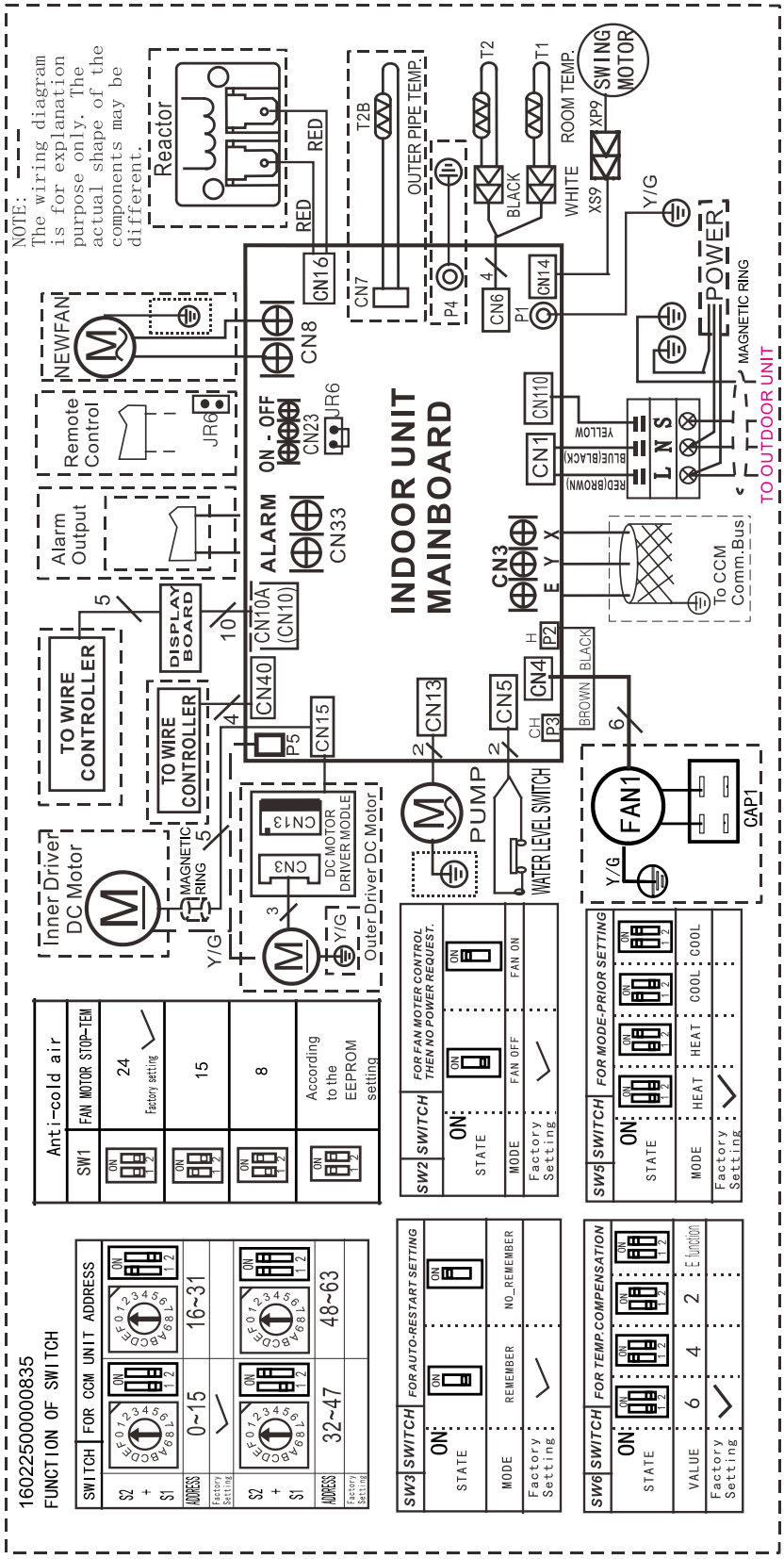

MCA3U-12HRFNX-QRD0W

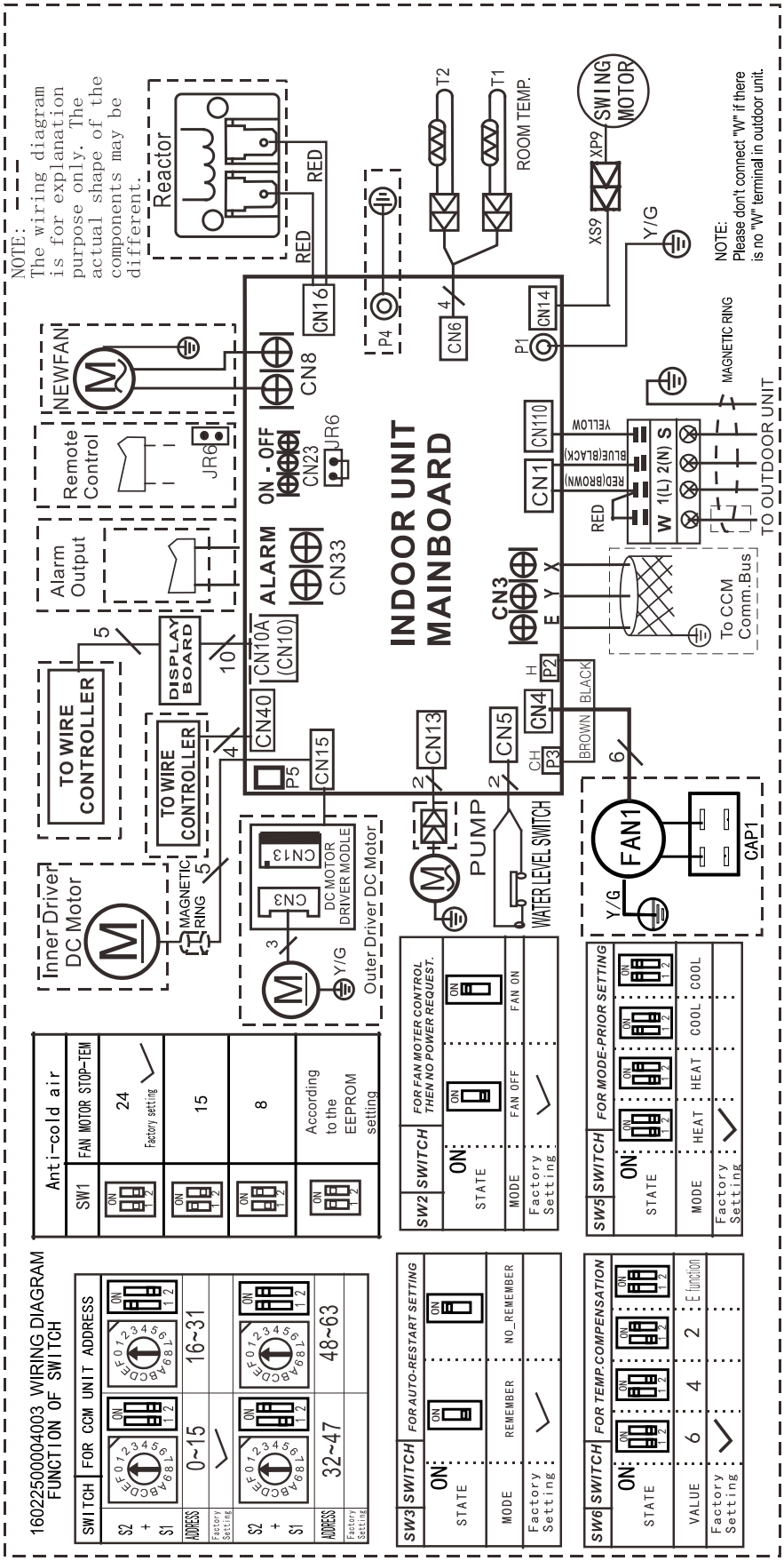

MCA3U-07HRFNX-QRD0W(GA), MCA3U-09HRFNX-QRD0W(GA), MCA3U-18HRFNX-QRD0W, MCA3U-12HRFNX-QRD0W(GA), MCA3U-18HRFNX-QRD0W(GA)

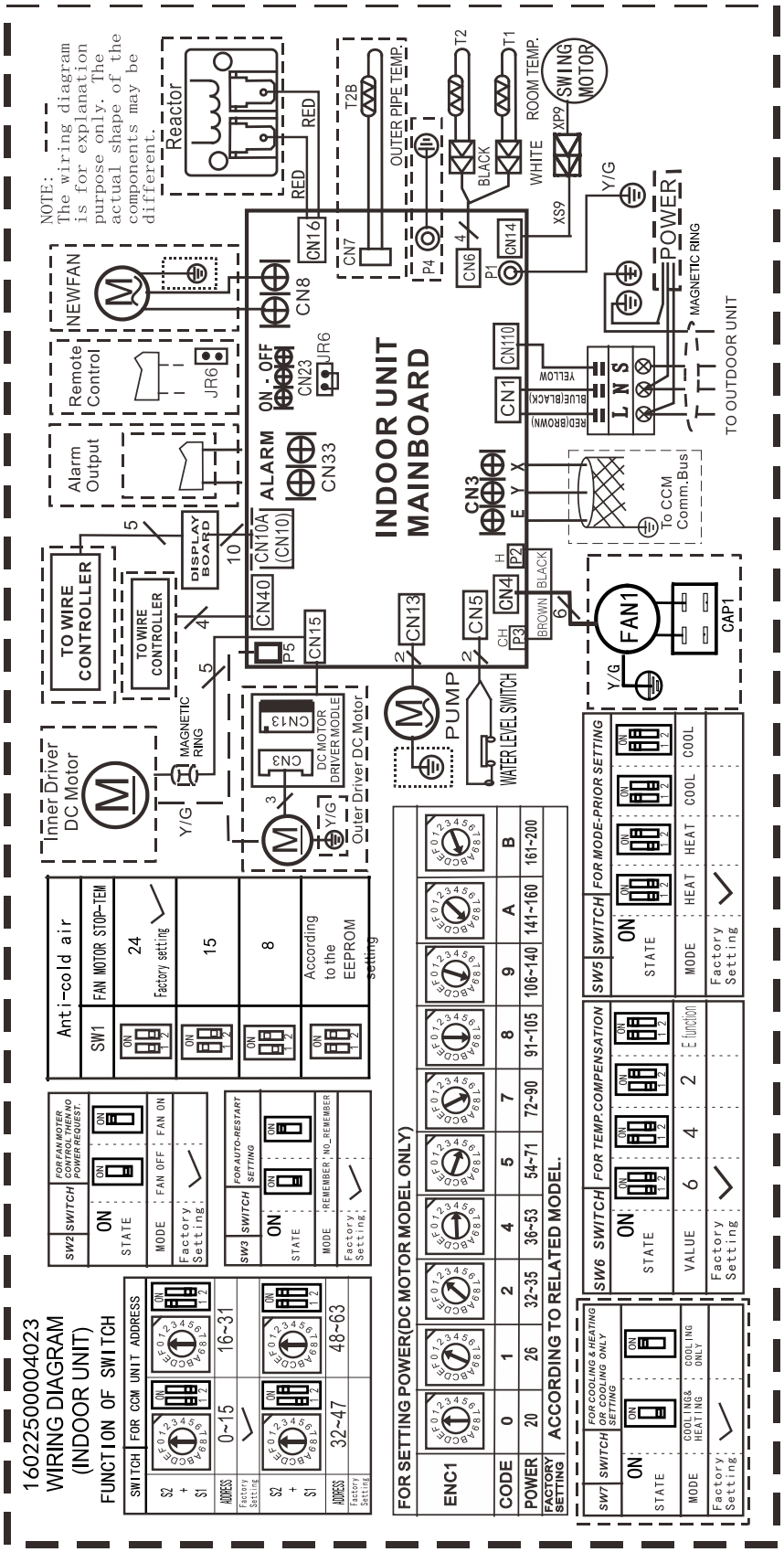

New 4-way Cassette Type:

MCD1-24HRFNX-QRD0W(GA)

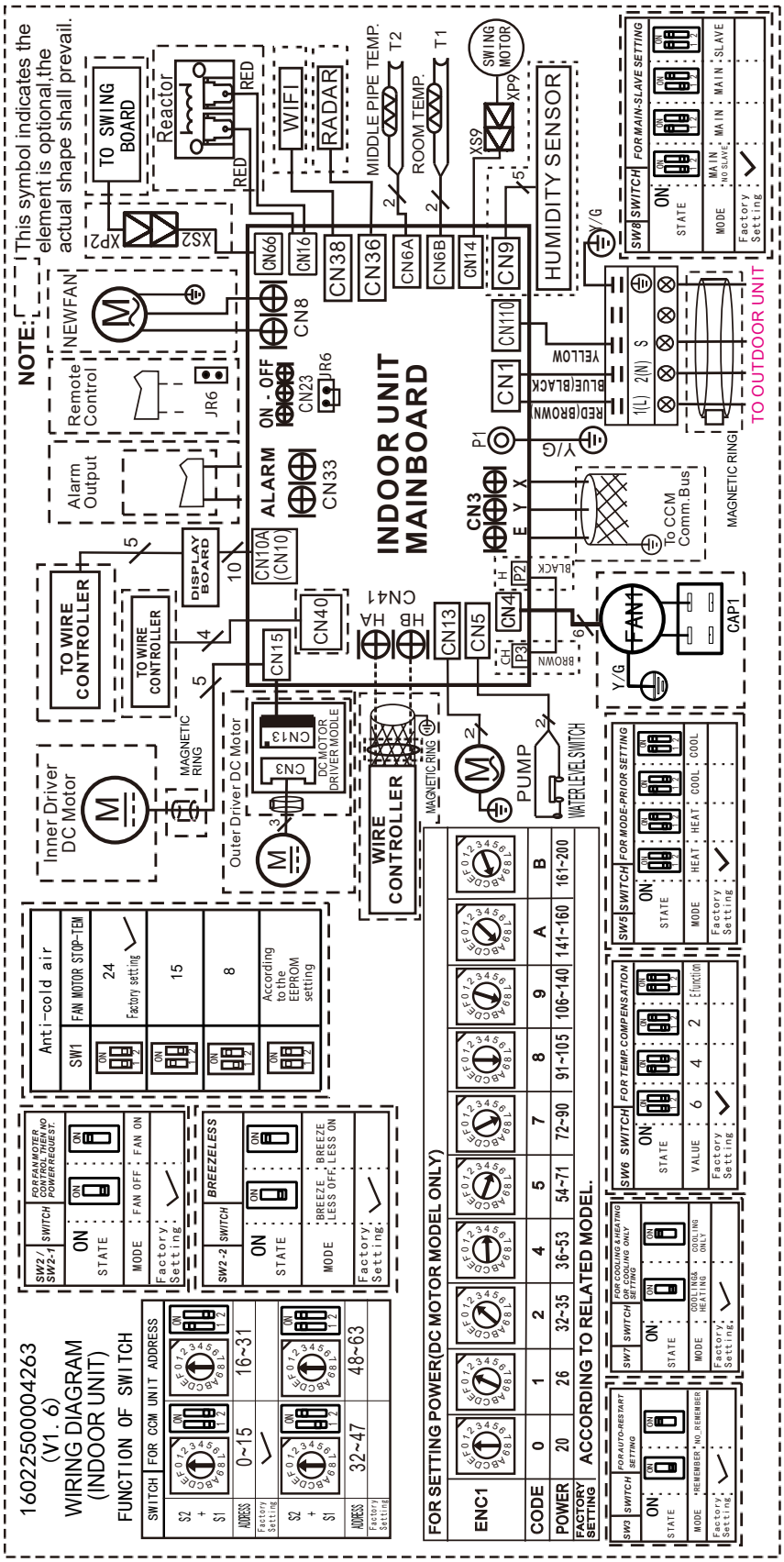

Console Type:

MFA2U-09HRFNX-QRD0W(GA), MFA2U-12HRFNX-QRD0W(GA), MFA2U-17HRFNX-QRD0W(GA)

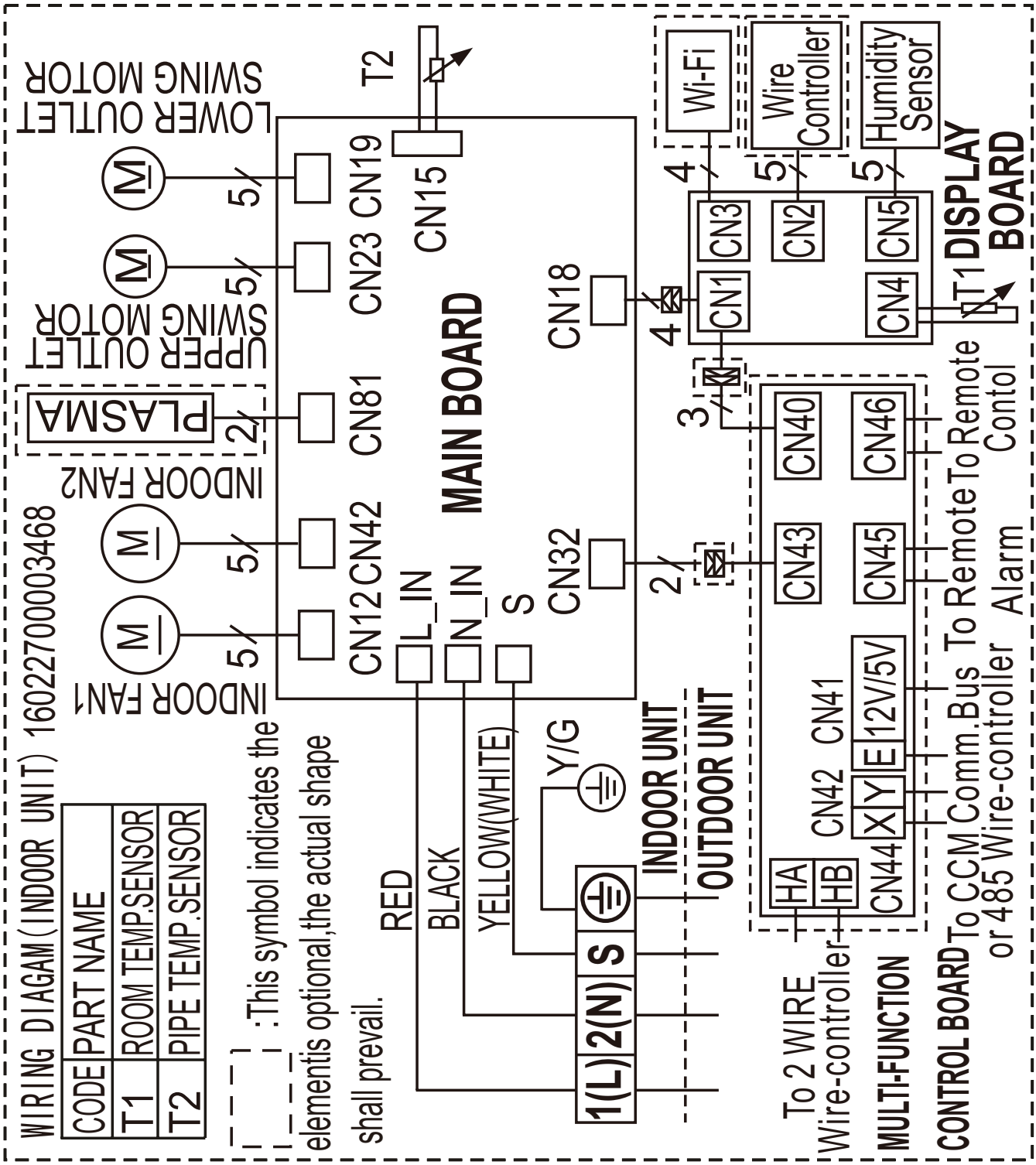

New Compact Cassette Type:

MCA4U-07HRFNX-QRD1W(GA), MCA4U-09HRFNX-QRD1W(GA), MCA4U-12HRFNX-QRD1W(GA)

MCA4U-18HRFNX-QRD1W(GA)

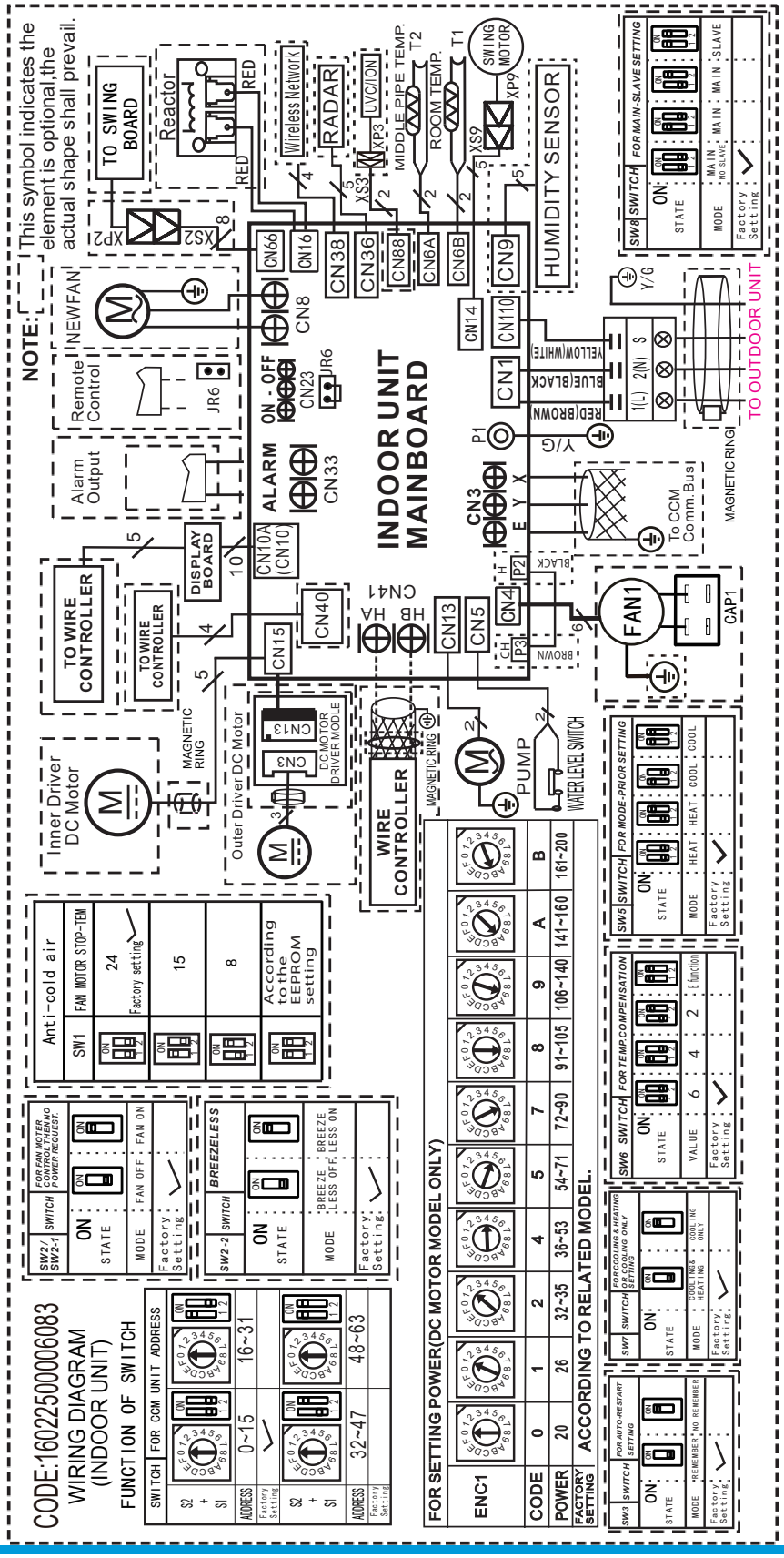

A7 Duct Type:

MTJ-07HWFNX-QRD1W(GA), MTJ-09HWFNX-QRD1W(GA), MTJ-12HWFNX-QRD1W(GA), MTJ-18HWFNX-QRD1W(GA)

MTJ-24HWFNX-QRD1W(GA)

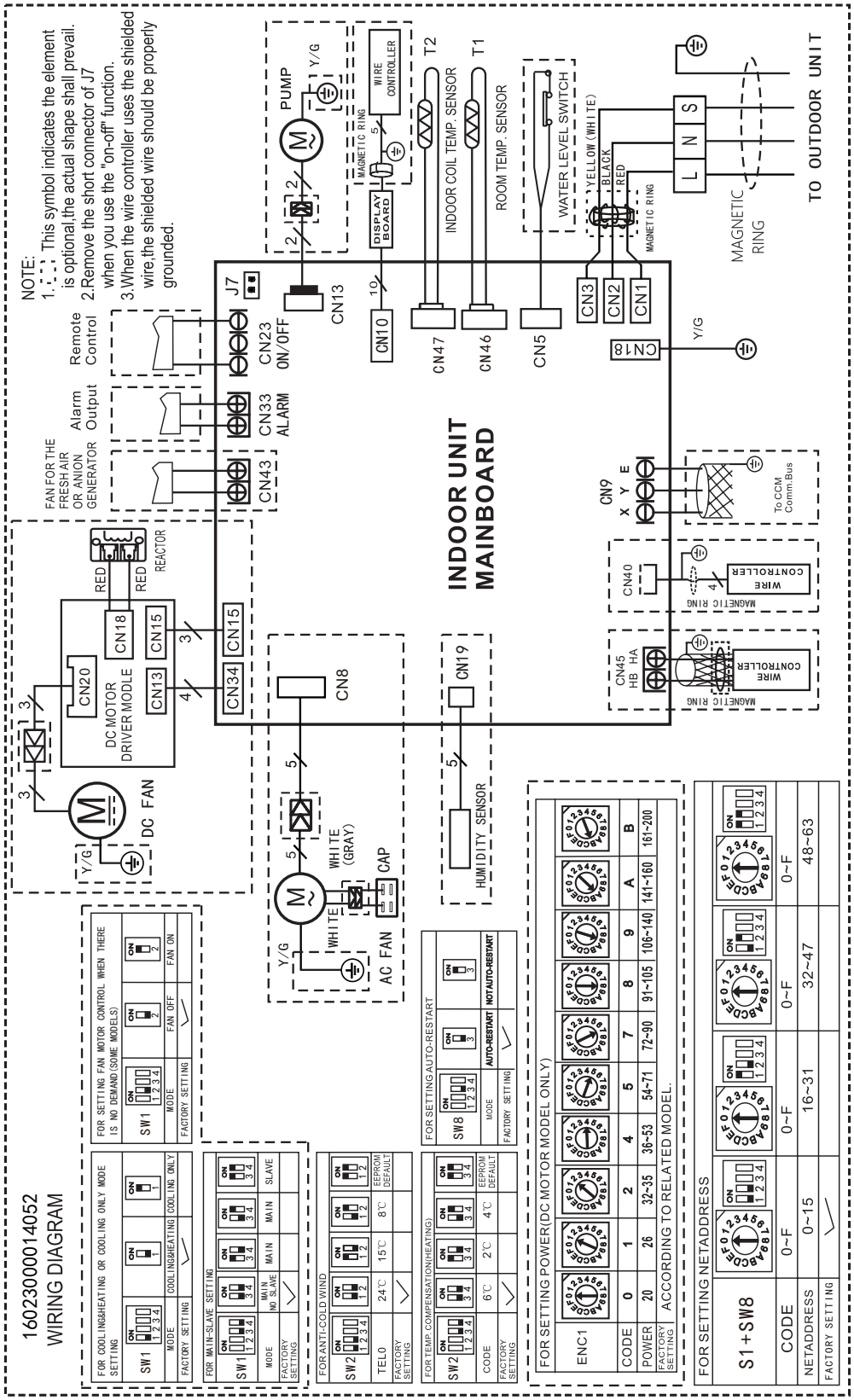

Wall mounted Type

MSAFBU-07HRDNX-QRD0GW, MSAFBU-09HRDN8-QRD0GW, MSAFBU-12HRDN8-QRD0GW,
MSAFCU-18HRFN8-QRD0GW, MSAFDU-24HRFNX-QRD0GW, MSAEBU-09HRFN8-QRD6GW
MSAEBU-12HRFN8-QRD0GW, MSAECU-18HRFN8-QRD0GW, MSAEDU-24HRFN8-QRD0GW
MSAGAU-09HRFNX-QRD0GW, MSAGBU-09HRFN8-QRD1GW(GA), MSAGBU-12HRFN8-QRD1GW(GA),
MSAGBU-12HRFNX-QRD0GW, MSAGCU-18HRFNX-QRD0GW

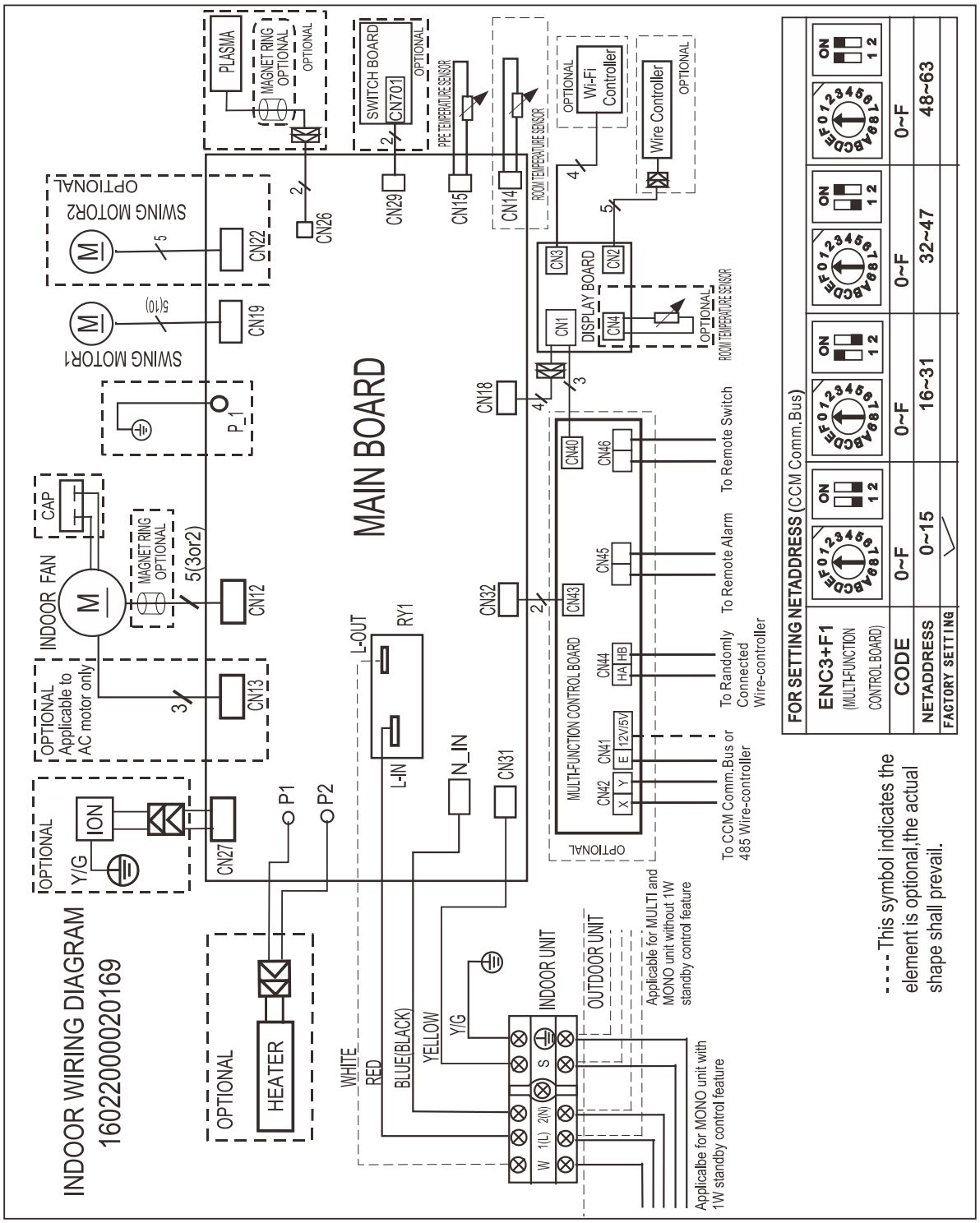

MSABAU-09HRFN8-QRD0GW, MSABBU-12HRFN8-QRD0GW, MSABDU-18HRFN8-QRD0GW, MSABEU-24HRFN8-QRD0GW, MSAGDU-24HRFN8-QRD0GW

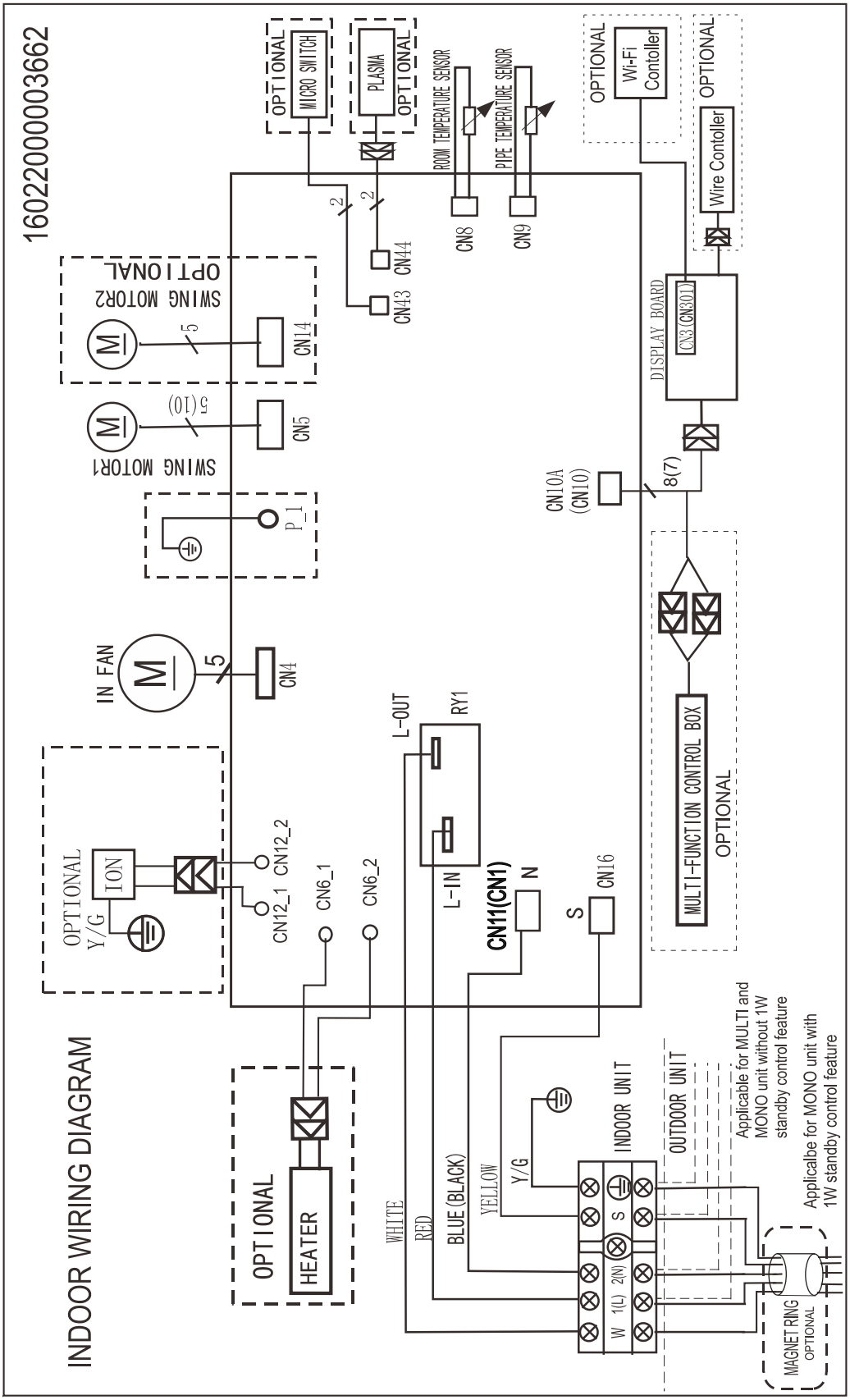

MSFAAU-09HRFN8-QRD6GW, MSFAAU-12HRFN8-QRD6GW, MSAFAU-09HRFN8-QRD1GW, MSAFBU-12HRFN8-QRD1GW

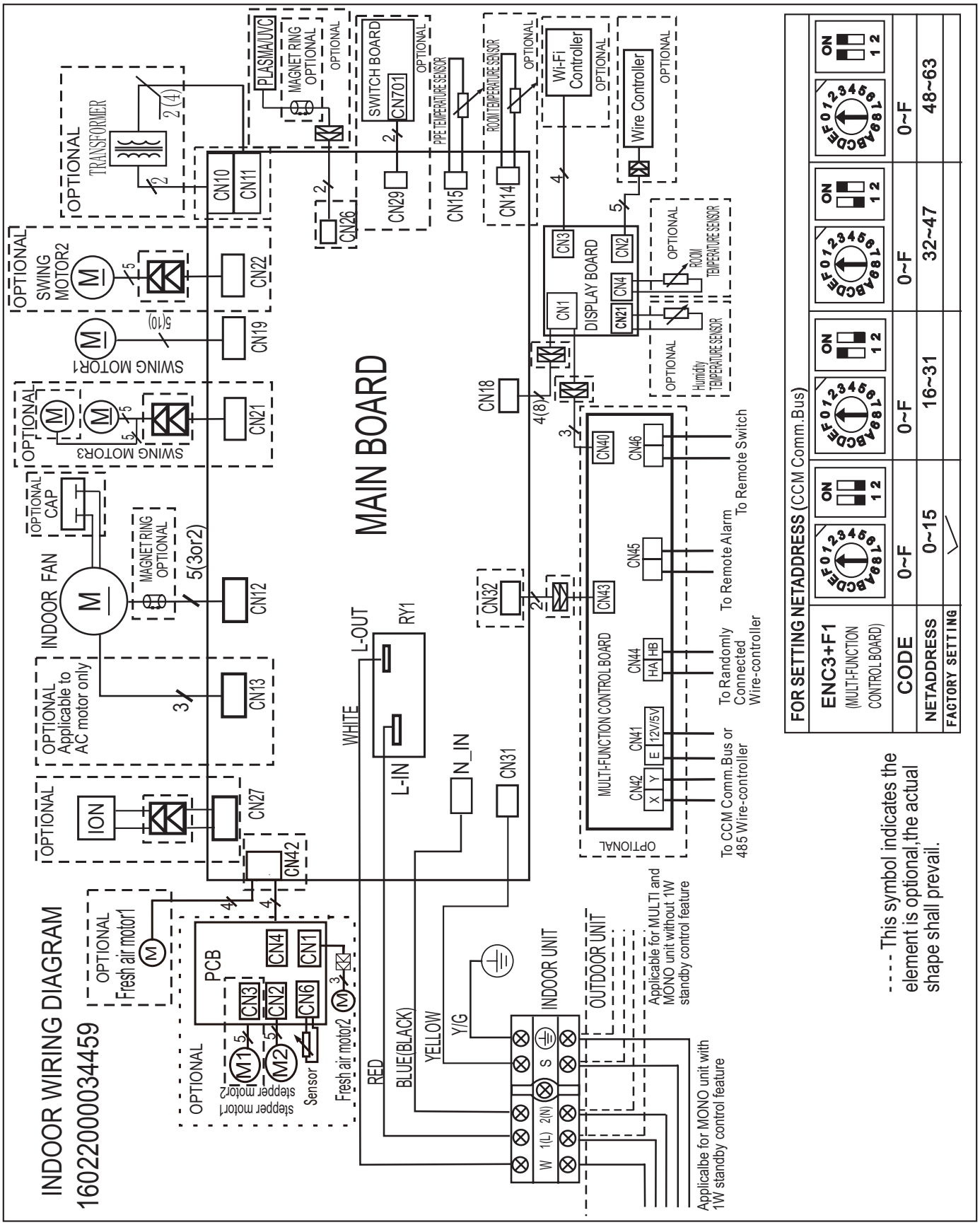

MSGPAU-09HRFN8-QRD6GW, MSGPBU-12HRFN8-QRD6GW, MSGPCU-18HRFN8-QRD6GW
MSGPDU-24HRFN8-QRD6GW, MSGPAU-07HRFN8-QRD1GW, MSGPAU-09HRFN8-QRD1GW
MSGPBU-12HRFN8-QRD1GW, MSGPCU-18HRFN8-QRD1GW, MSGPDU-24HRFN8-QRD1GW

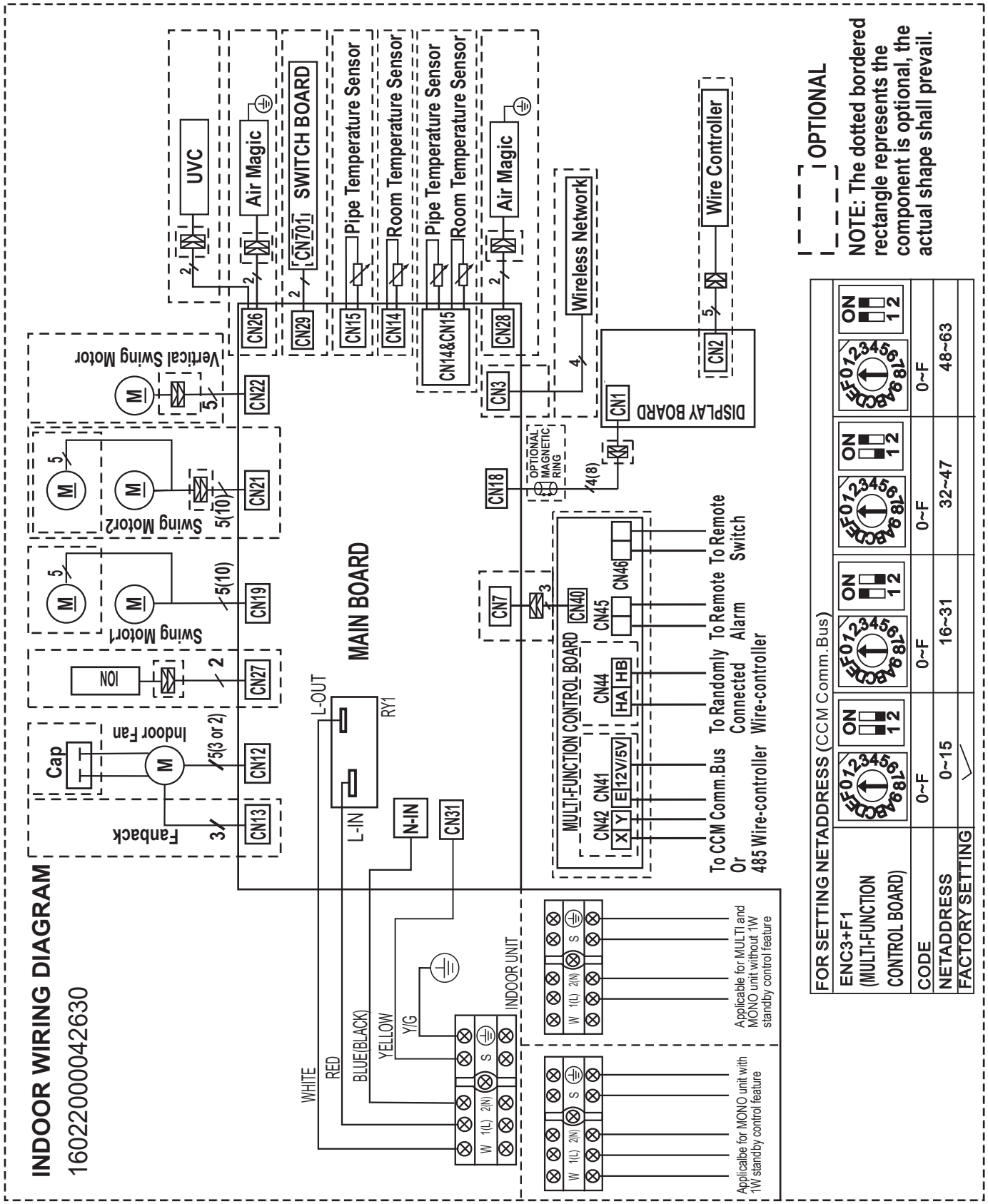

MSCB1BU -09HRFN8-QRD1GW, MSCB1BU -12HRFN8-QRD1GW, MSCB1CU-18HRFN8-QRD1GW

MSCB1DU-24HRFN8-QRD1GW

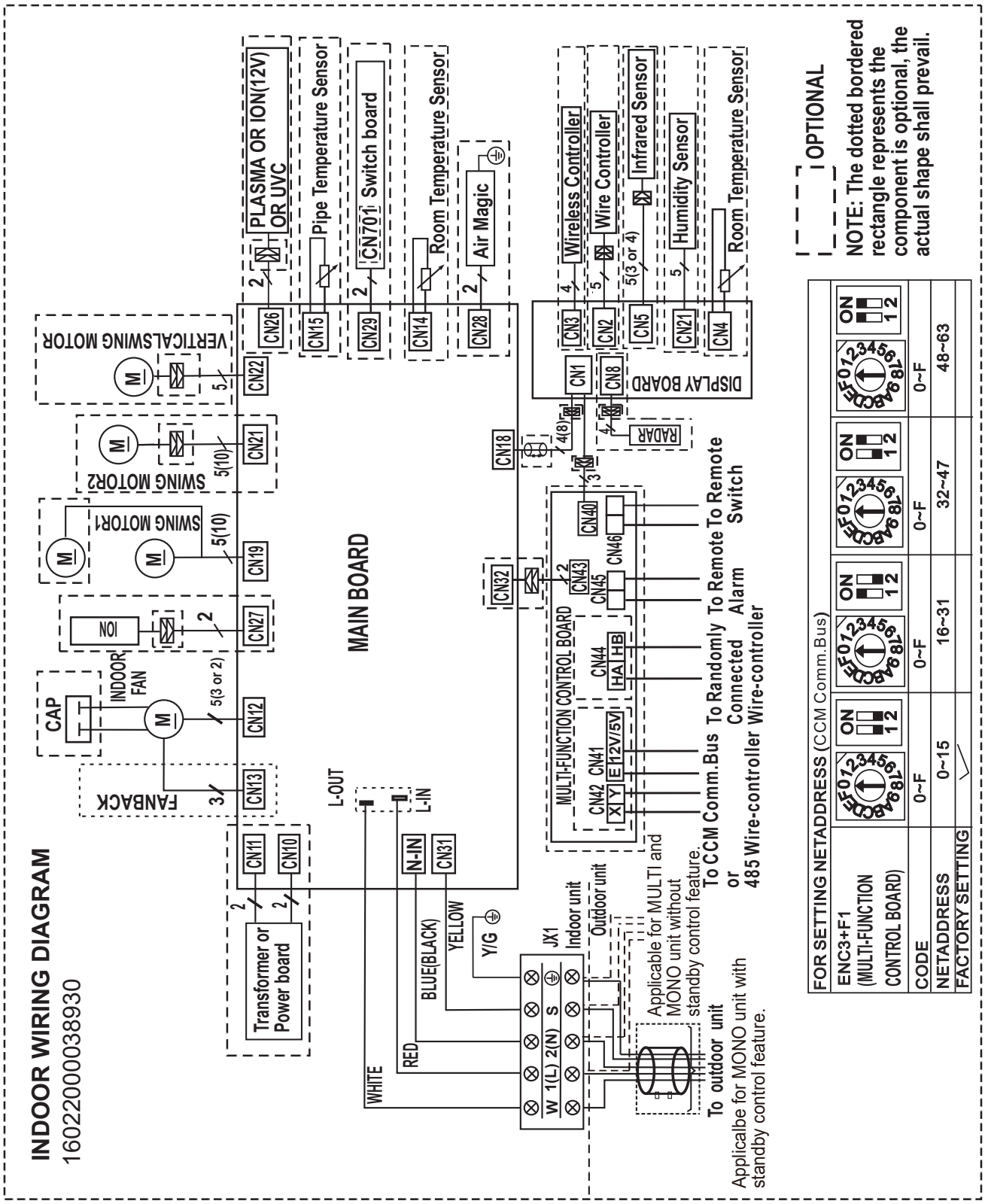

7.2 Outdoor Unit

M2OG-14HFN8-Q

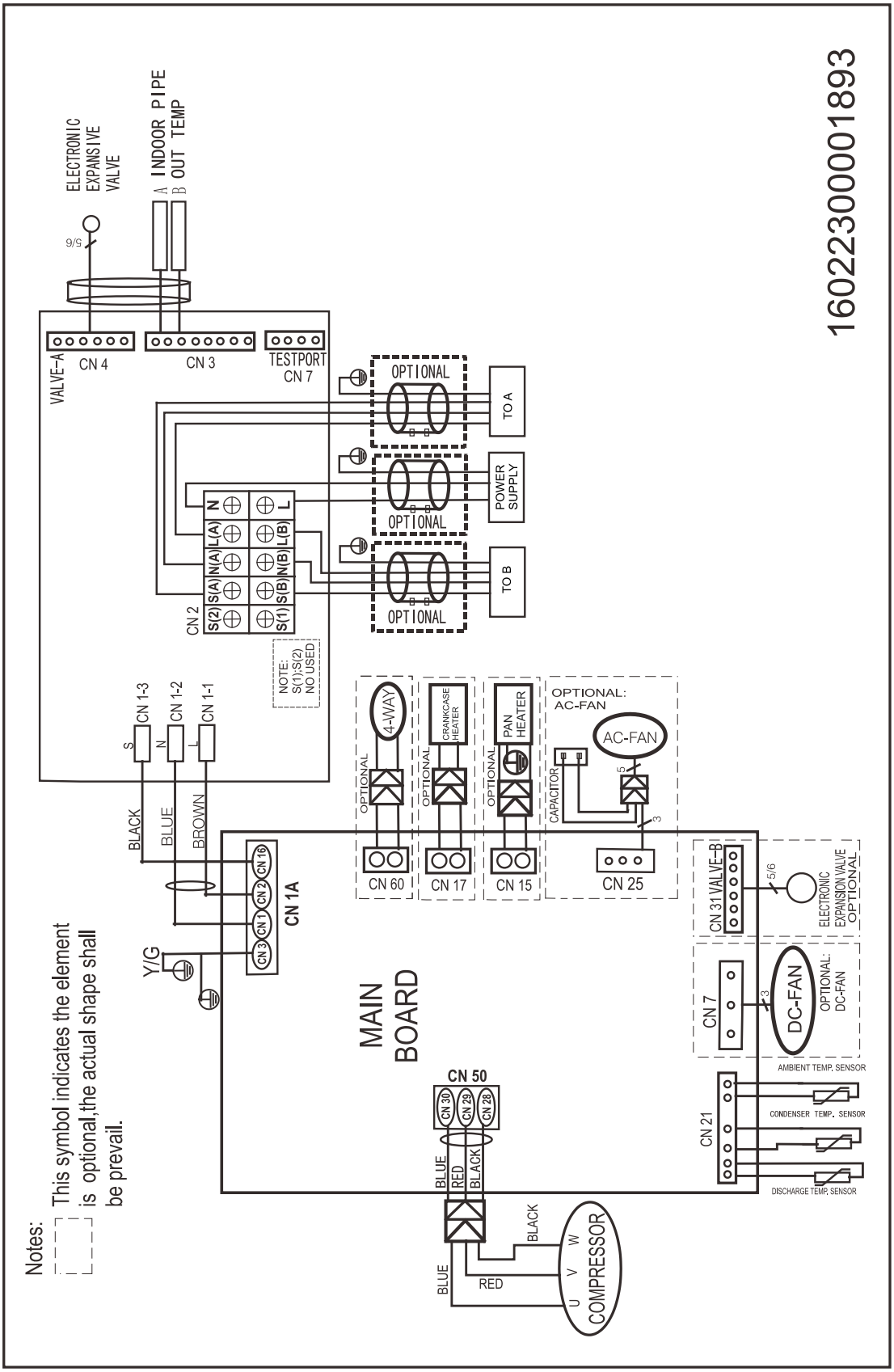

M2OC-18HFN8-Q

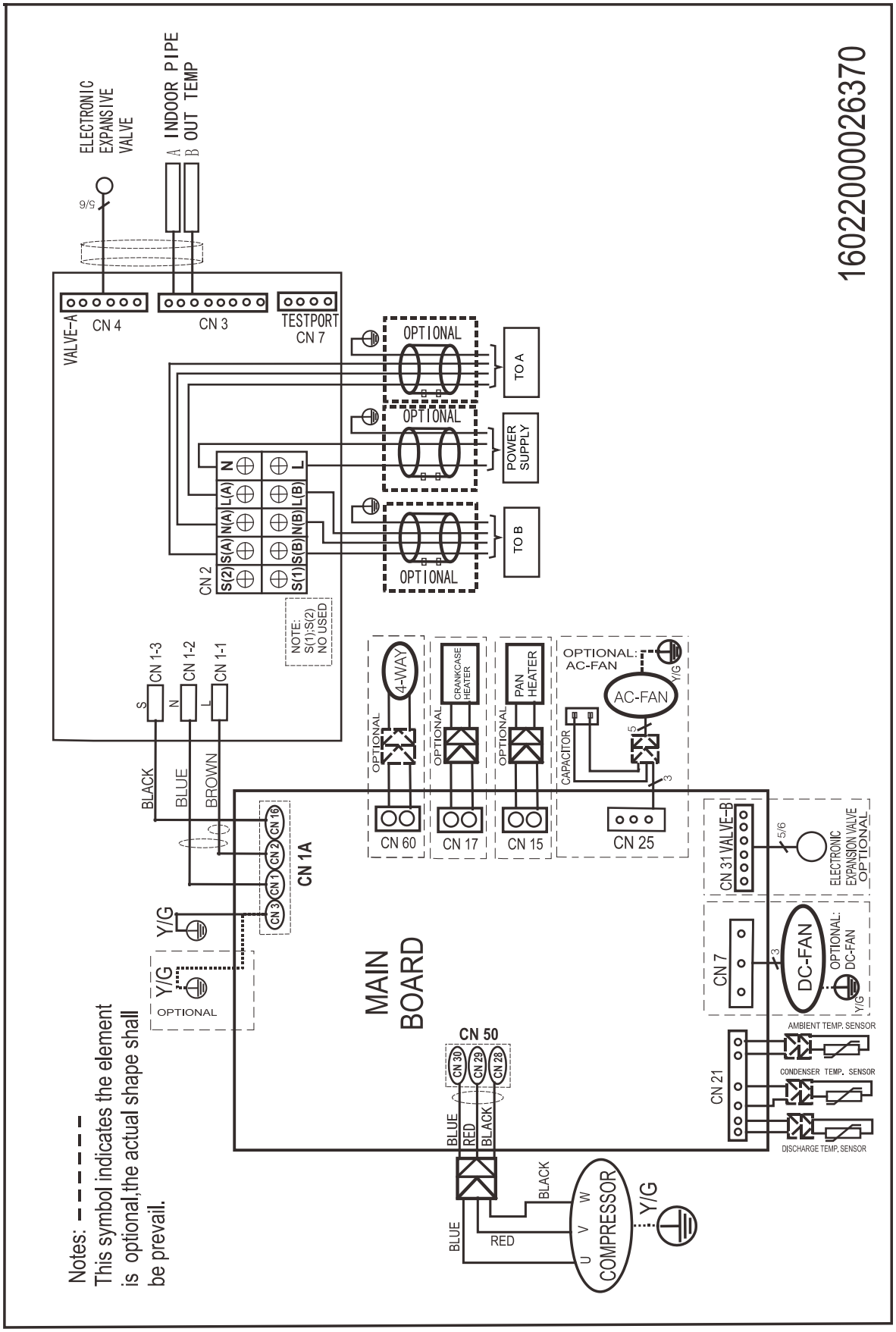

Specifications

M2OD-18HFN8-Q

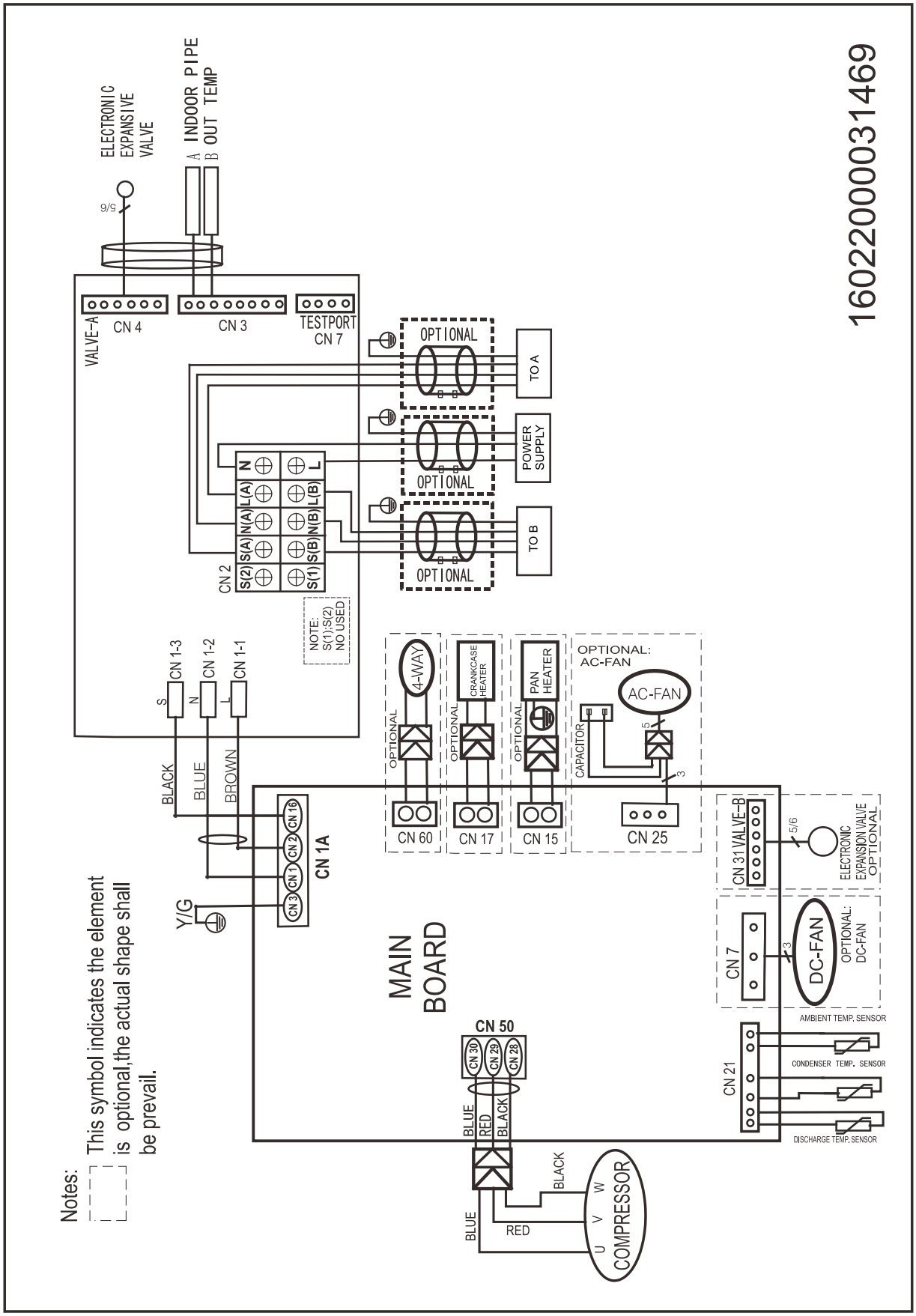

M3OE-27HFN8-Q

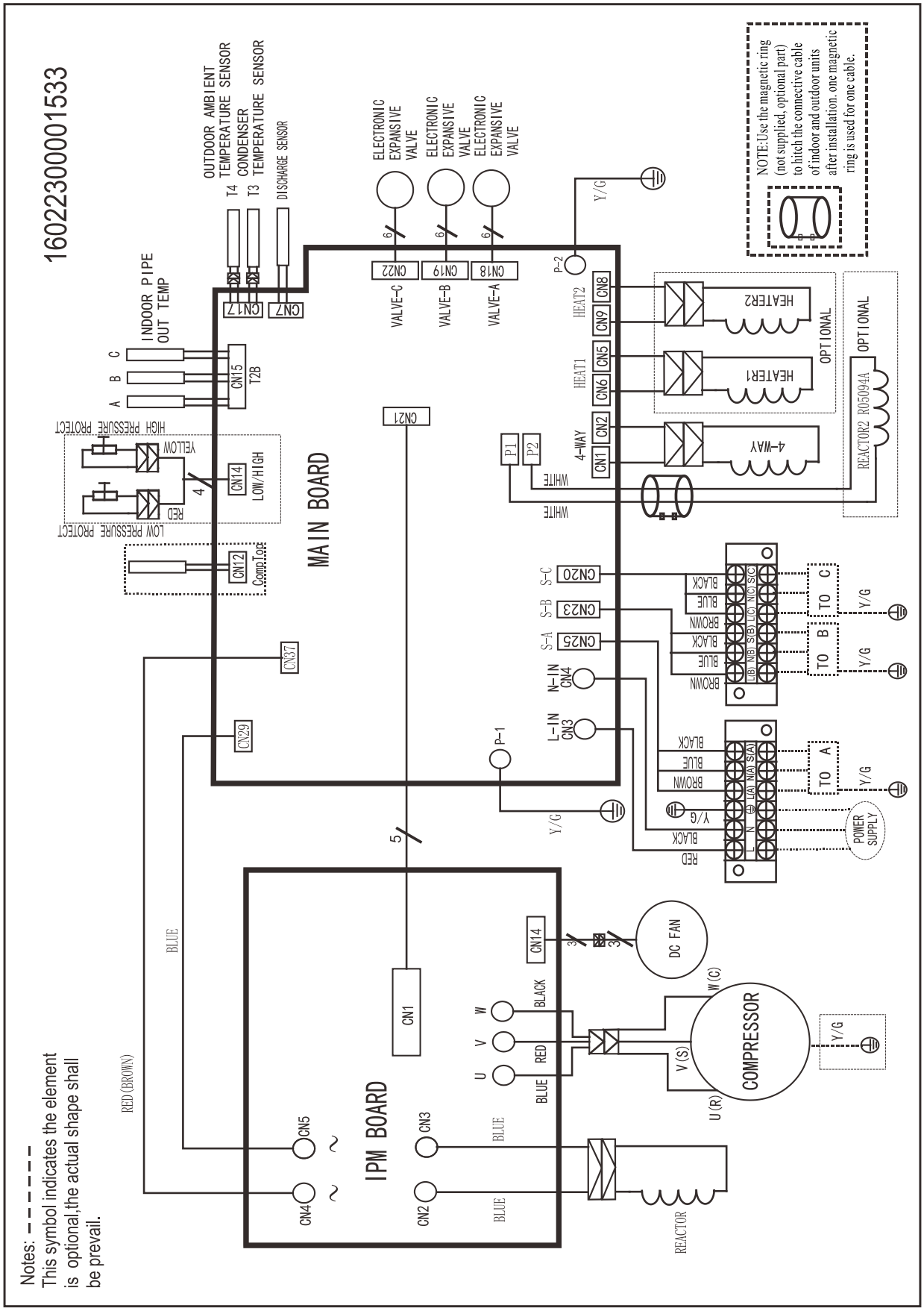

Specifications

M3OF-21HFN8-Q, M3OF-27HFN8-Q

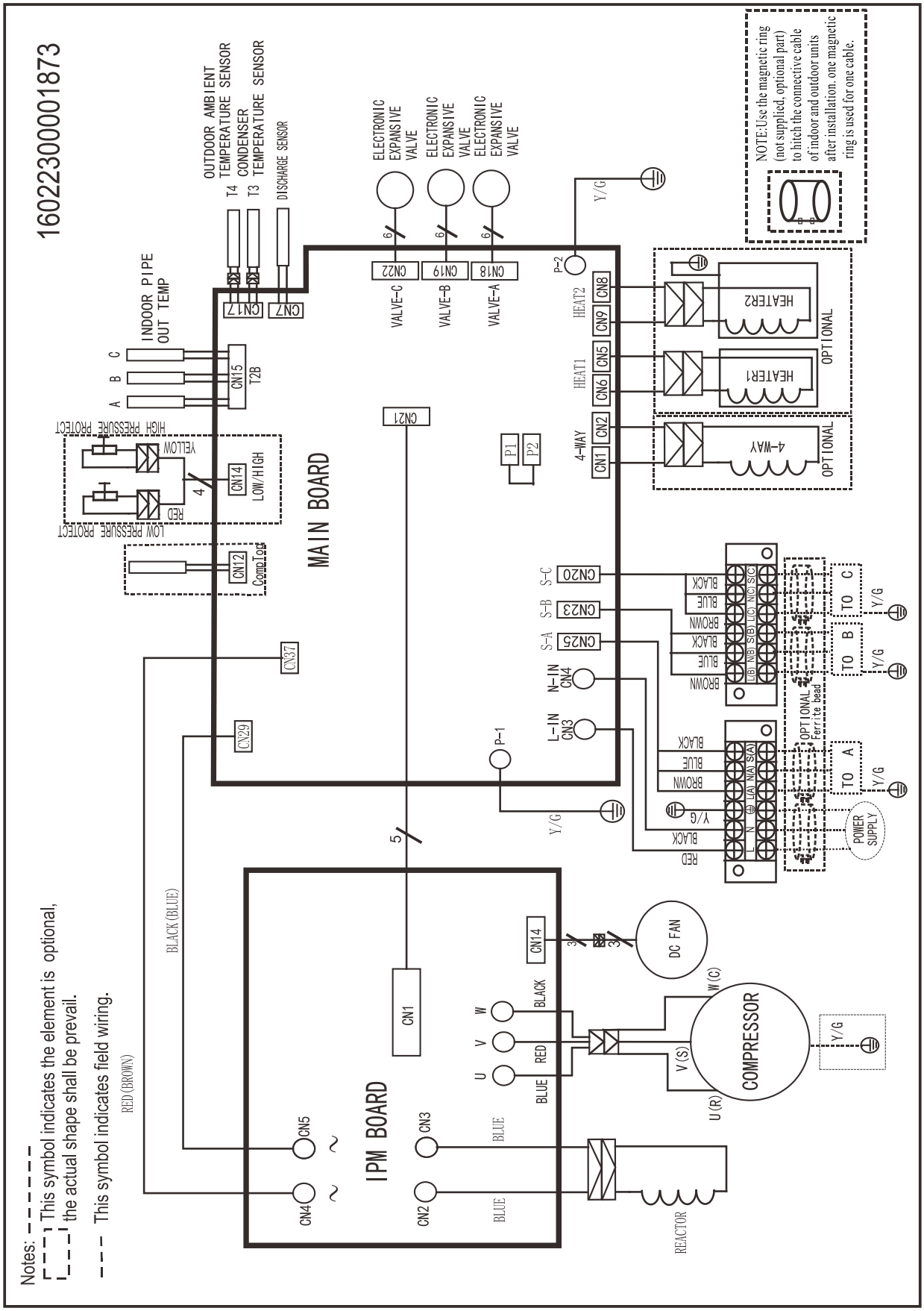

M4OE-28HFN8-Q

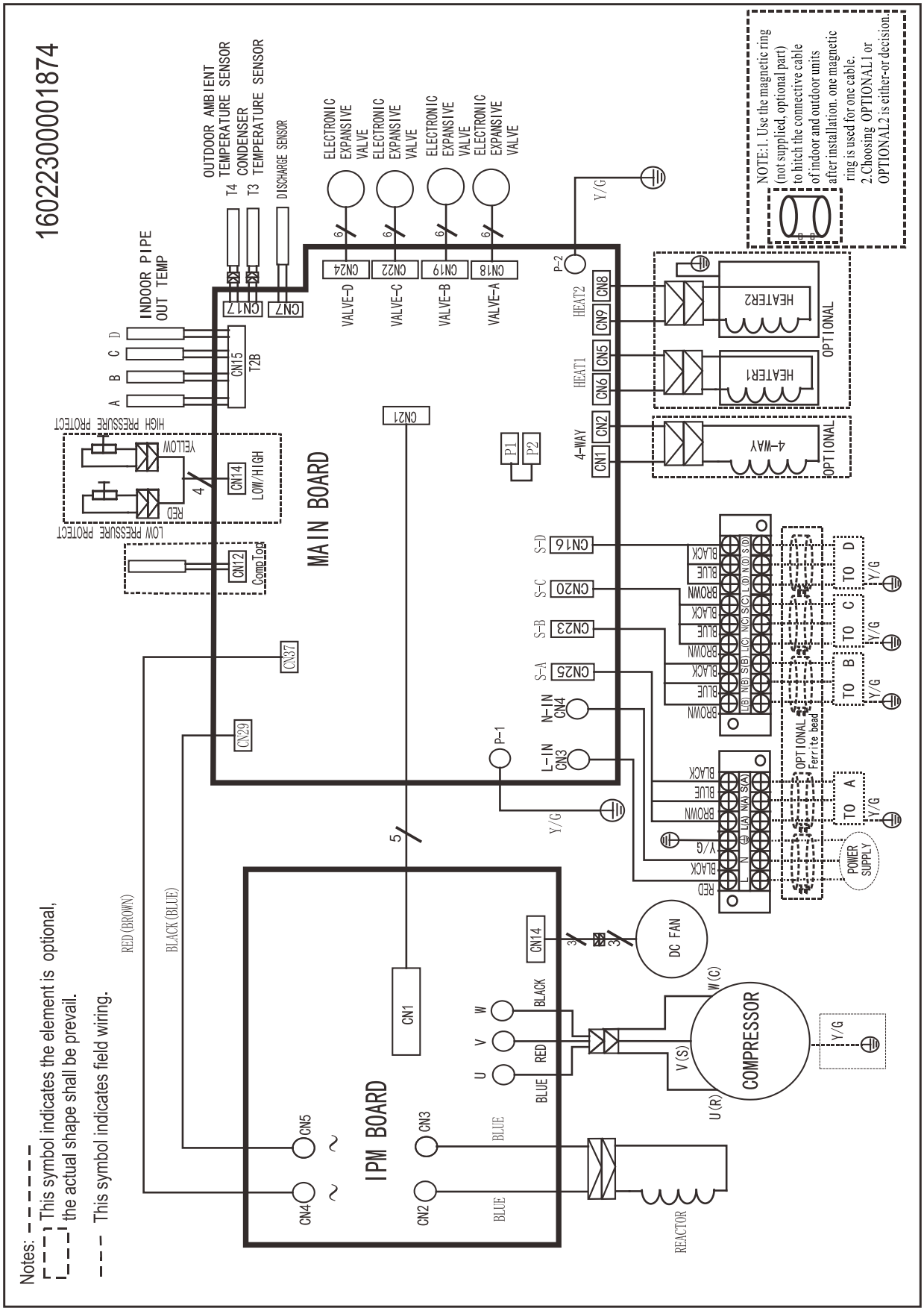

M4OB-36HFN8-Q

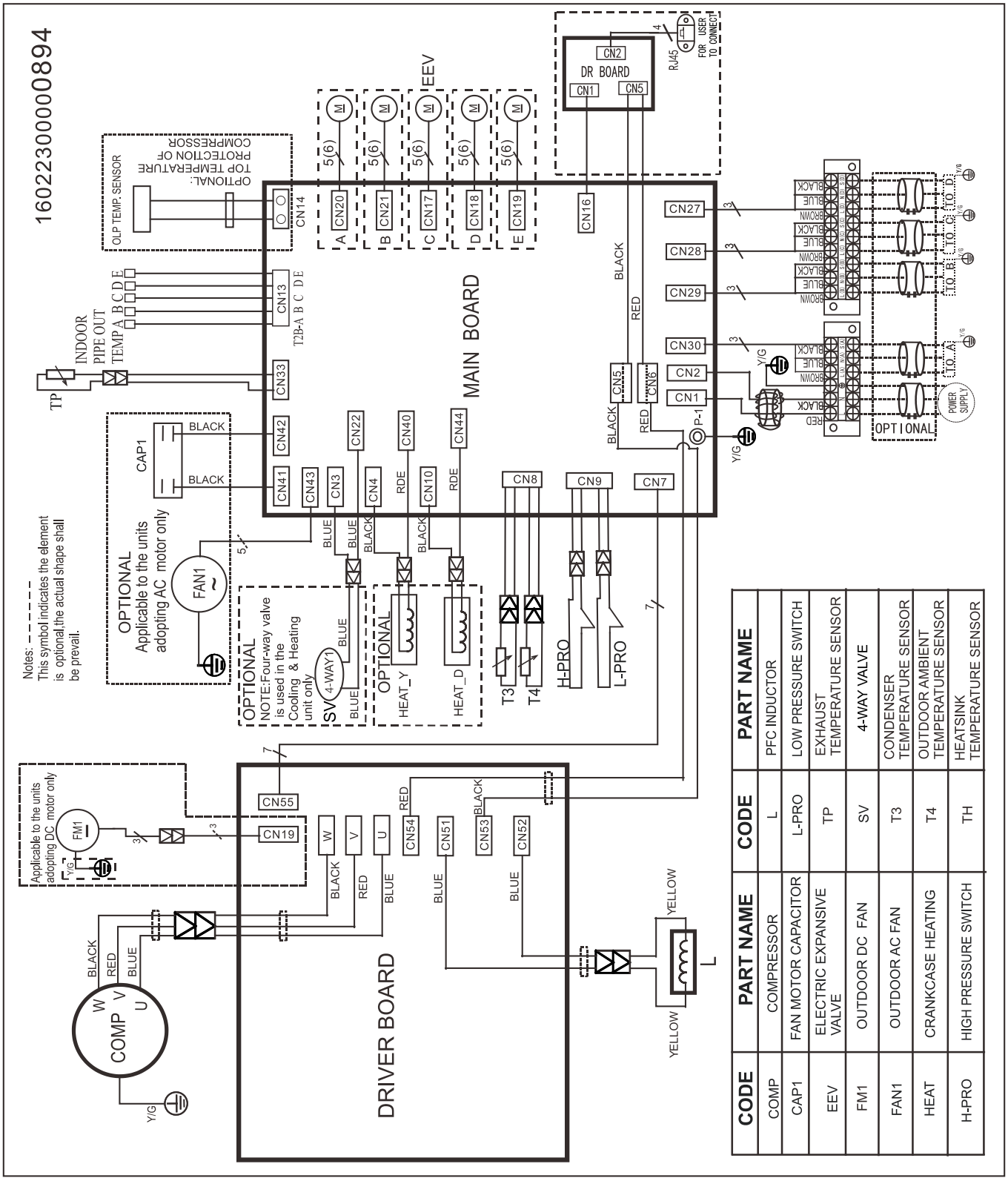

CODE	PART NAME	CODE	PART NAME
COMP	COMPRESSOR	L	PFC INDUCTOR
CAP1	FAN MOTOR CAPACITOR	L-PRO	LOW PRESSURE SWITCH
EEV	ELECTRIC EXPANSIVE VALVE	TP	EXHAUST TEMPERATURE SENSOR
FM1	OUTDOOR DC FAN	SV	4-WAY VALVE
FAN1	OUTDOOR AC FAN	T3	CONDENSER TEMPERATURE SENSOR
HEAT	CRANKCASE HEATING	T4	OUTDOOR AMBIENT TEMPERATURE SENSOR
H-PRO	HIGH PRESSURE SWITCH	TH	HEATSINK TEMPERATURE SENSOR

M5OD-42HFN8-Q, M5OE-42HFN8-Q

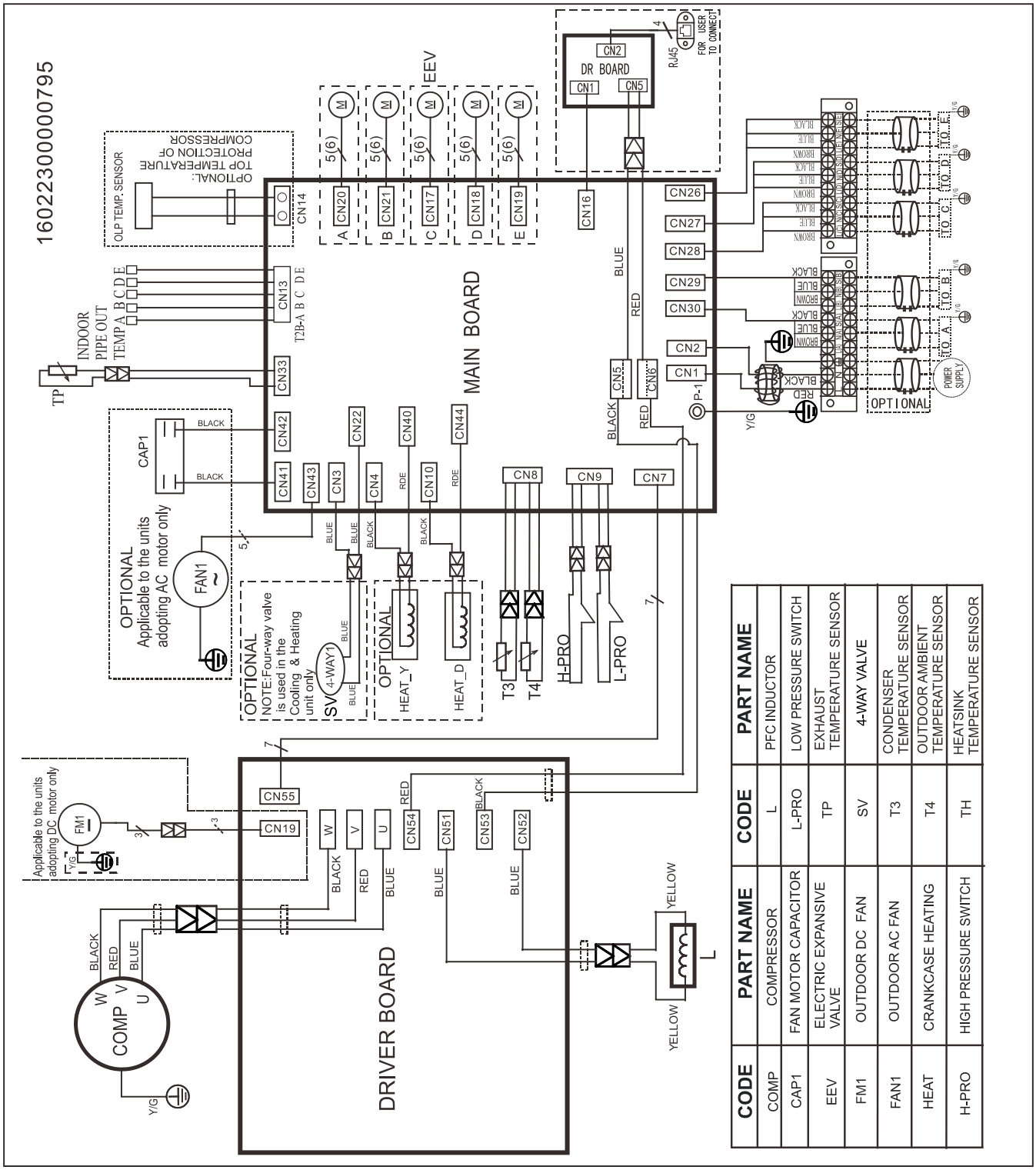

CODE	PART NAME
COMP	COMPRESSOR
CAP1	FAN MOTOR CAPACITOR
EEV	ELECTRIC EXPANSIVE VALVE
FM1	OUTDOOR DC FAN
FAN1	OUTDOOR AC FAN
HEAT	CRANKCASE HEATING
H-PRO	HIGH PRESSURE SWITCH

CODE	PART NAME
L	PFC INDUCTOR
L-PRO	LOW PRESSURE SWITCH
TP	EXHAUST TEMPERATURE SENSOR
SV	4-WAY VALVE
T3	CONDENSER TEMPERATURE SENSOR
T4	OUTDOOR AMBIENT TEMPERATURE SENSOR
TH	HEATSINK TEMPERATURE SENSOR

M2OH-14HFN8-Q, M2OE-18HFN8-Q

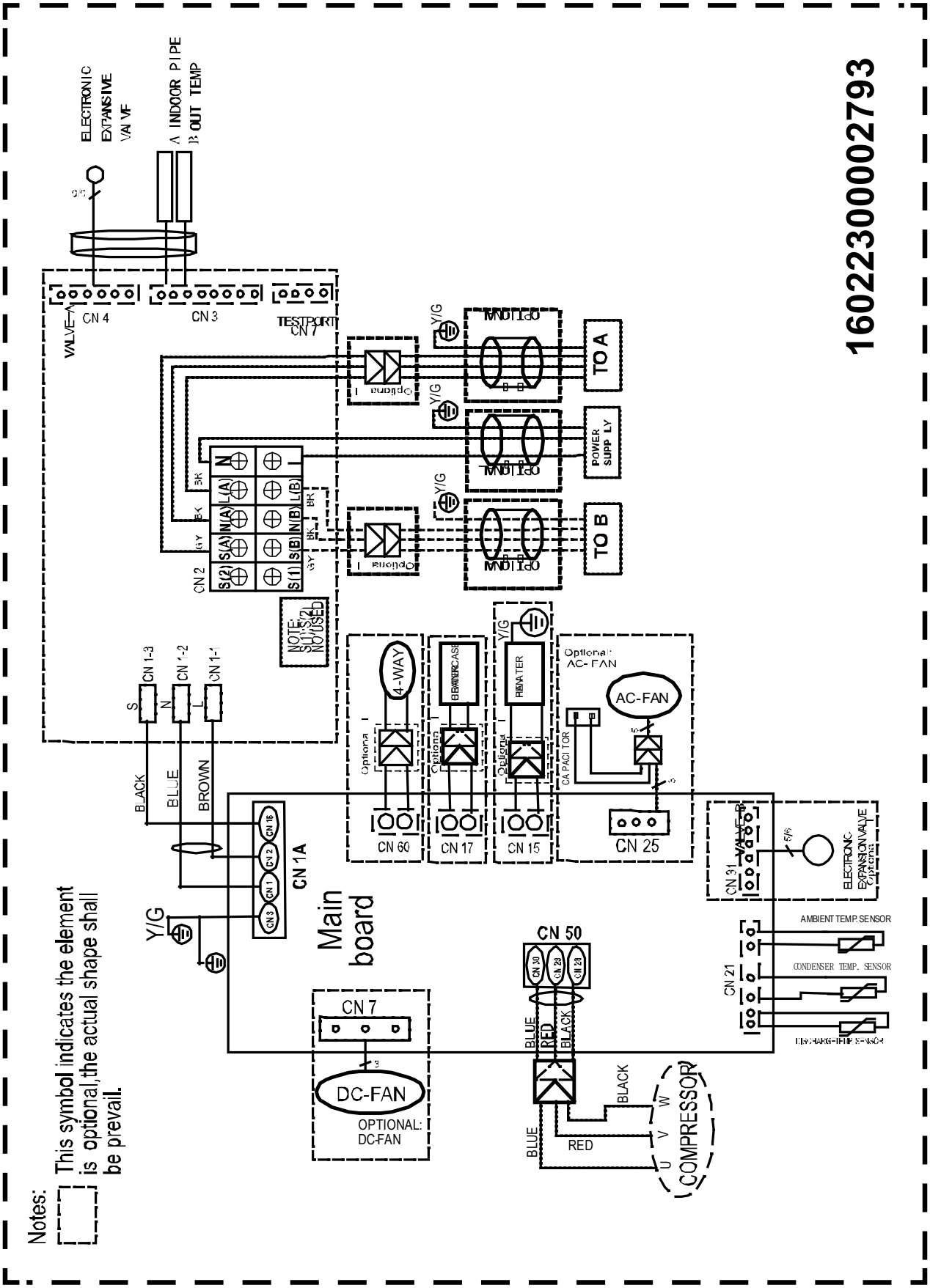

M3OA-18HFN8-Q

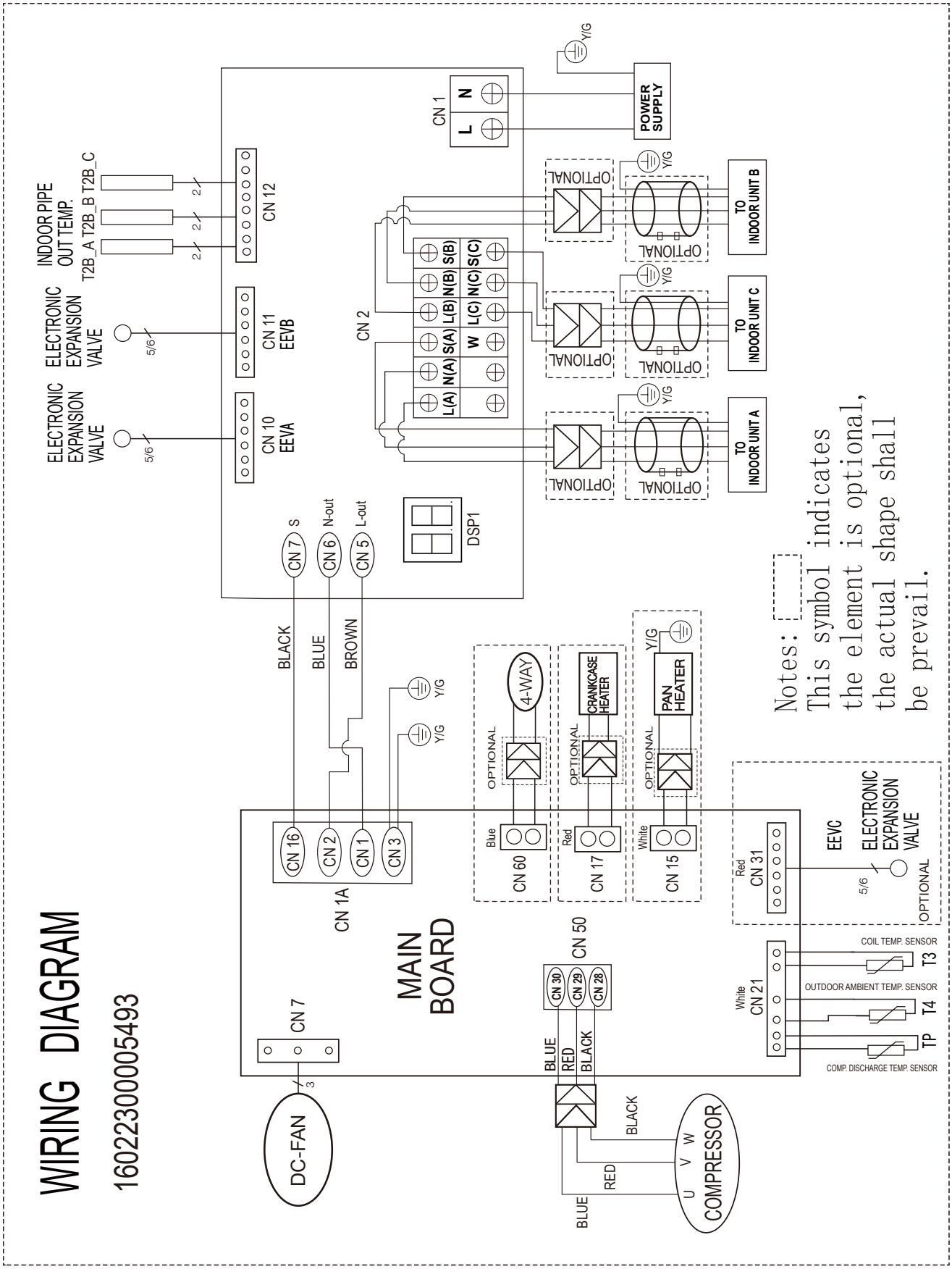

M3OG-21HFN8-Q, M3OA-27HFN8-Q

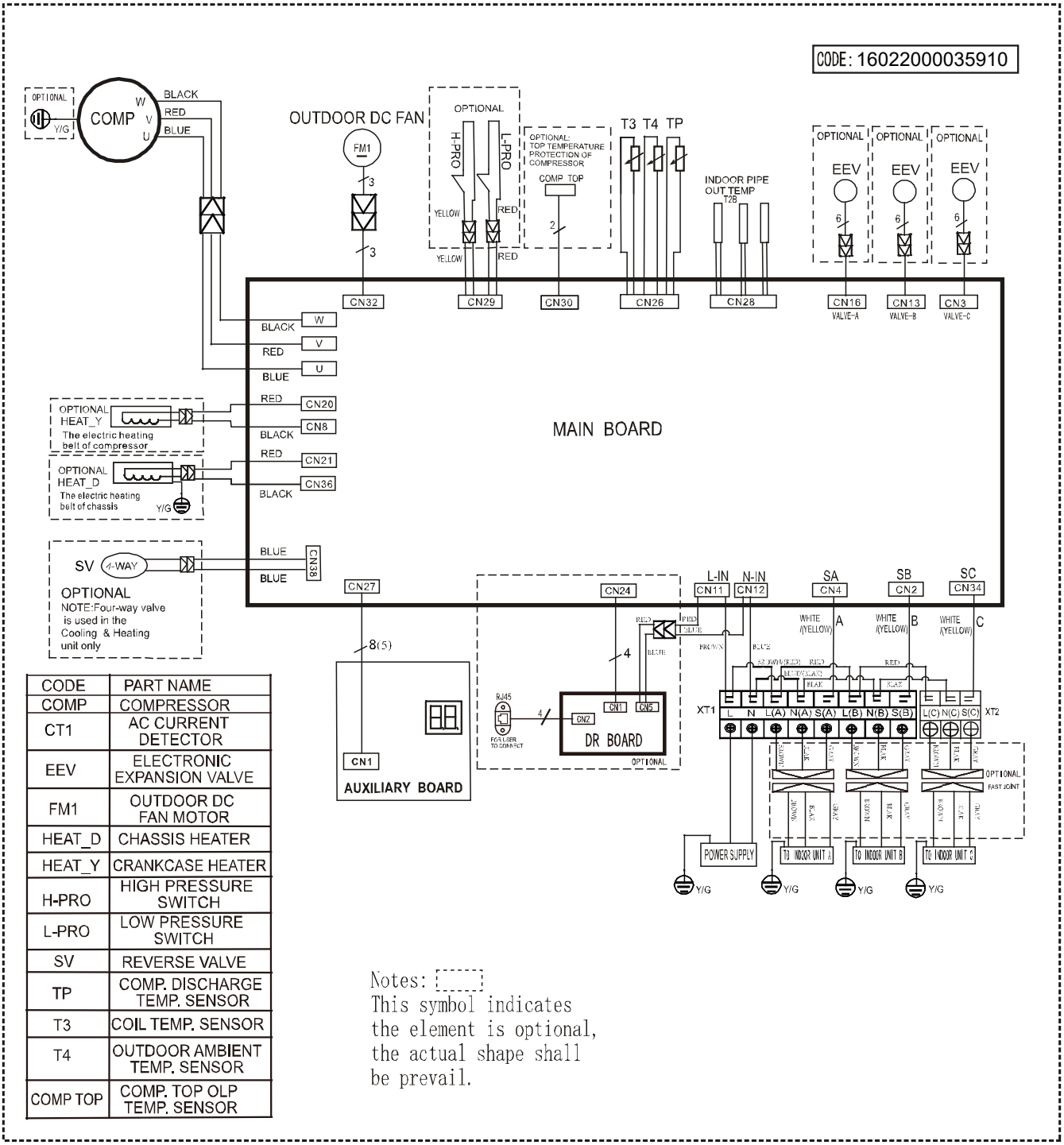

CODE	PART NAME
COMP	COMPRESSOR
CT1	AC CURRENT DETECTOR
EEV	ELECTRONIC EXPANSION VALVE
FM1	OUTDOOR DC FAN MOTOR
HEAT_D	CHASSIS HEATER
HEAT_Y	CRANKCASE HEATER
H-PRO	HIGH PRESSURE SWITCH
L-PRO	LOW PRESSURE SWITCH
SV	REVERSE VALVE
TP	COMP. DISCHARGE TEMP. SENSOR
T3	COIL TEMP. SENSOR
T4	OUTDOOR AMBIENT TEMP. SENSOR
COMP TOP	COMP. TOP OLP TEMP. SENSOR

Notes: [ ]
This symbol indicates the element is optional, the actual shape shall be prevail.

M2OF-18HFN8-Q

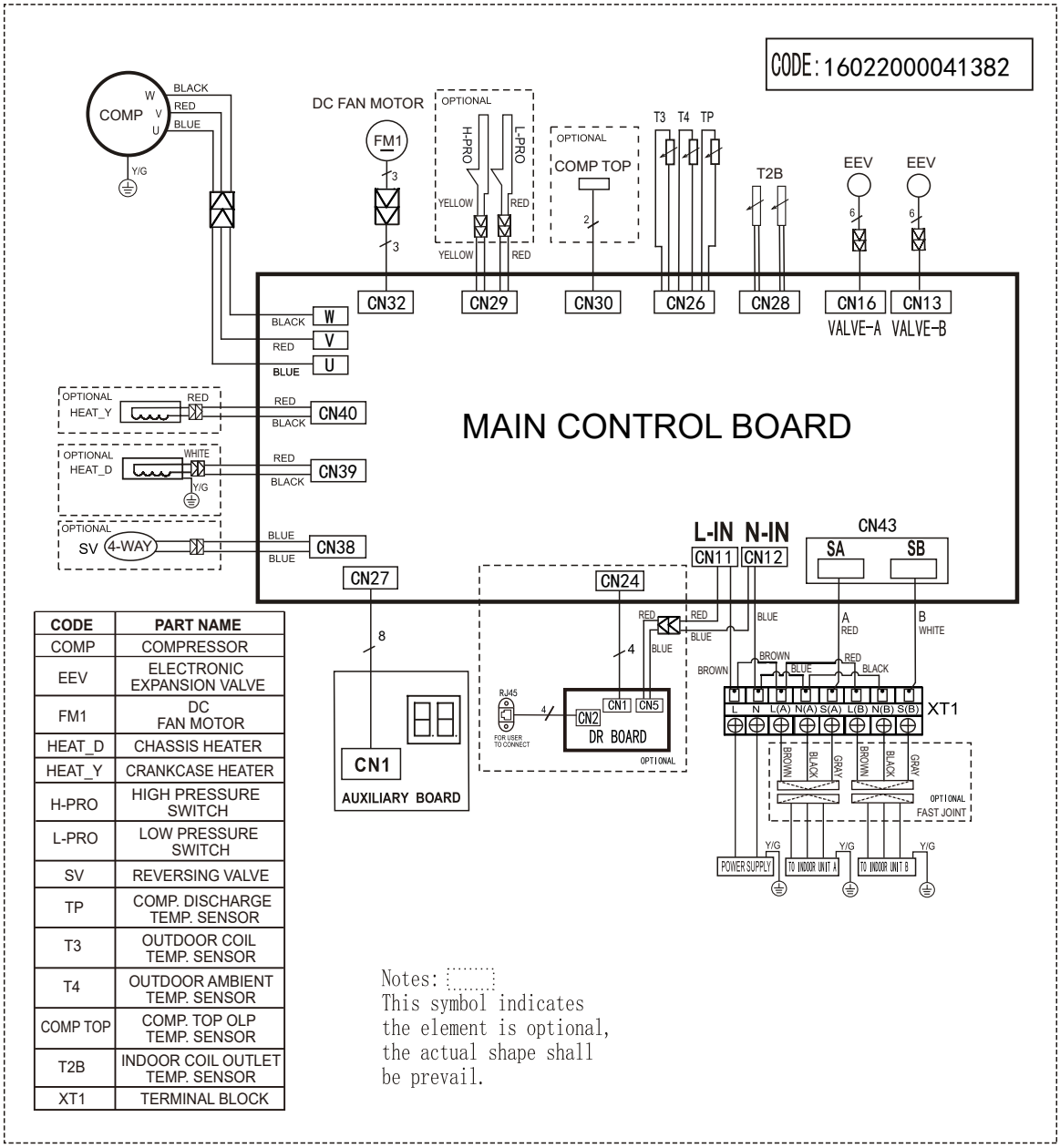

CODE	PART NAME
COMP	COMPRESSOR
EEV	ELECTRONIC EXPANSION VALVE
FM1	DC FAN MOTOR
HEAT_D	CHASSIS HEATER
HEAT_Y	CRANKCASE HEATER
H-PRO	HIGH PRESSURE SWITCH
L-PRO	LOW PRESSURE SWITCH
SV	REVERSING VALVE
TP	COMP. DISCHARGE TEMP. SENSOR
T3	OUTDOOR COIL TEMP. SENSOR
T4	OUTDOOR AMBIENT TEMP. SENSOR
COMP TOP	COMP. TOP OLP TEMP. SENSOR
T2B	INDOOR COIL OUTLET TEMP. SENSOR
XT1	TERMINAL BLOCK

Notes: ⋯⋯
This symbol indicates the element is optional, the actual shape shall be prevail.

Specifications

M3OB-27HFN8-Q

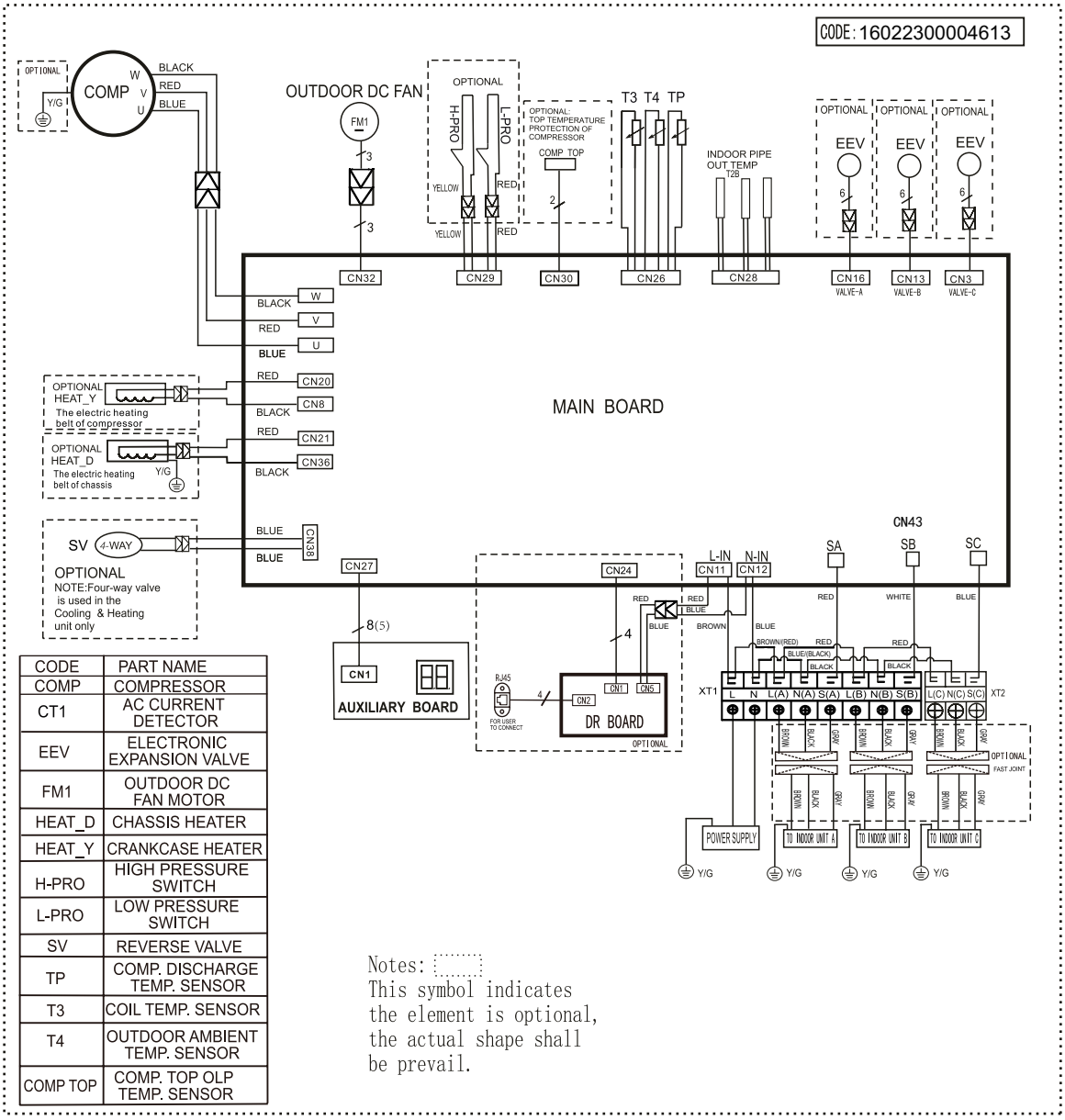

CODE	PART NAME
COMP	COMPRESSOR
CT1	AC CURRENT DETECTOR
EEV	ELECTRONIC EXPANSION VALVE
FM1	OUTDOOR DC FAN MOTOR
HEAT_D	CHASSIS HEATER
HEAT_Y	CRANKCASE HEATER
H-PRO	HIGH PRESSURE SWITCH
L-PRO	LOW PRESSURE SWITCH
SV	REVERSE VALVE
TP	COMP. DISCHARGE TEMP. SENSOR
T3	COIL TEMP. SENSOR
T4	OUTDOOR AMBIENT TEMP. SENSOR
COMP TOP	COMP. TOP OLP TEMP. SENSOR

Notes: ⋯⋯
This symbol indicates the element is optional, the actual shape shall be prevail.

M3OC-27HFN8-Q

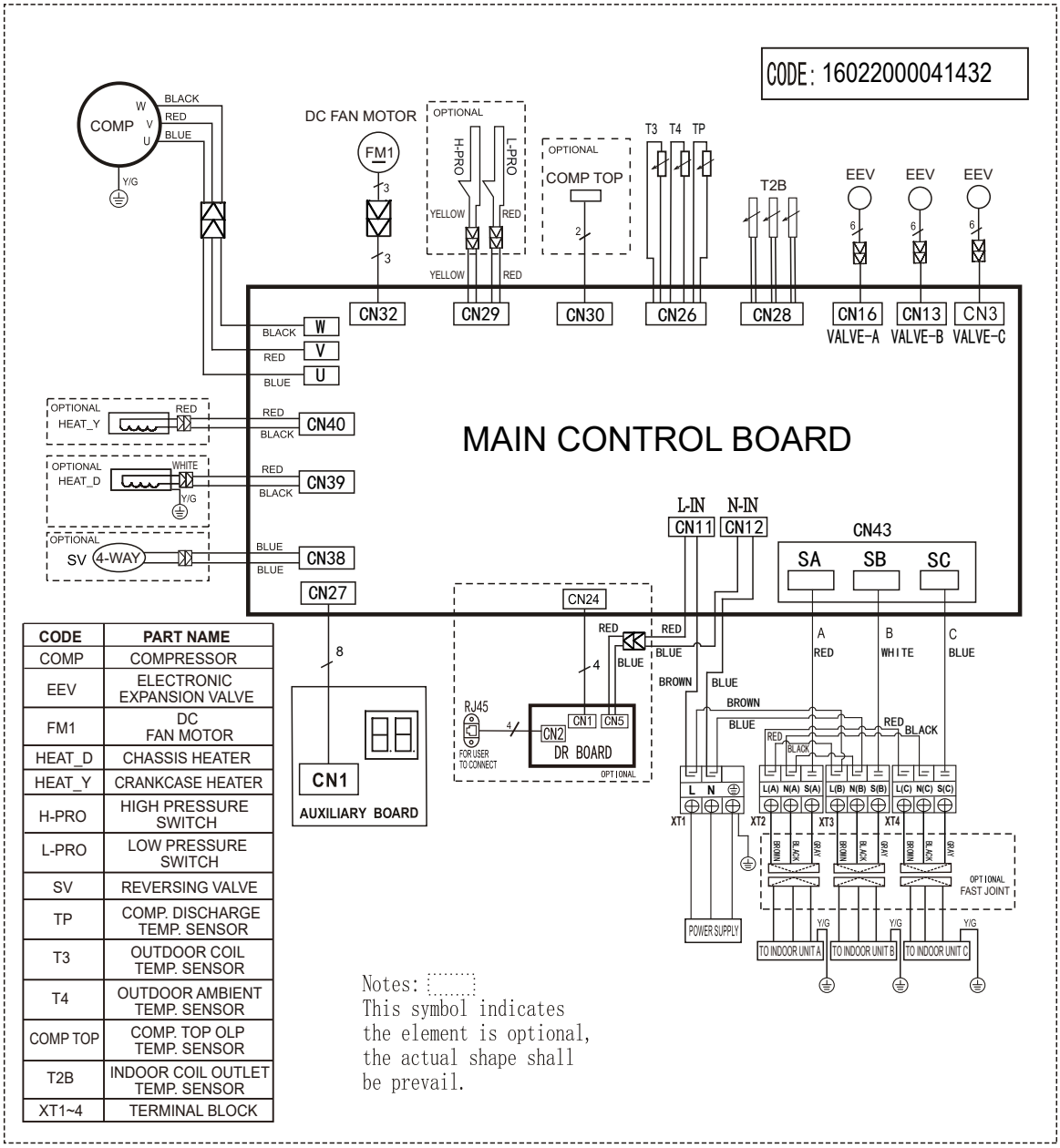

CODE	PART NAME
COMP	COMPRESSOR
EEV	ELECTRONIC EXPANSION VALVE
FM1	DC FAN MOTOR
HEAT_D	CHASSIS HEATER
HEAT_Y	CRANKCASE HEATER
H-PRO	HIGH PRESSURE SWITCH
L-PRO	LOW PRESSURE SWITCH
SV	REVERSING VALVE
TP	COMP. DISCHARGE TEMP. SENSOR
T3	OUTDOOR COIL TEMP. SENSOR
T4	OUTDOOR AMBIENT TEMP. SENSOR
COMP TOP	COMP. TOP OLP TEMP. SENSOR
T2B	INDOOR COIL OUTLET TEMP. SENSOR
XT1~4	TERMINAL BLOCK

Notes: ⋯⋯
This symbol indicates the element is optional, the actual shape shall be prevail.

M4OC-36HFN8-Q

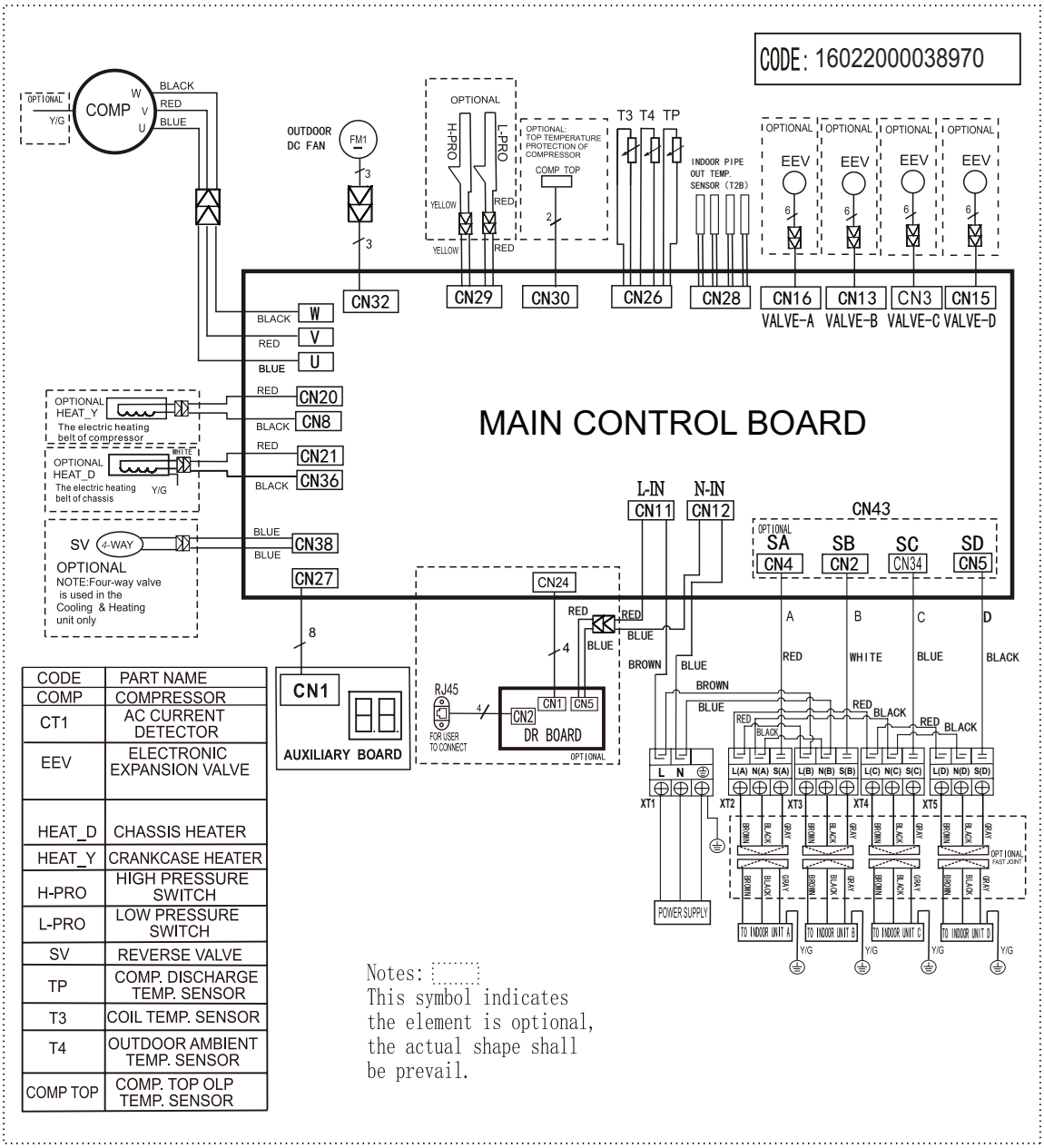

CODE	PART NAME
COMP	COMPRESSOR
CT1	AC CURRENT DETECTOR
EEV	ELECTRONIC EXPANSION VALVE
HEAT_D	CHASSIS HEATER
HEAT_Y	CRANKCASE HEATER
H-PRO	HIGH PRESSURE SWITCH
L-PRO	LOW PRESSURE SWITCH
SV	REVERSE VALVE
TP	COMP. DISCHARGE TEMP. SENSOR
T3	COIL TEMP. SENSOR
T4	OUTDOOR AMBIENT TEMP. SENSOR
COMP TOP	COMP. TOP OLP TEMP. SENSOR

Notes: This symbol indicates the element is optional, the actual shape shall be prevail.

M3OA-18HFN8-Q(HRU)

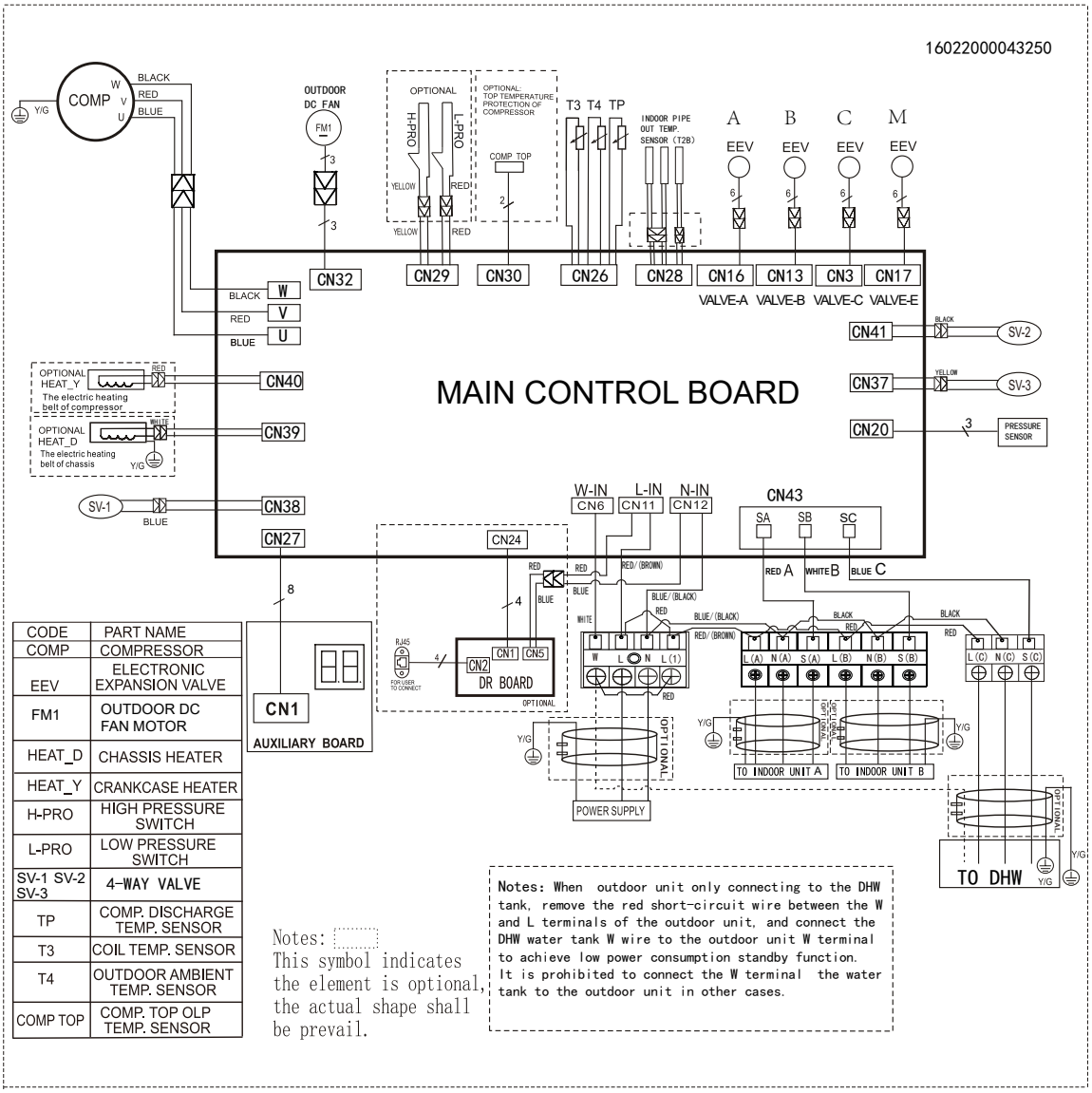

CODE	PART NAME
COMP	COMPRESSOR
EEV	ELECTRONIC EXPANSION VALVE
FM1	OUTDOOR DC FAN MOTOR
HEAT_D	CHASSIS HEATER
HEAT_Y	CRANKCASE HEATER
H-PRO	HIGH PRESSURE SWITCH
L-PRO	LOW PRESSURE SWITCH
SV-1 SV-2 SV-3	4-WAY VALVE
TP	COMP. DISCHARGE TEMP. SENSOR
T3	COIL TEMP. SENSOR
T4	OUTDOOR AMBIENT TEMP. SENSOR
COMP TOP	COMP. TOP OLP TEMP. SENSOR

Notes: This symbol indicates the element is optional, the actual shape shall be prevail.

Notes: When outdoor unit only connecting to the DHW tank, remove the red short-circuit wire between the W and L terminals of the outdoor unit, and connect the DHW water tank W wire to the outdoor unit W terminal to achieve low power consumption standby function. It is prohibited to connect the W terminal the water tank to the outdoor unit in other cases.

M4OA-24HFN8-Q

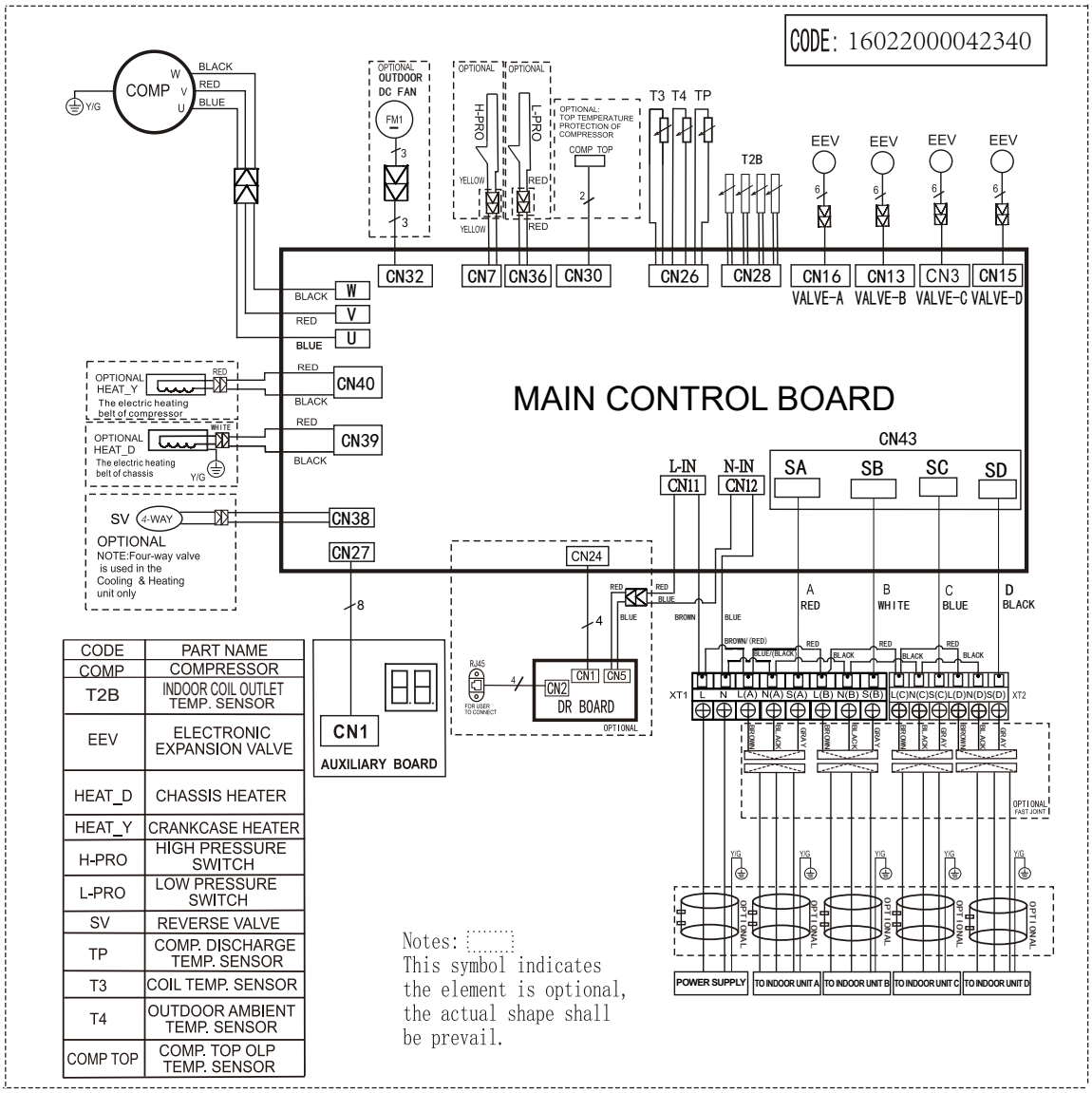

CODE	PART NAME
COMP	COMPRESSOR
T2B	INDOOR COIL OUTLET TEMP. SENSOR
EEV	ELECTRONIC EXPANSION VALVE
HEAT_D	CHASSIS HEATER
HEAT_Y	CRANKCASE HEATER
H-PRO	HIGH PRESSURE SWITCH
L-PRO	LOW PRESSURE SWITCH
SV	REVERSE VALVE
TP	COMP. DISCHARGE TEMP. SENSOR
T3	COIL TEMP. SENSOR
T4	OUTDOOR AMBIENT TEMP. SENSOR
COMP TOP	COMP. TOP OLP TEMP. SENSOR

Notes: ⋯⋯
This symbol indicates the element is optional, the actual shape shall be prevail.

M4OA-27HFN8-Q(HRU)

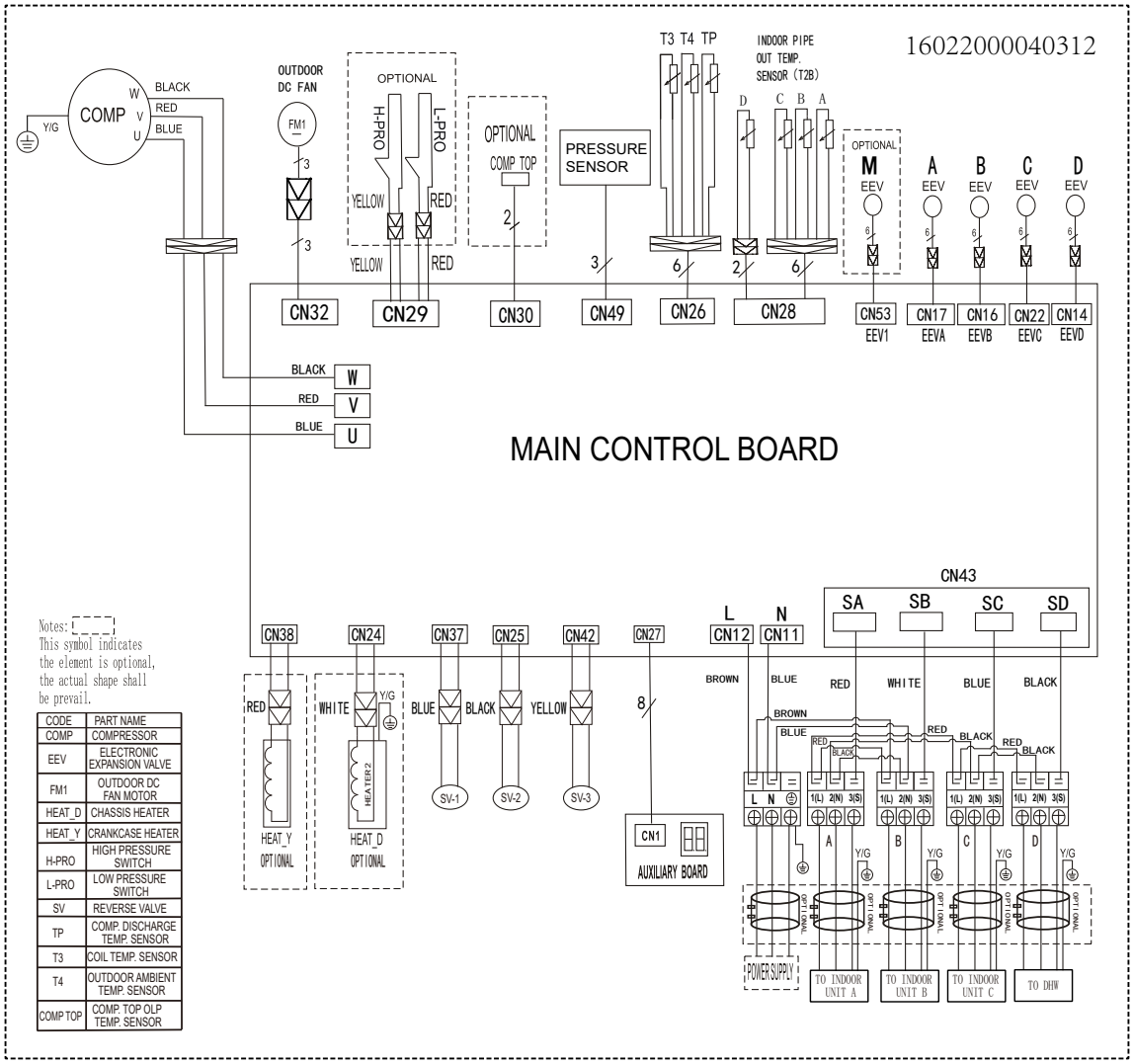

CODE	PART NAME
COMP	COMPRESSOR
EEV	ELECTRONIC EXPANSION VALVE
FM1	OUTDOOR DC FAN MOTOR
HEAT_D	CHASSIS HEATER
HEAT_Y	CRANKCASE HEATER
H-PRO	HIGH PRESSURE SWITCH
L-PRO	LOW PRESSURE SWITCH
SV	REVERSE VALVE
TP	COMP. DISCHARGE TEMP. SENSOR
T3	COIL TEMP. SENSOR
T4	OUTDOOR AMBIENT TEMP. SENSOR
COMP TOP	COMP. TOP OLP TEMP. SENSOR

M4OB-27HFN8-Q(HRU)

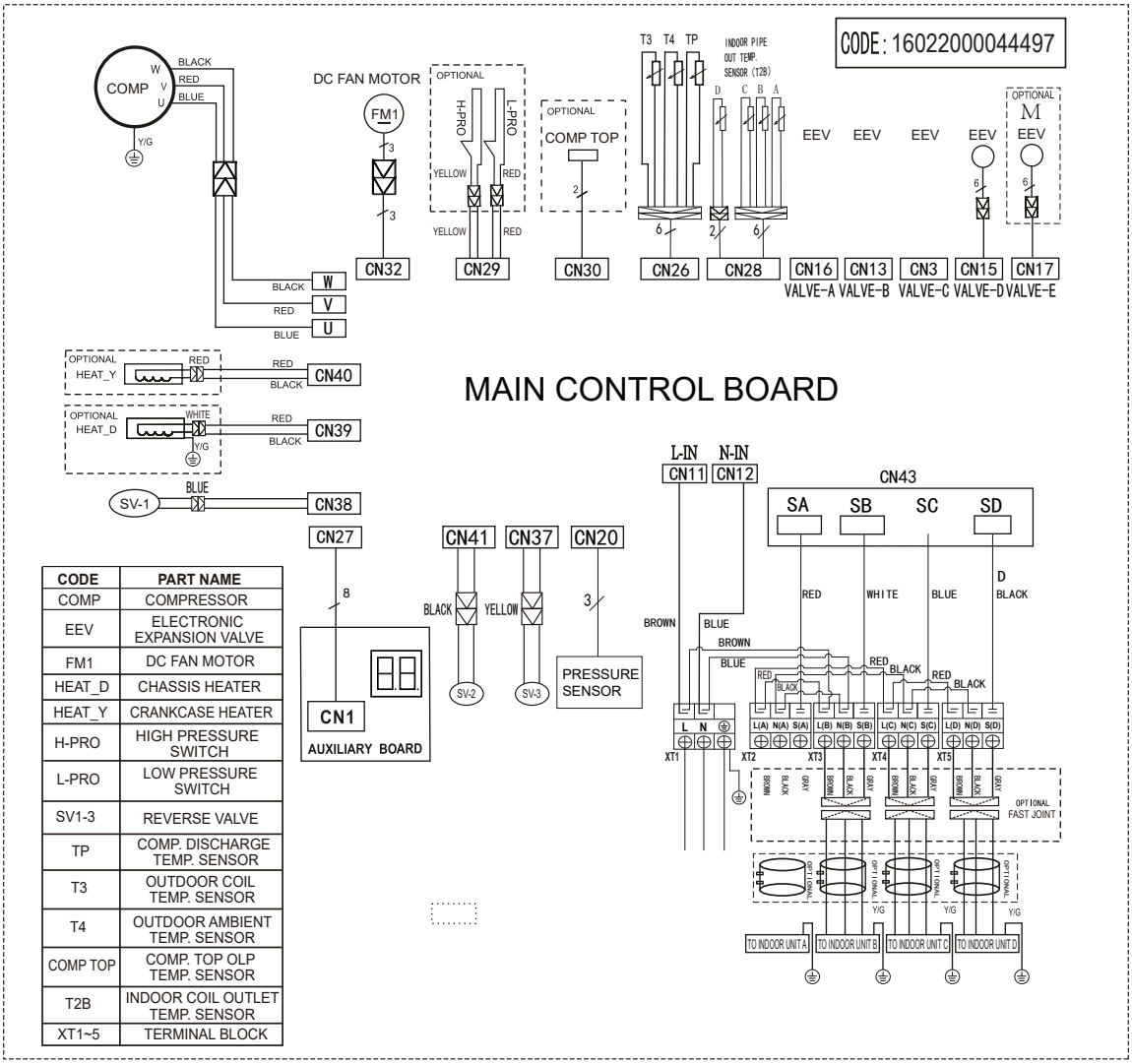

CODE	PART NAME
COMP	COMPRESSOR
EEV	ELECTRONIC EXPANSION VALVE
FM1	DC FAN MOTOR
HEAT_D	CHASSIS HEATER
HEAT_Y	CRANKCASE HEATER
H-PRO	HIGH PRESSURE SWITCH
L-PRO	LOW PRESSURE SWITCH
SV1-3	REVERSE VALVE
TP	COMP. DISCHARGE TEMP. SENSOR
T3	OUTDOOR COIL TEMP. SENSOR
T4	OUTDOOR AMBIENT TEMP. SENSOR
COMP TOP	COMP. TOP OLP TEMP. SENSOR
T2B	INDOOR COIL OUTLET TEMP. SENSOR
XT1~5	TERMINAL BLOCK

8. Refrigerant Cycle Diagrams

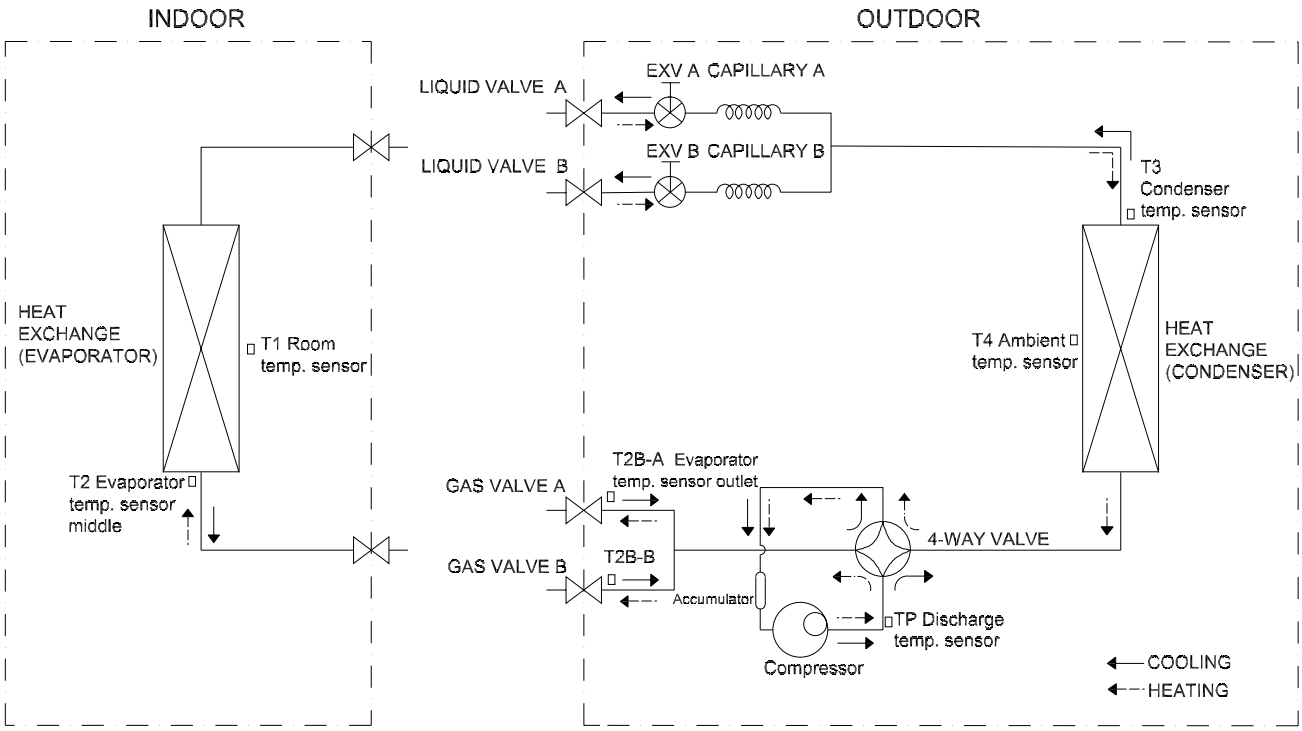

Model	Pipe Size (Diameter:ø)		Piping length (m)			Elevation (m)	
			Rated	Max			
	Gas	Liquid		Single	Total	IDU and ODU	Between IDUs
M2OG-14HFN8-Q	2x9.52	2x6.35	15	25	40	15	10
M2OC-18HFN8-Q							
M2OD-18HFN8-Q							

Note: For M2OC-18HFN8-Q, there is no Accumulator.

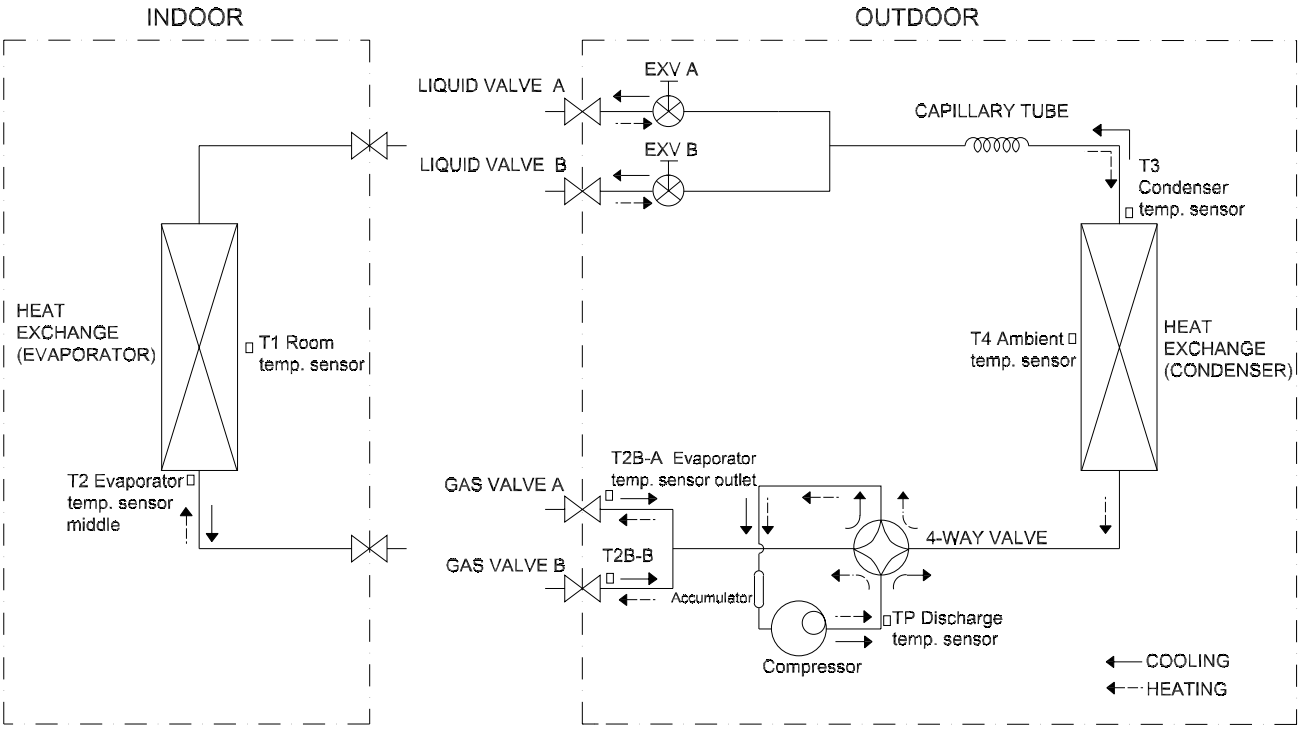

Model	Pipe Size (Diameter:ø)		Piping length (m)			Elevation (m)	
			Rated	Max			
	Gas	Liquid		Single	Total	IDU and ODU	Between IDUs
M2OH-14HFN8-Q	2x9.52	2x6.35	15	25	40	15	10
M2OE-18HFN8-Q							
M2OF-18HFN8-Q							

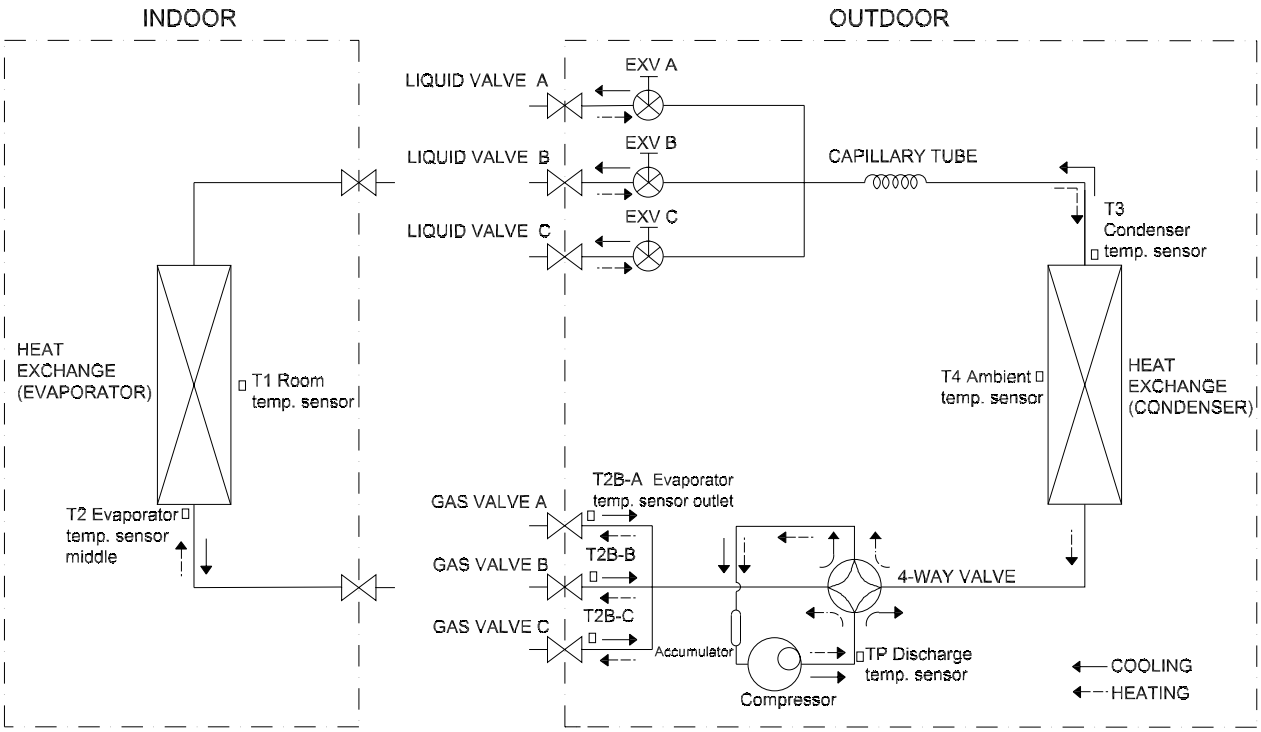

Model	Pipe Size (Diameter:ø)		Piping length (m)			Elevation (m)	
			Rated	Max			
	Gas	Liquid		Single	Total	IDU and ODU	Between IDUs
M3OA-18HFN8-Q	3x9.52	3x6.35	22.5	30	60	15	10
M3OF-21HFN8-Q							
M3OE-27HFN8-Q							
M3OF-27HFN8-Q							
M3OG-21HFN8-Q							
M3OA-27HFN8-Q							

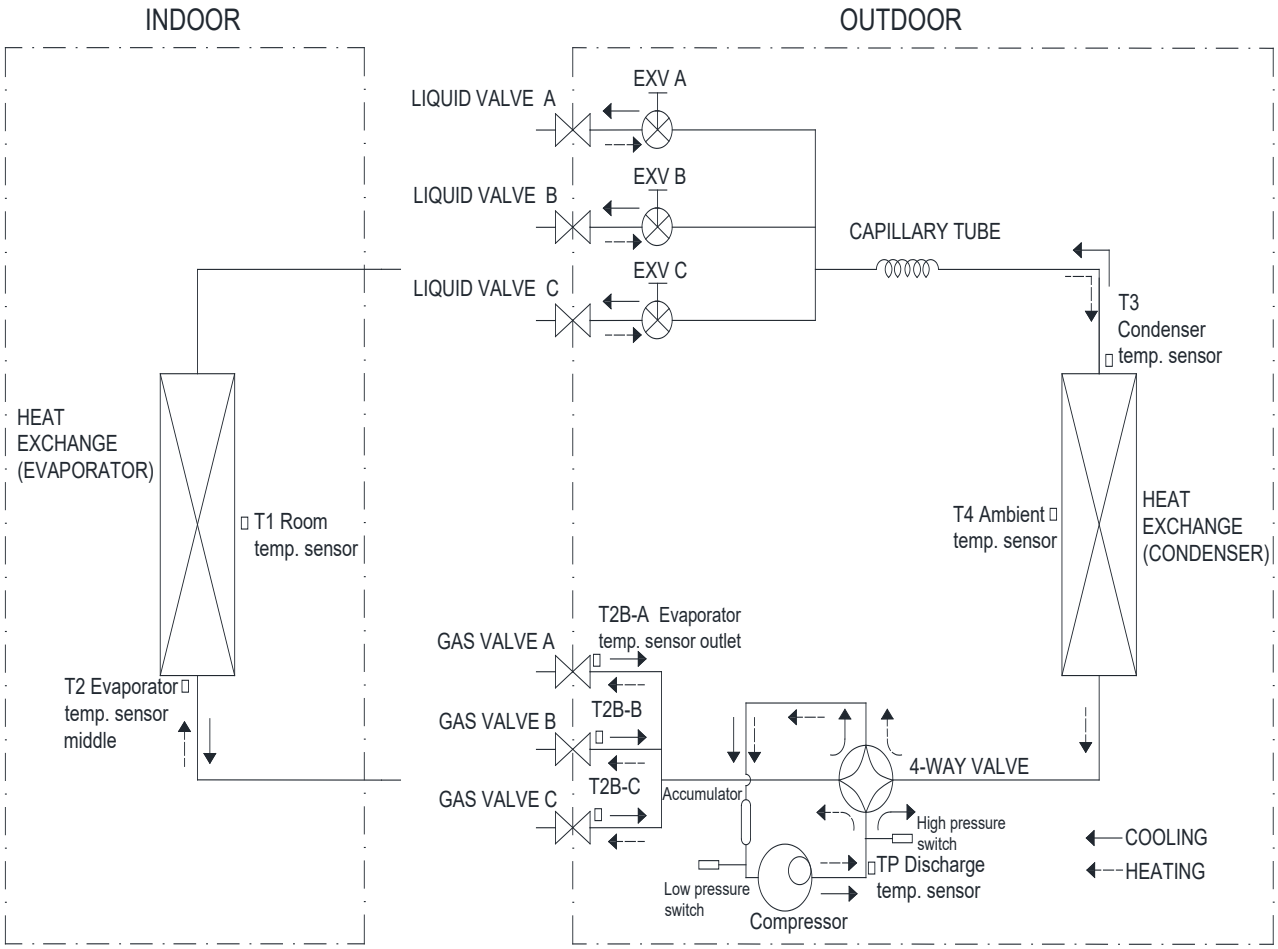

Model	Pipe Size (Diameter:ø)		Piping length (m)			Elevation (m)	
			Rated	Max			
	Gas	Liquid		Single	Total	IDU and ODU	Between IDUs
M3OB-27HFN8-Q	3x9.52	3x6.35	22.5	30	60	15	10
M3OC-27HFN8-Q	2x9.52+1x12.7						

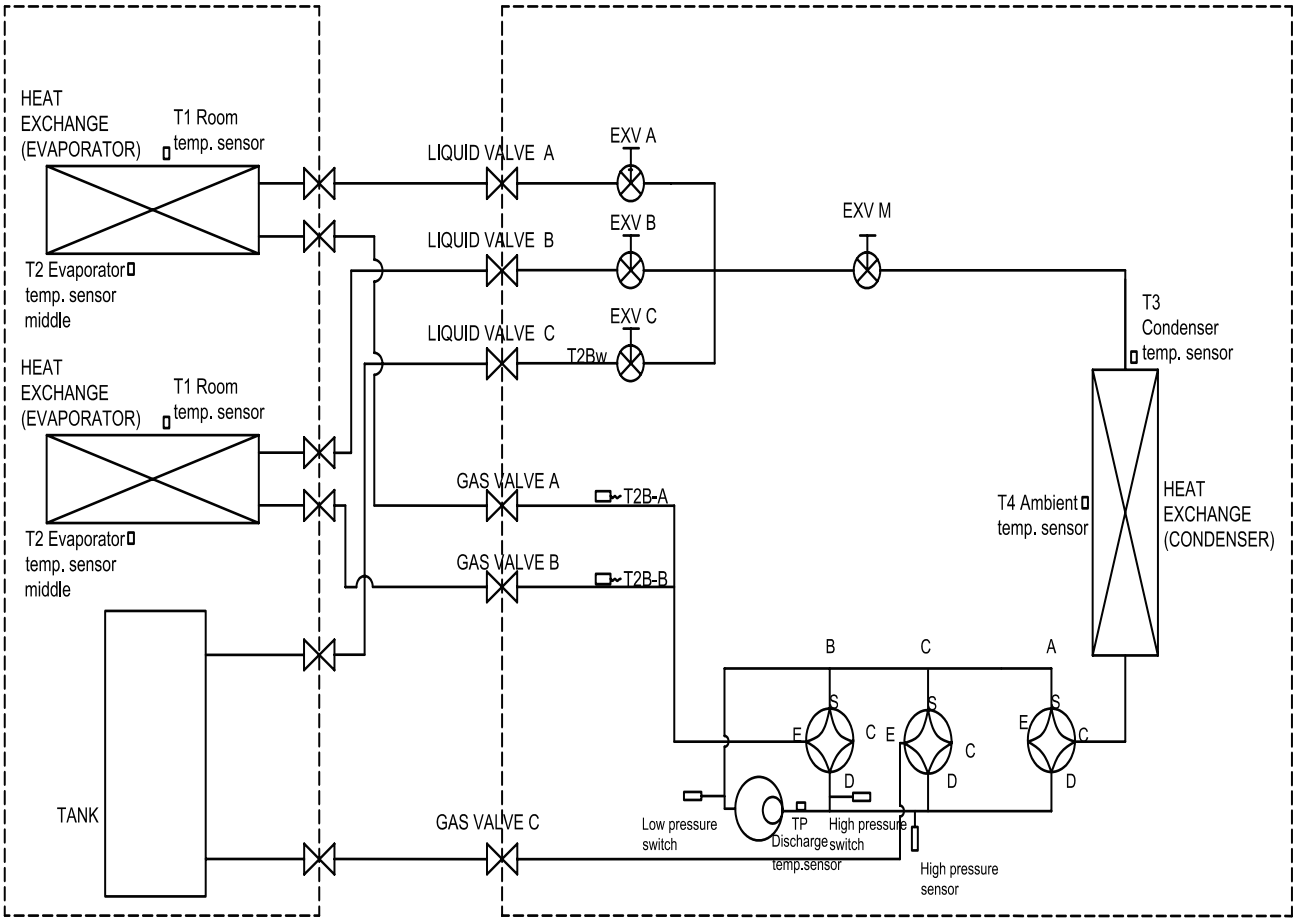

Model	Pipe Size (Diameter:ø)		Piping length (m)			Elevation (m)	
			Rated	Max			
	Gas	Liquid		Single	Total	IDU and ODU	Between IDUs
M3OA-18HFN8-Q(HRU)	3x9.52	3x6.35	22.5	30(20 for DHW)	60	15	10

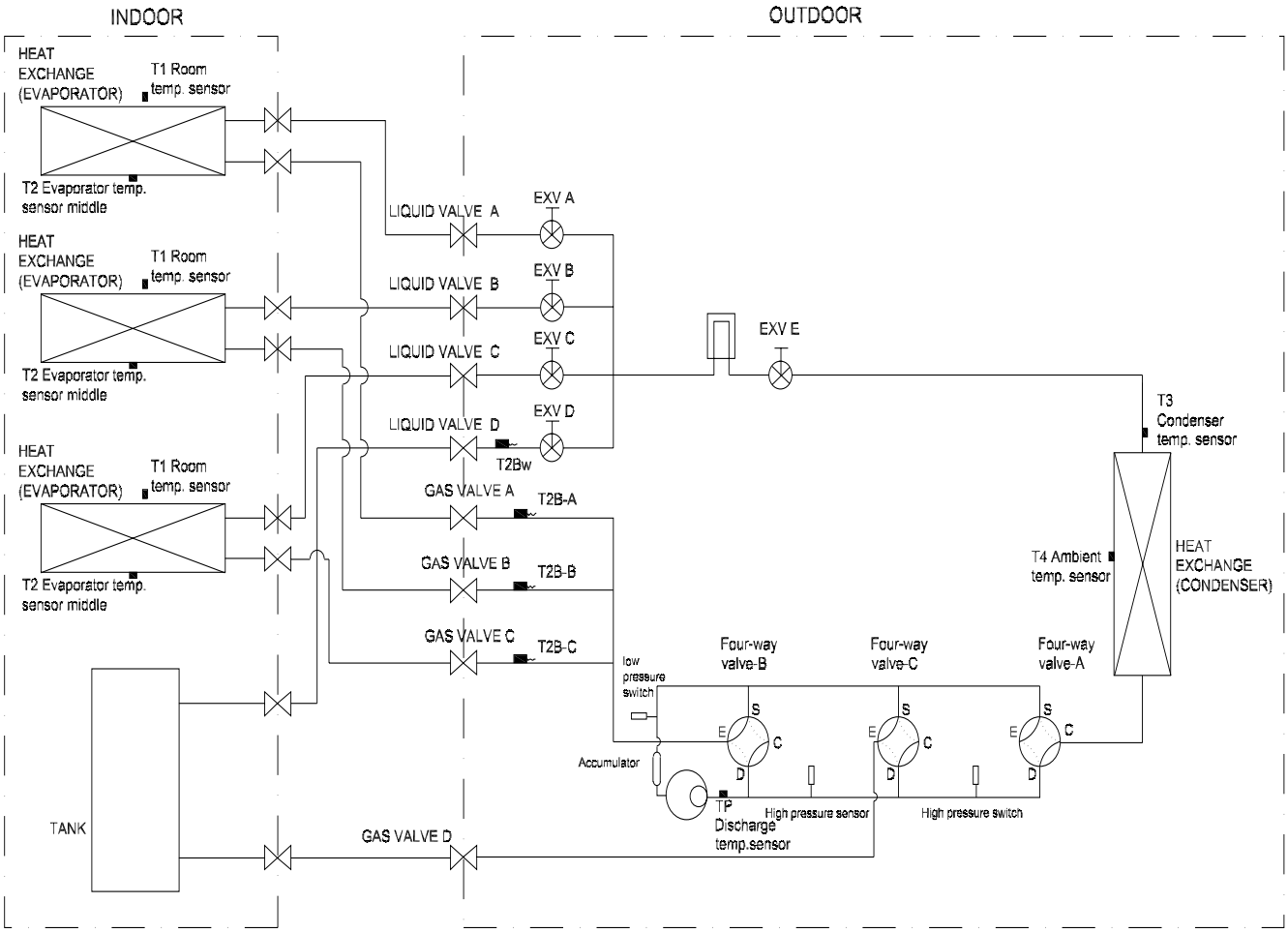

Model	Pipe Size (Diameter:ø)		Piping length (m)			Elevation (m)	
			Rated	Max			
	Gas	Liquid		Single	Total	IDU and ODU	Between IDUs
M4OA-27HFN8-Q(HRU)	3x9.52+1x12.7	4x6.35	22.5	35(20 for DHW)	80	15	10
M4OB-27HFN8-Q(HRU)	3x9.52+1x12.7	4x6.35	22.5	35(20 for DHW)	80	15	10

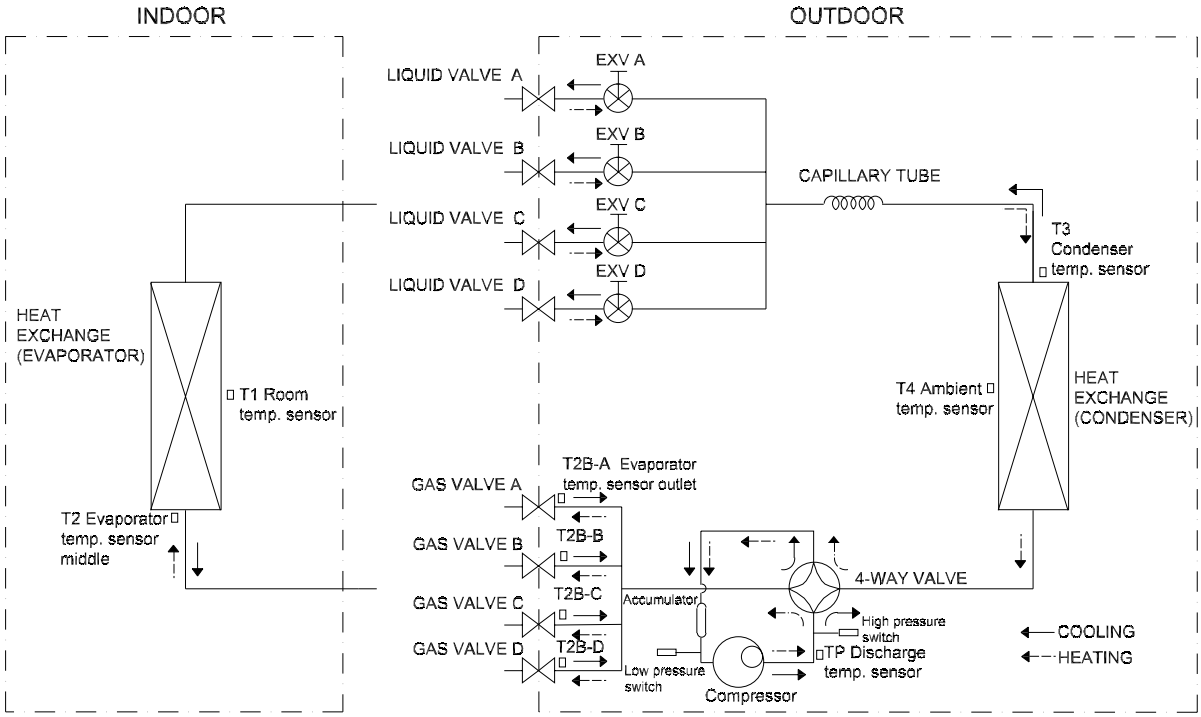

Model	Pipe Size (Diameter:ø)		Piping length (m)			Elevation (m)	
			Rated	Max			
	Gas	Liquid		Single	Total	IDU and ODU	Between IDUs
M4OE-28HFN8-Q	3x9.52+1x12.7	4x6.35	30	35	80	15	10
M4OC-36HFN8-Q							
M4OB-36HFN8-Q							
M4OA-24HFN8-Q	4x9.52	4x6.35					

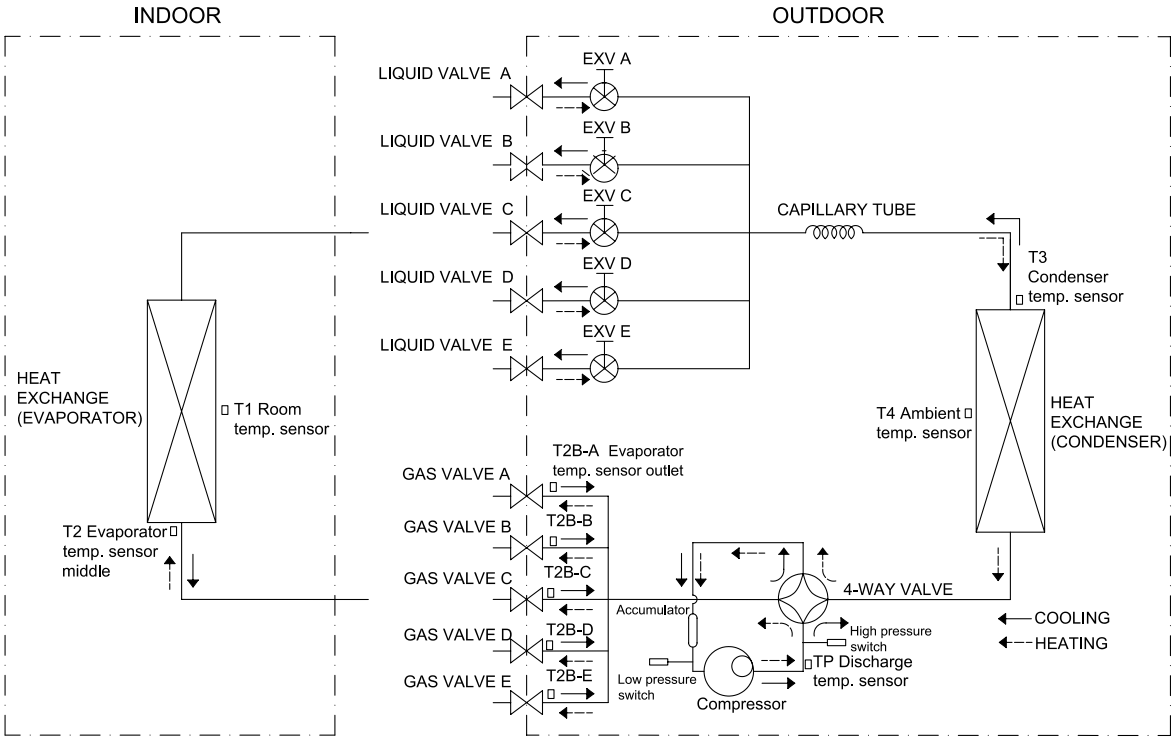

Model	Pipe Size (Diameter:ø)		Piping length (m)			Elevation (m)	
			Rated	Max			
	Gas	Liquid		Single	Total	IDU and ODU	Between IDUs
M5OD-42HFN8-Q	4x9.52+1x12.7	5x6.35	37.5	35	80	15	10
M5OE-42HFN8-Q	4x9.52+1x12.7	5x6.35	37.5	35	80	15	10

9. Noise Criterion Curves

9.1 Indoor Unit

Duct Type

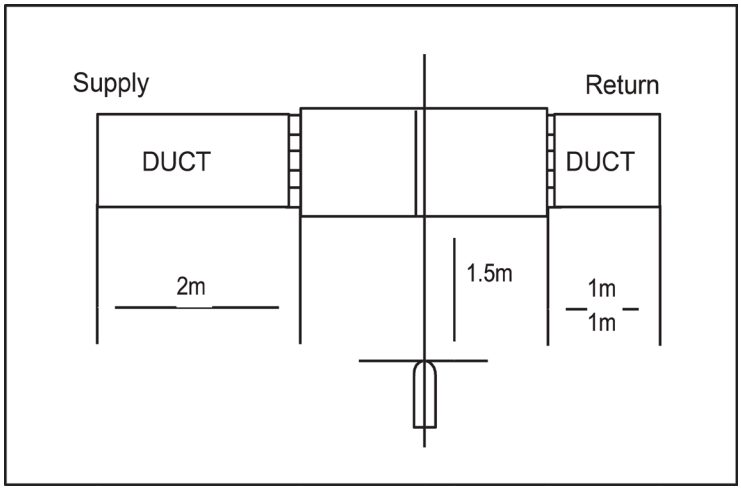

Notes:

-Sound measured at 1.5m away from the center of the unit.

-Data is valid at nominal operation condition

-Reference acoustic pressure OdB = 20μPa

-Sound level will vary depending on a range of factors such as the construction -(acoustic absorption coefficient) of particular room in which the equipment is installed.

-The operating conditions are assumed to be standard.

MTIU-07HWFNX-QRD0W/MTIU-07HWFNX-QRD0W(GA)

MTIU-09HWFNX-QRD0W/MTIU-09HWFNX-QRD0W(GA)

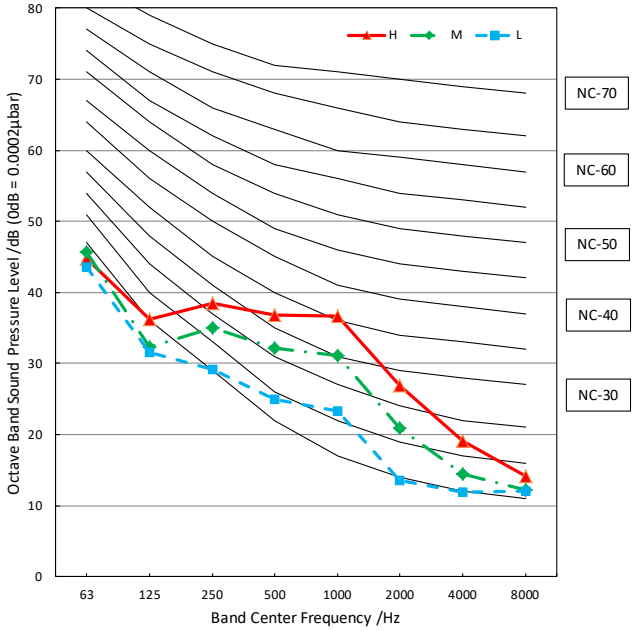

MTIU-12HWFNX-QRD0W(GA)

MTIU-12HWFNX-QRD0W

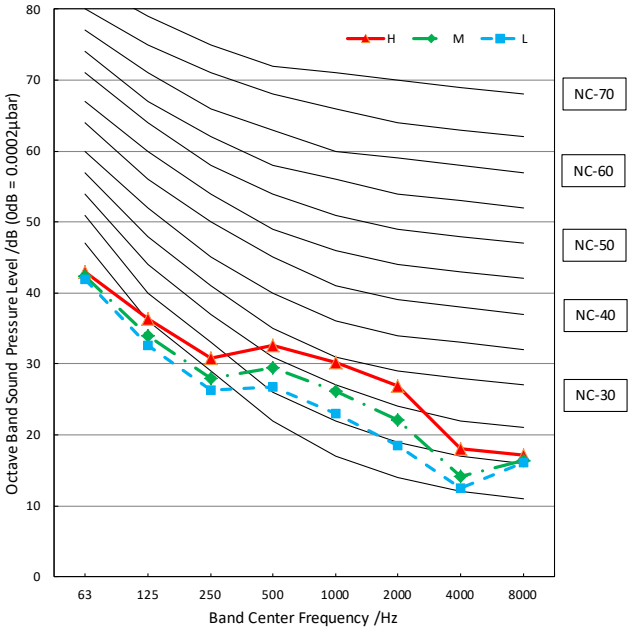

MTIU-18HWFNX-QRD0W

MTIU-18HWFNX-QRD0W(GA)

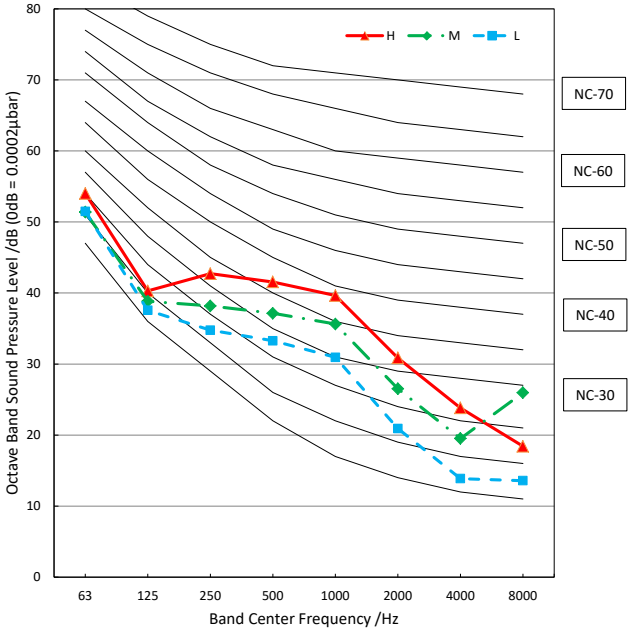

MTJ-07HWFNX-QRD1W(GA)

MTJ-09HWFNX-QRD1W(GA)

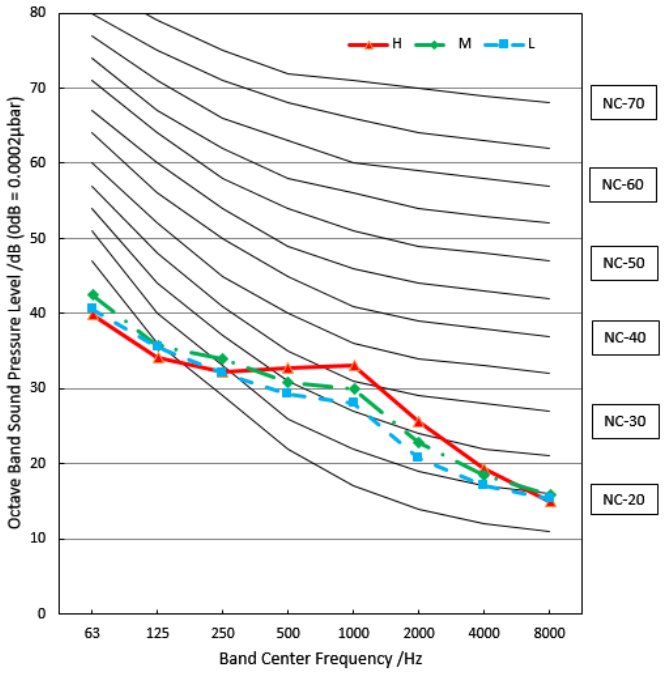

MTJ-12HWFNX-QRD1W(GA)

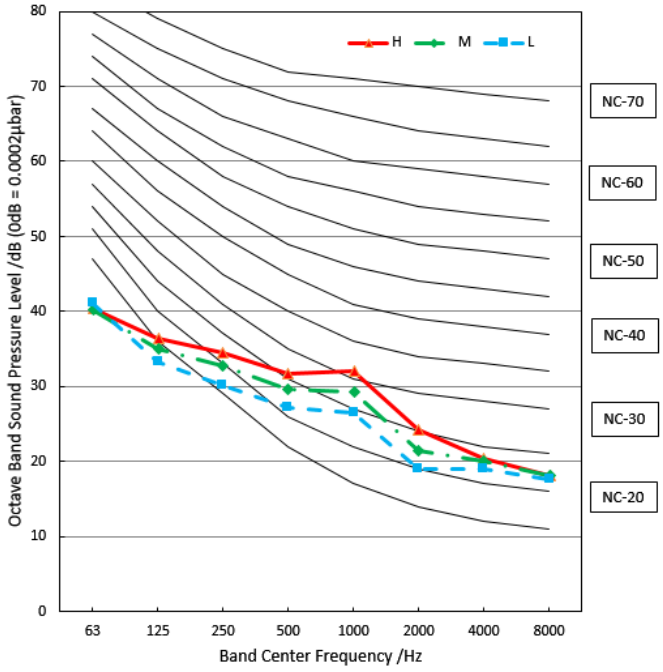

MTJ-18HWFNX-QRD1W(GA)

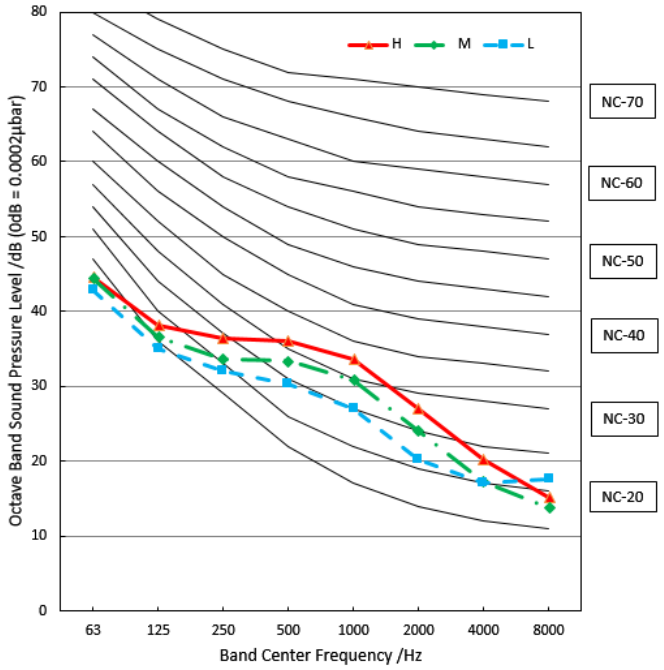

MTJ-24HWFNX-QRD1W(GA)

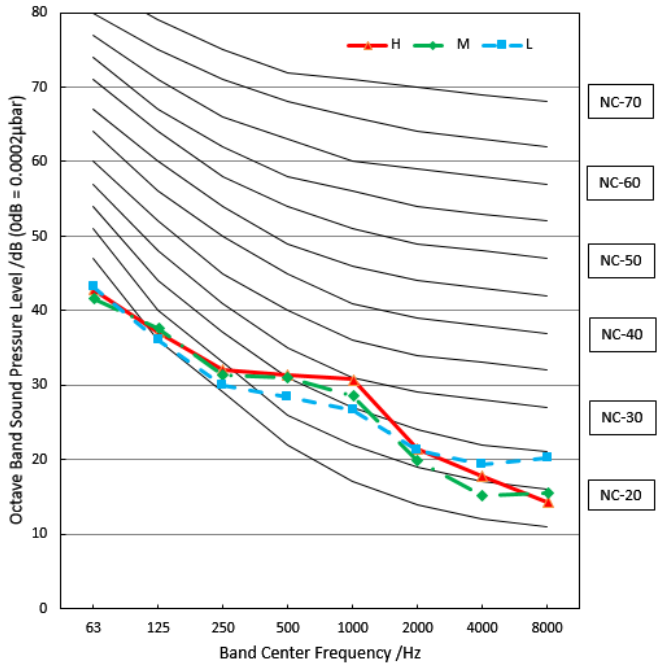

Compact Cassette Type

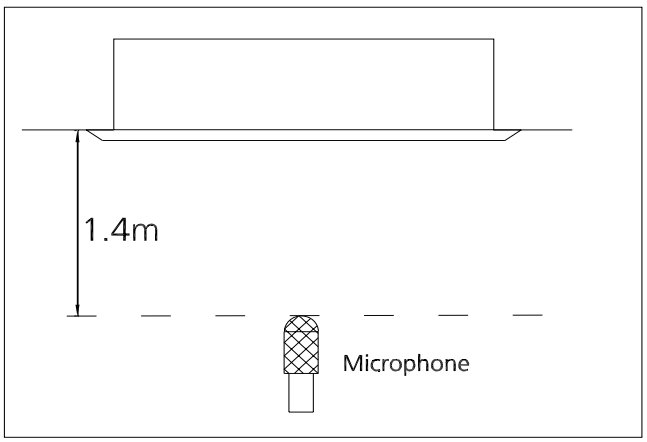

Notes:

-Sound measured at 1.4m away from the noisiest location of the unit.

-Data is valid at nominal operation condition

-Reference acoustic pressure OdB = 20μPa

-Sound level will vary depending on a range of factors such as the construction -(acoustic absorption coefficient) of particular room in which the equipment is installed.

-The operating conditions are assumed to be standard.

MCA3I-07HRFNX-QRD0/MCA3U-07HRFNX-QRD0W(GA)

MCA3I-09HRFN8-QRD0/MCA3U-09HRFNX-QRD0W(GA)

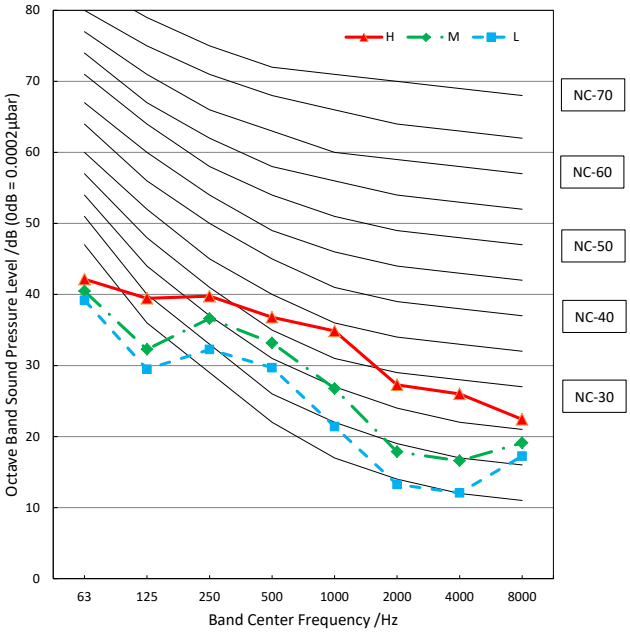

MCA3U-12HRFNX-QRD0W(GA)

MCA3U-12HRFNX-QRD0W

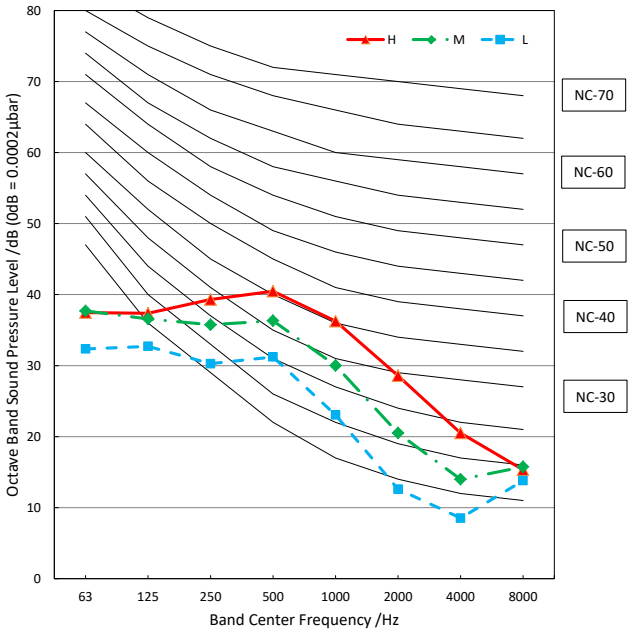

MCA3U-18HRFNX-QRD0W

MCA3U-18HRFNX-QRD0W(GA)

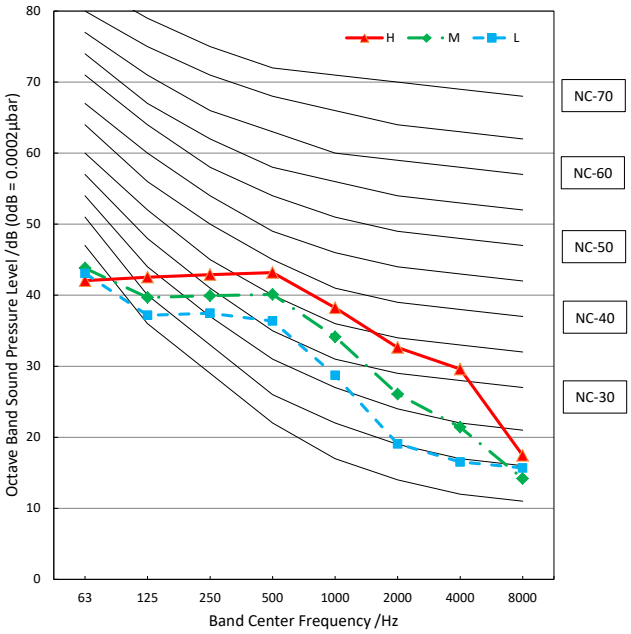

MCA4U-09HRFNX-QRD1W(GA)

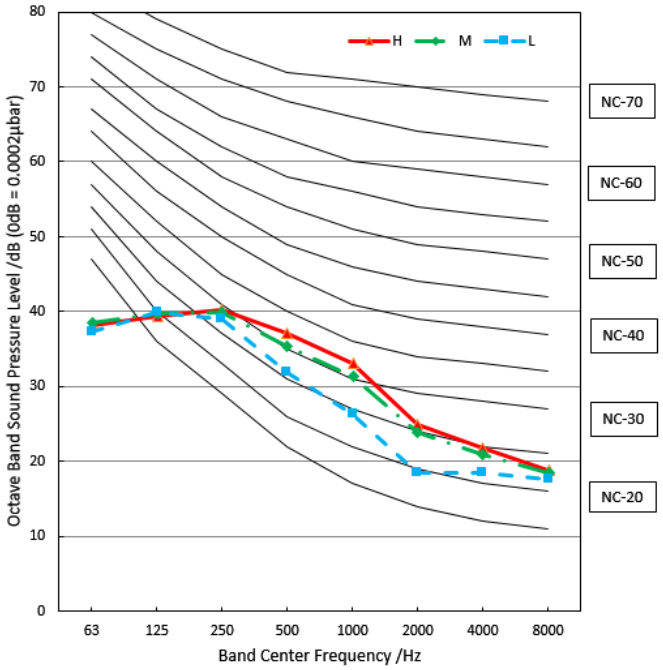

MCA4U-12HRFNX-QRD1W(GA)

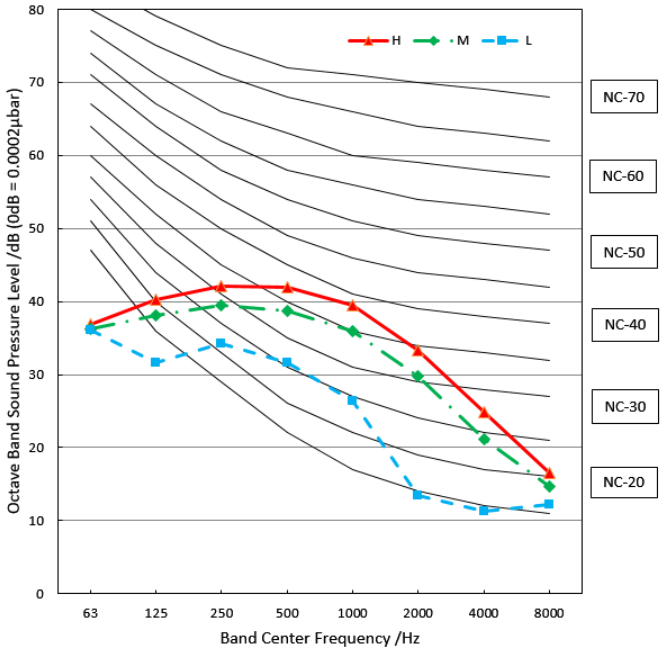

MCA4U-18HRFNX-QRD1W(GA)

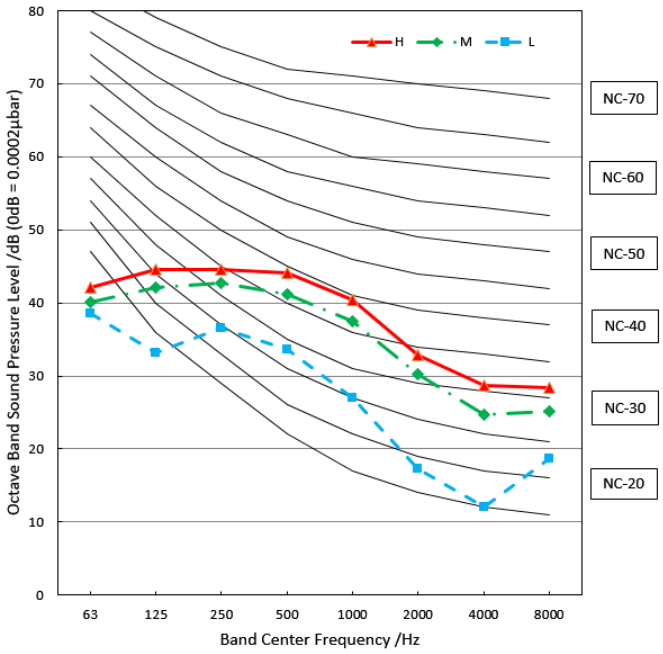

MCD1-24HRFNX-QRD0W(GA)

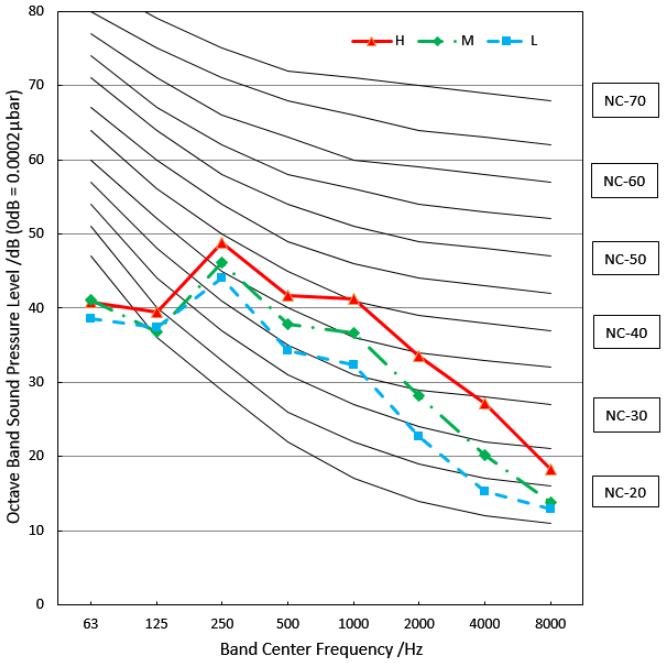

Console Type

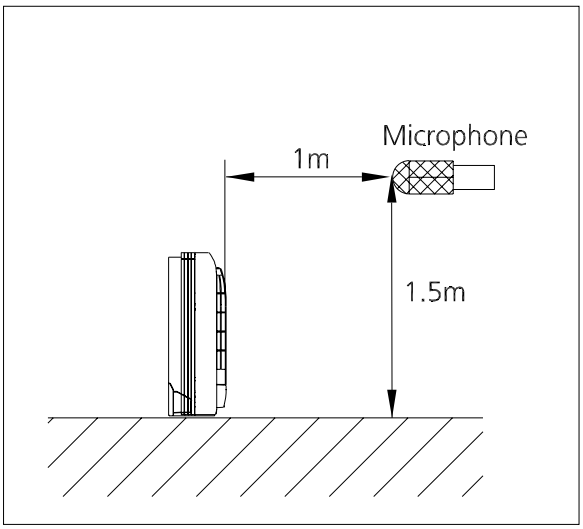

Notes:

-Sound measured at 1m/3.28 away from the unit and 1.5m/4.92ft away from the ground.

-Data is valid at nominal operation condition

-Reference acoustic pressure OdB = 20μPa

-Sound level will vary depending on a range of factors such as the construction -(acoustic absorption coefficient) of particular room in which the equipment is installed.

-The operating conditions are assumed to be standard.

MFA2U-09HRFNX-QRD0W(GA)

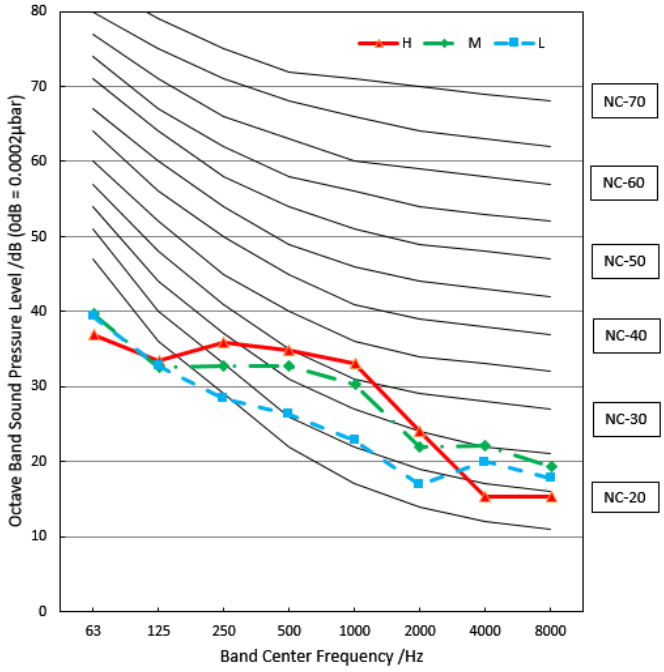

MFA2U-12HRFNX-QRD0W(GA)

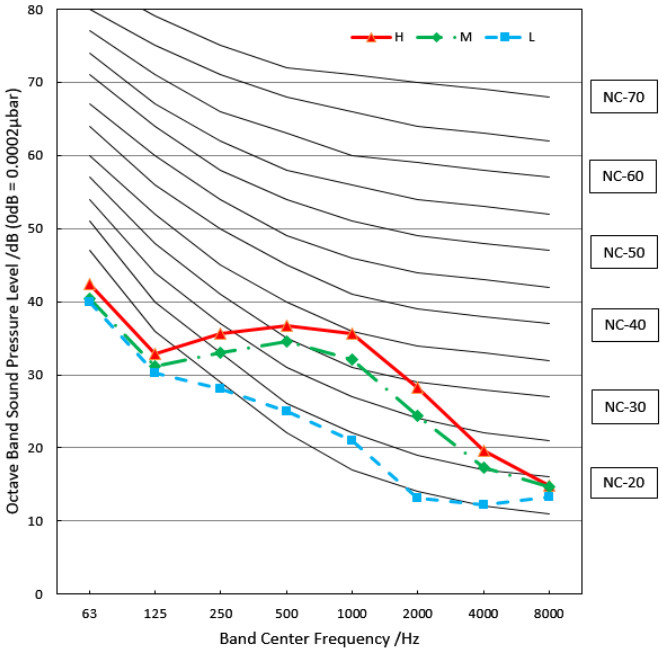

MFA2U-17HRFNX-QRD0W(GA)

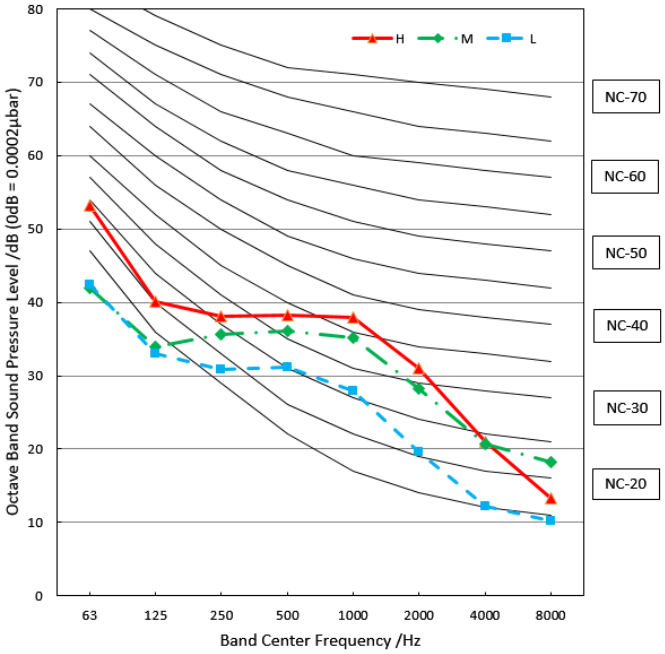

Wall mounted Type

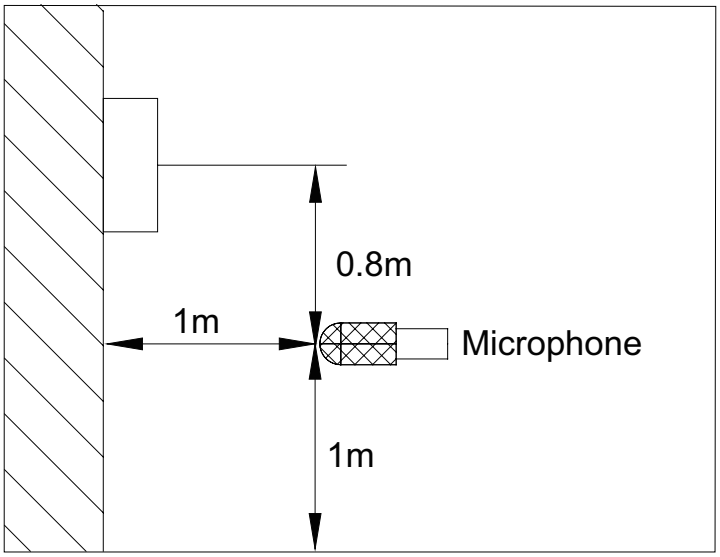

Notes:

-Sound measured at 1.0m away from the center of the unit.

-Data is valid at nominal operation condition

-Reference acoustic pressure OdB = 20μPa

-Sound level will vary depending on a range of factors such as the construction -(acoustic absorption coefficient) of particular room in which the equipment is installed.

-The operating conditions are assumed to be standard.

MSAFBU-07HRDNX-QRD0GW

MSAFBU-09HRDN8-QRD0GW

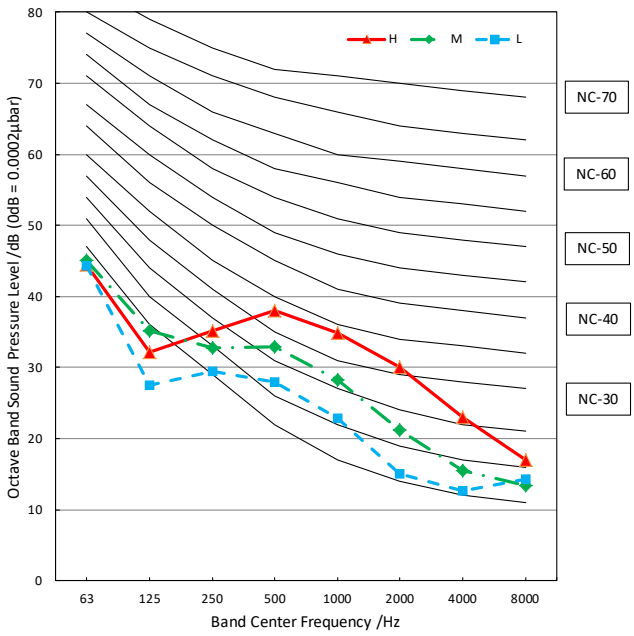

MSAFBU-12HRDN8-QRD0GW

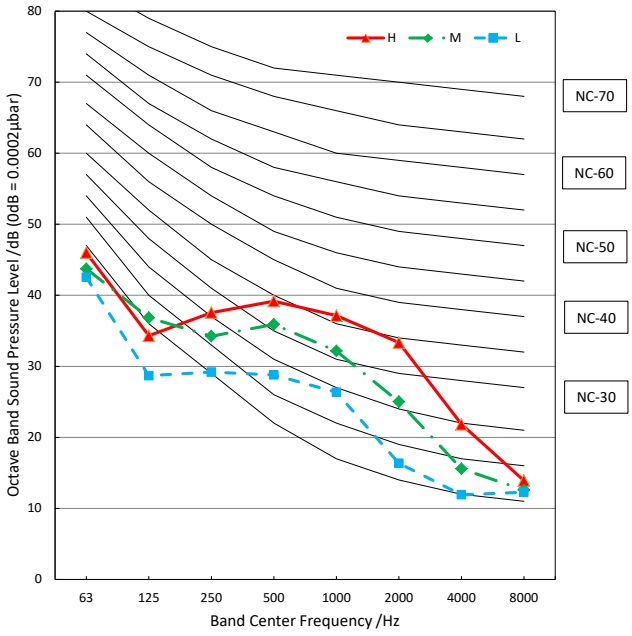

MSAFAU-09HRFN8-QRD1GW

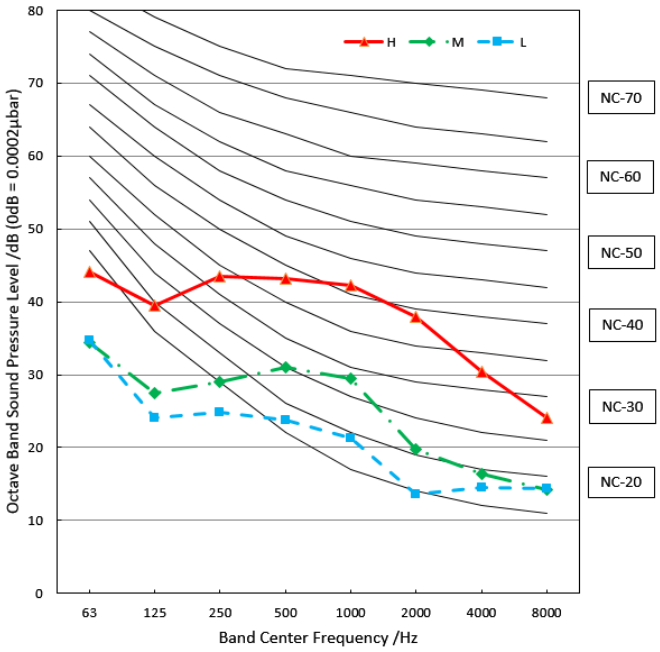

MSAFBU-12HRFN8-QRD1GW

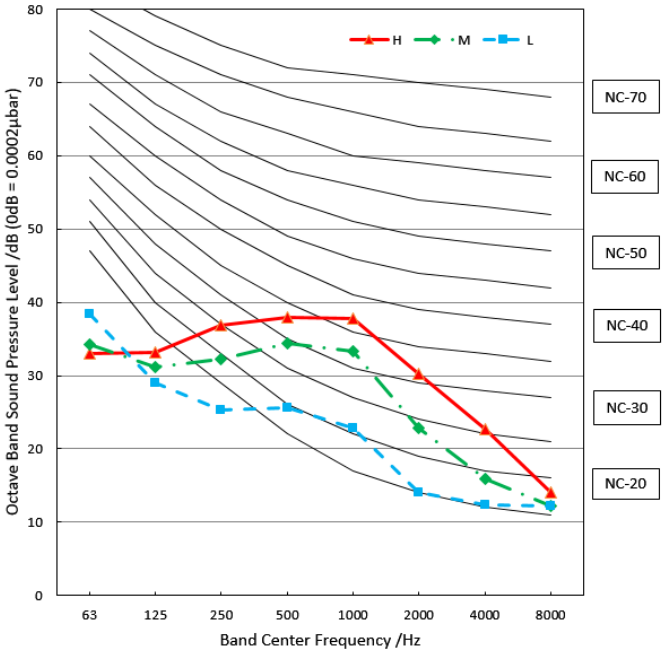

MSAFCU-18HRFN8-QRD0GW

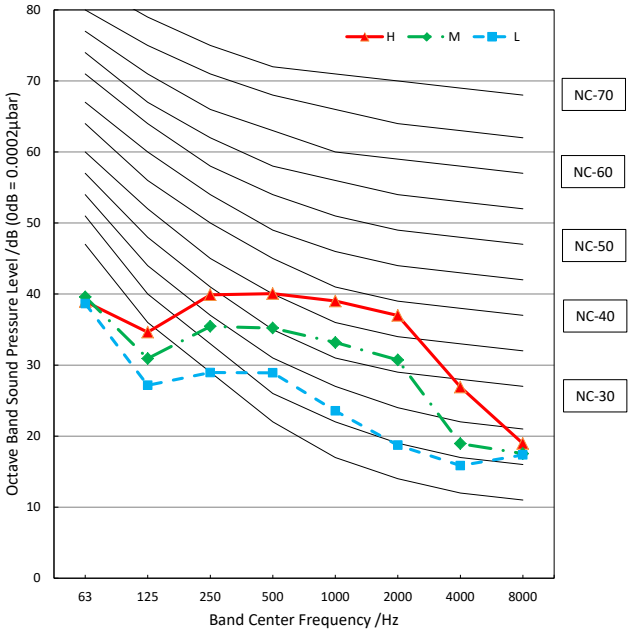

MSAFDU-24HRFNX-QRD0GW

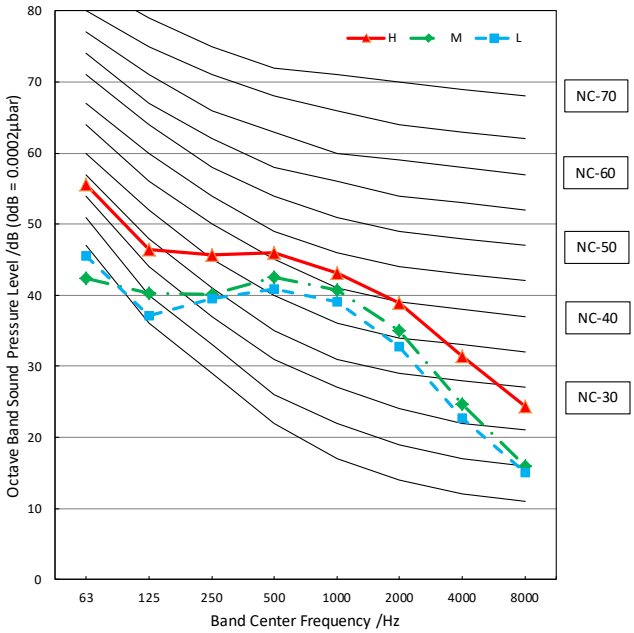

MSABAU-09HRFN8-QRD0GW

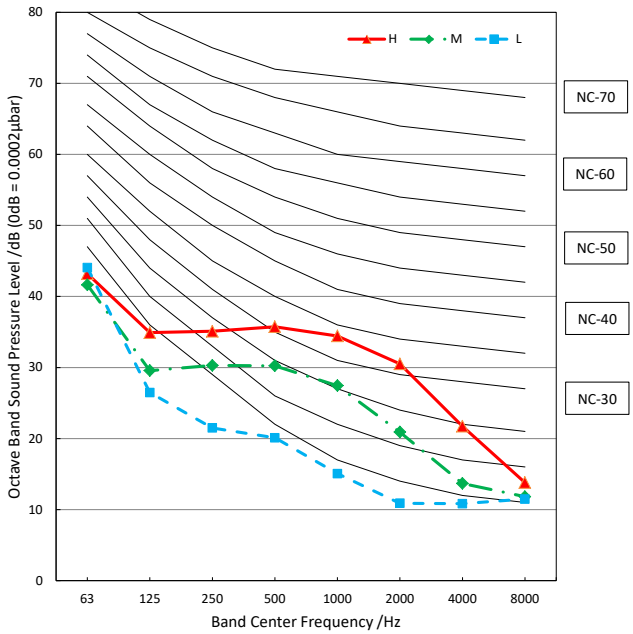

MSABBU-12HRFN8-QRD0GW

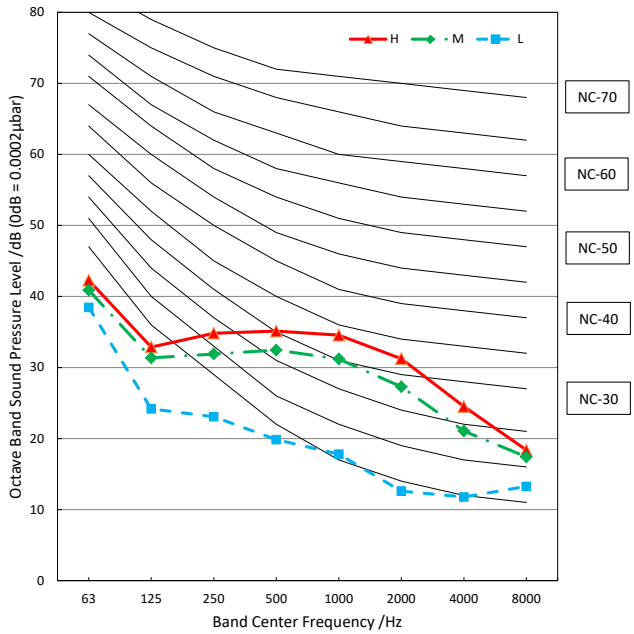

MSABDU-18HRFN8-QRD0GW

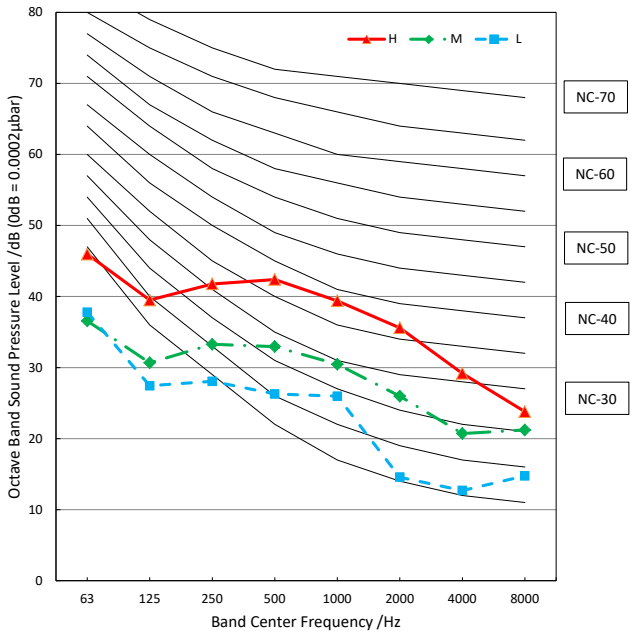

MSABEU-24HRFN8-QRD0GW

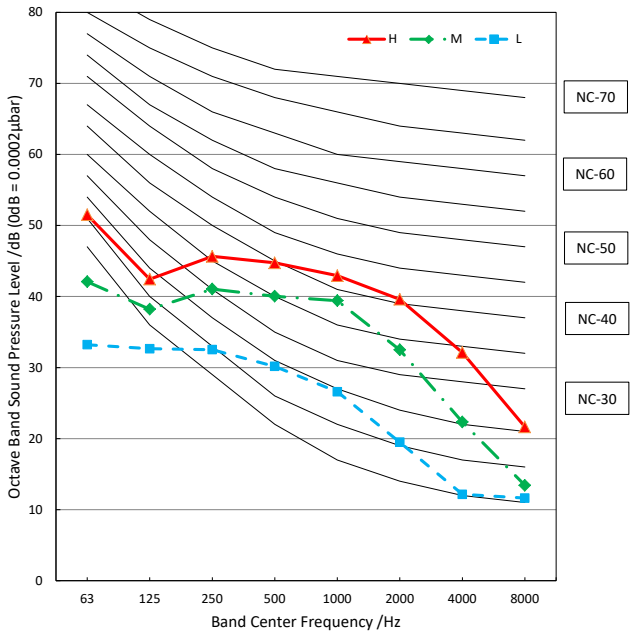

MSAEBU-09HRFN8-QRD6GW

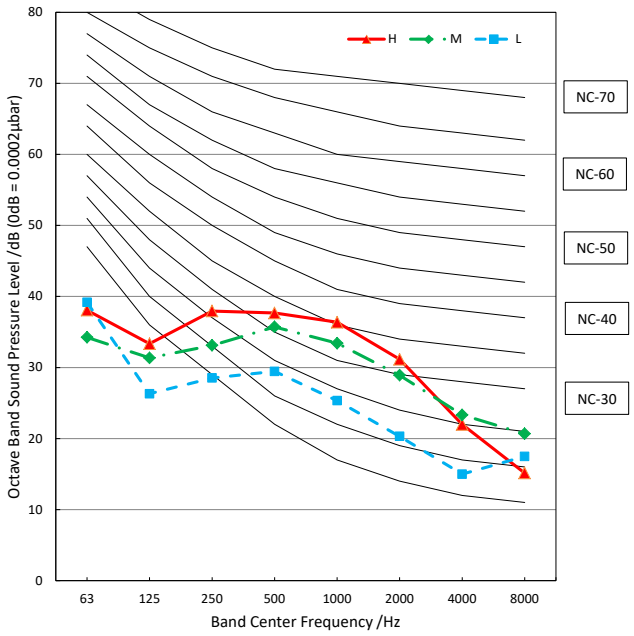

MSAEBU-12HRFN8-QRD0GW

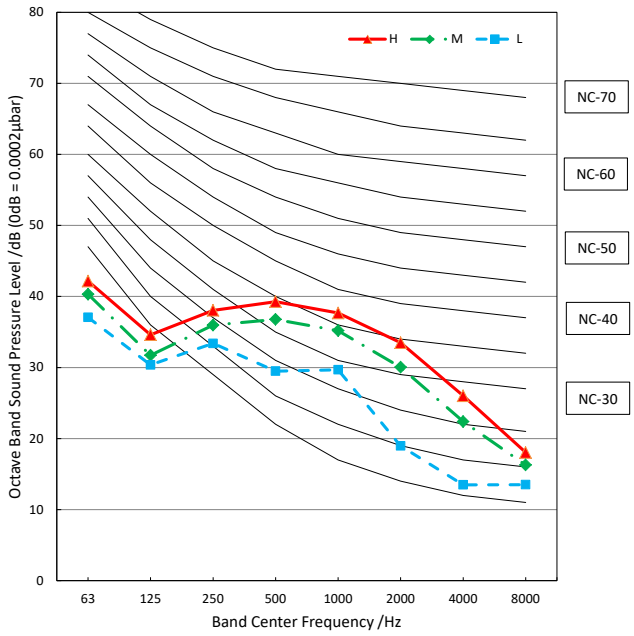

MSAECU-18HRFN8-QRD0GW

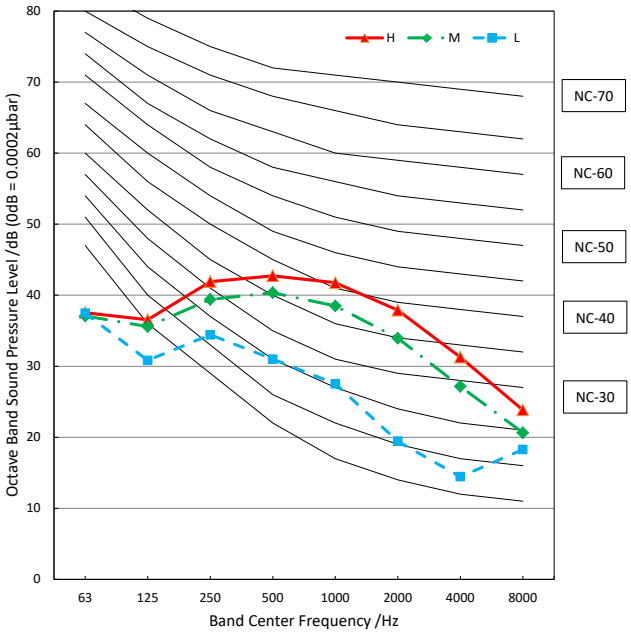

MSAEDU-24HRFN8-QRD0GW

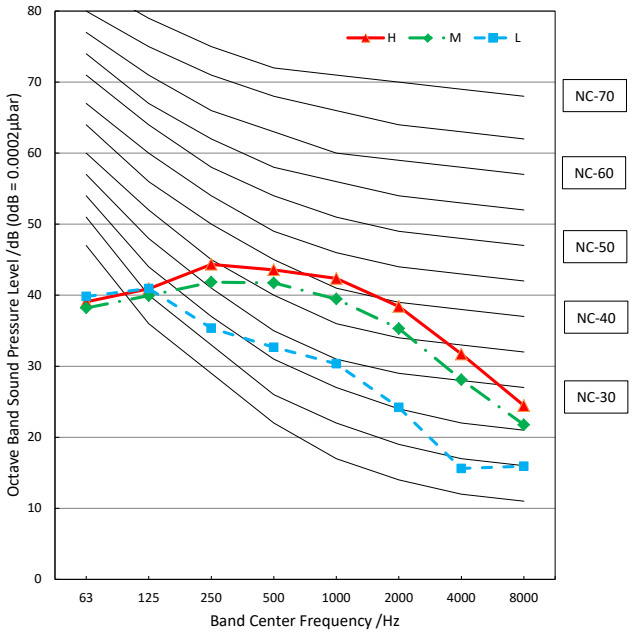

MSAGAU-09HRFNX-QRD0GW

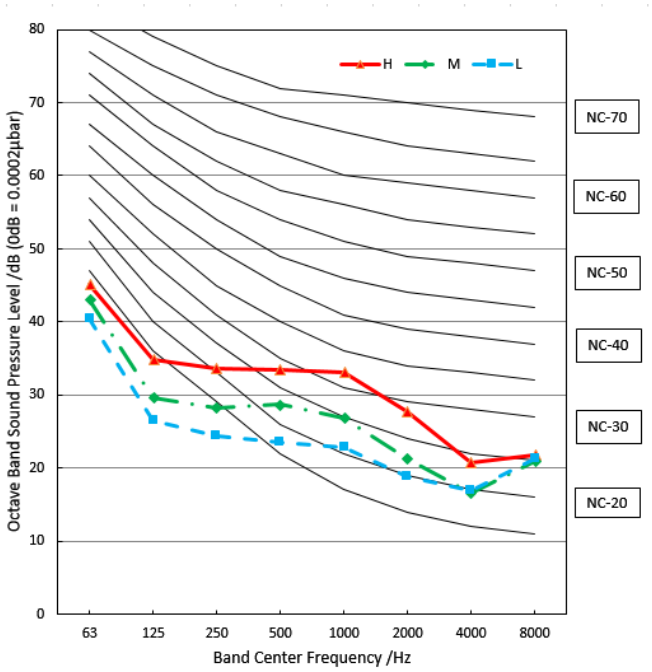

MSAGBU-09HRFN8-QRD1GW(GA)

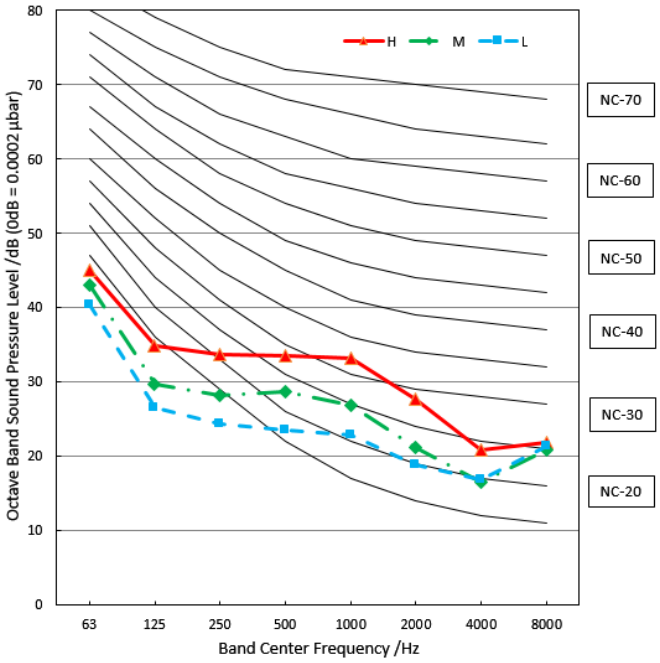

MSAGBU-12HRFN8-QRD1GW(GA)

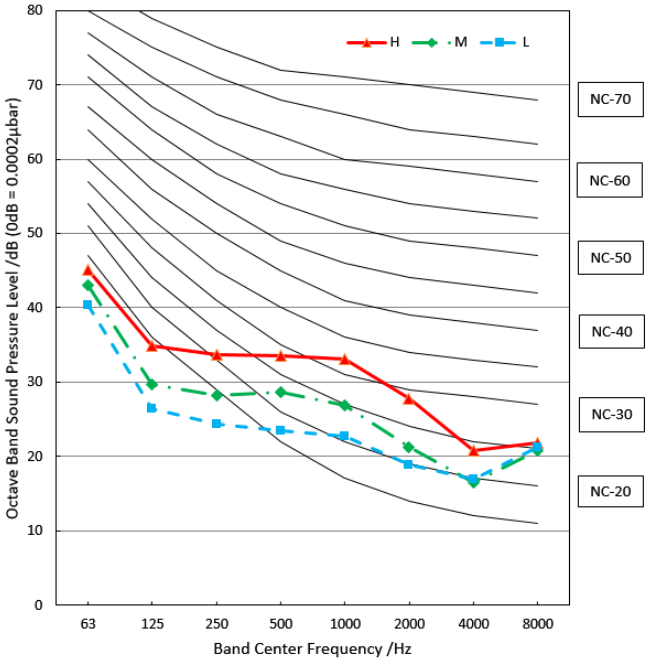

MSAGBU-12HRFNX-QRD0GW

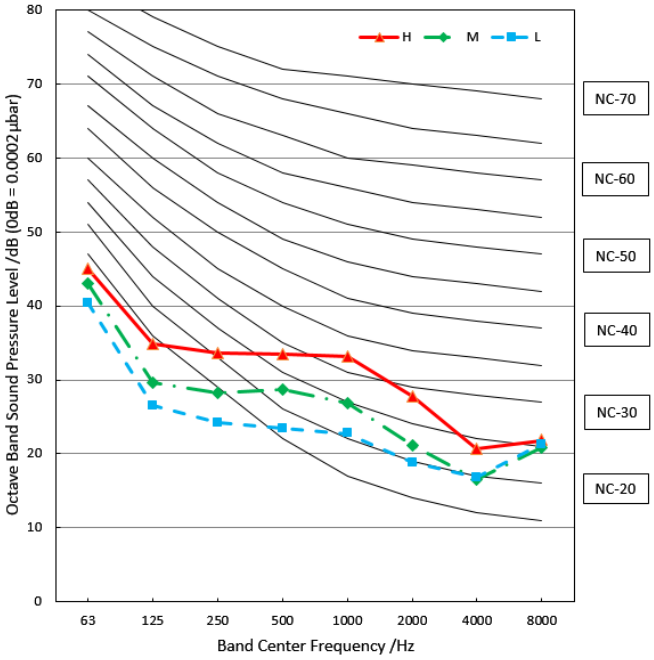

MSAGCU-18HRFNX-QRD0GW

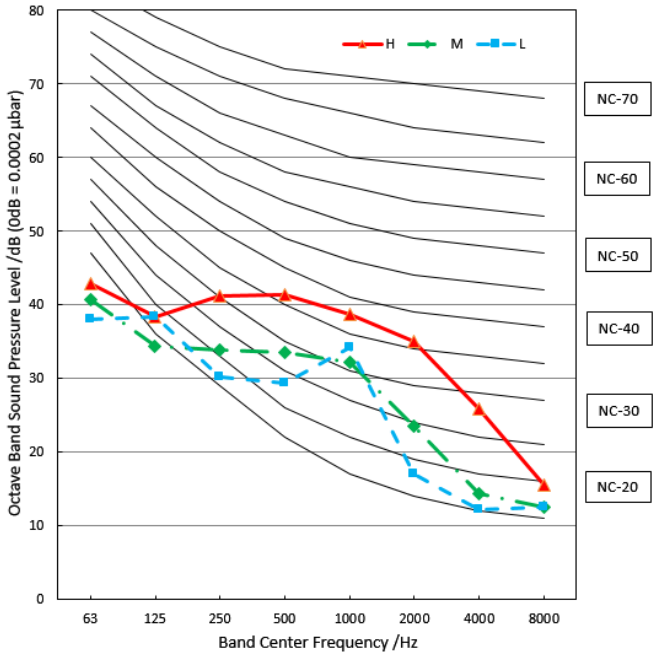

MSAGDU-24HRFN8-QRD0GW

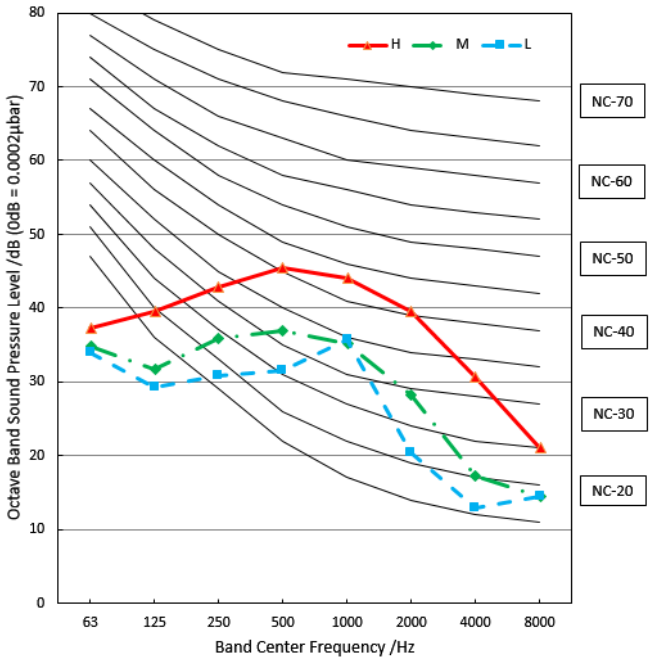

MSFAAU-09HRFN8-QRD6GW

MSFAAU-12HRFN8-QRD6GW

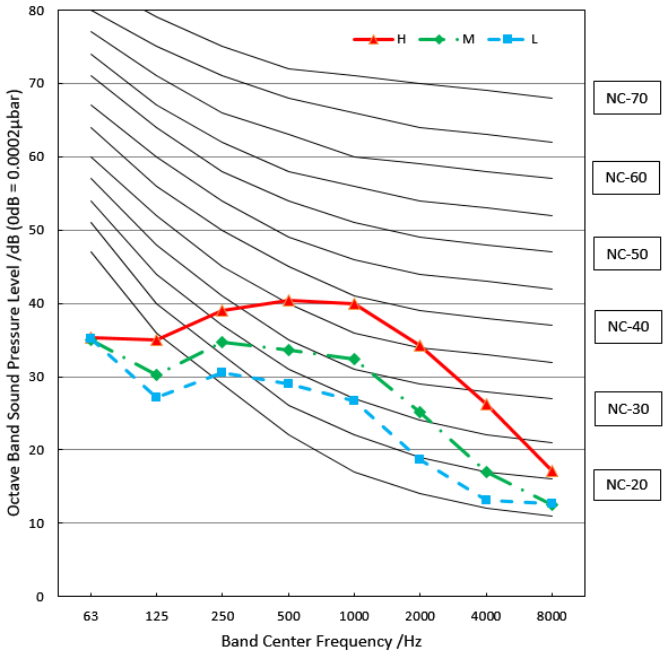

MSGPAU-09HRFN8-QRD6GW

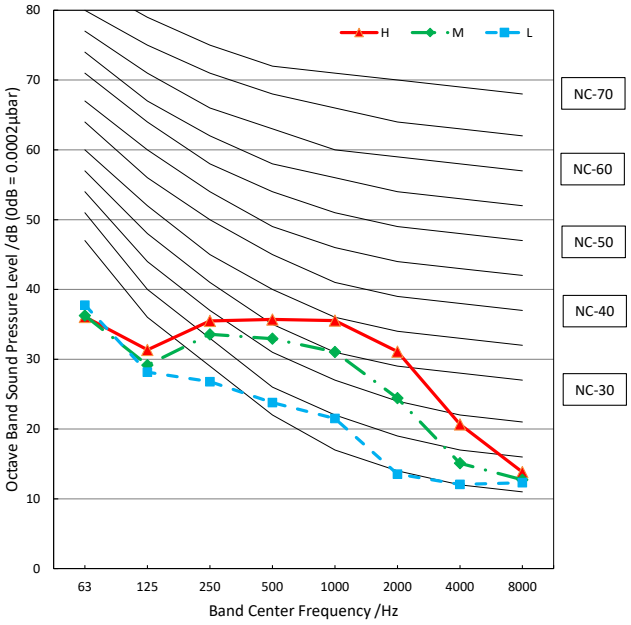

MSGPBU-12HRFN8-QRD6GW

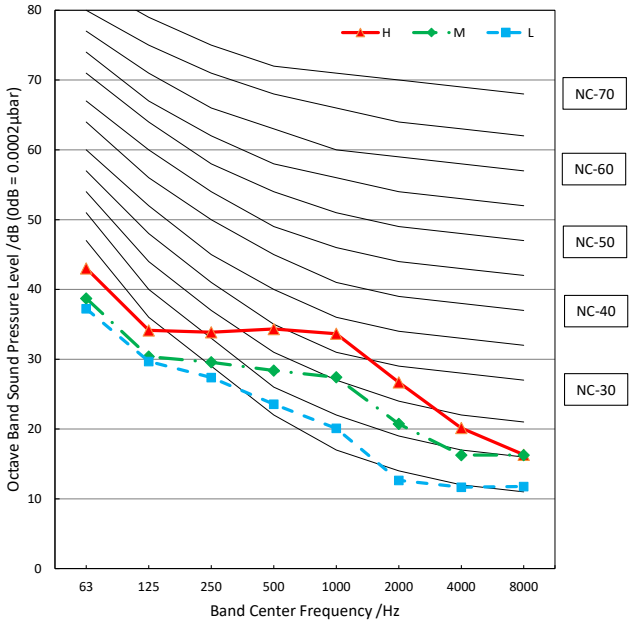

MSGPCU-18HRFN8-QRD6GW

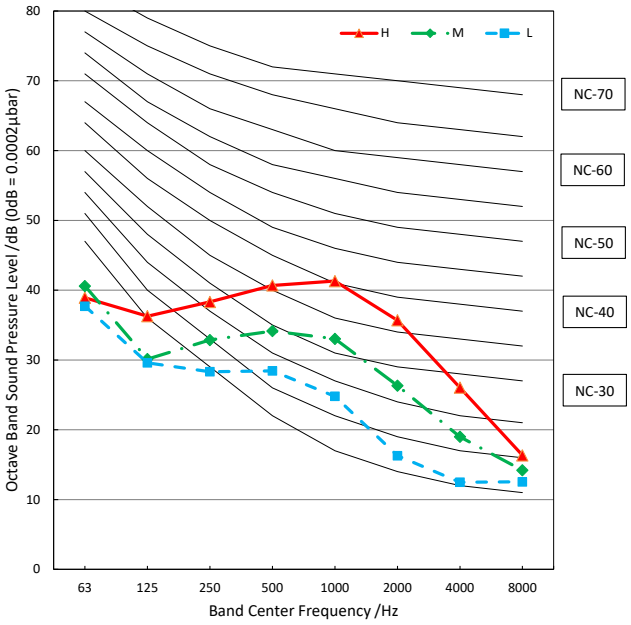

MSGPDU-24HRFN8-QRD6GW

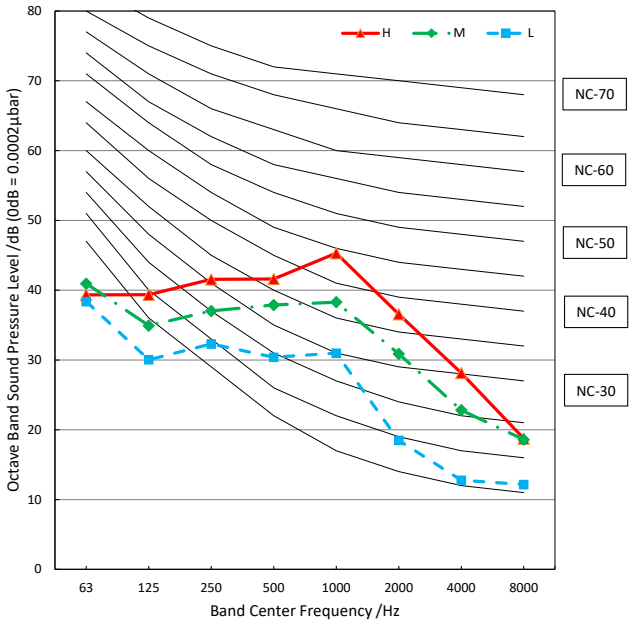

MSGPAU-07HRFN8-QRD1GW

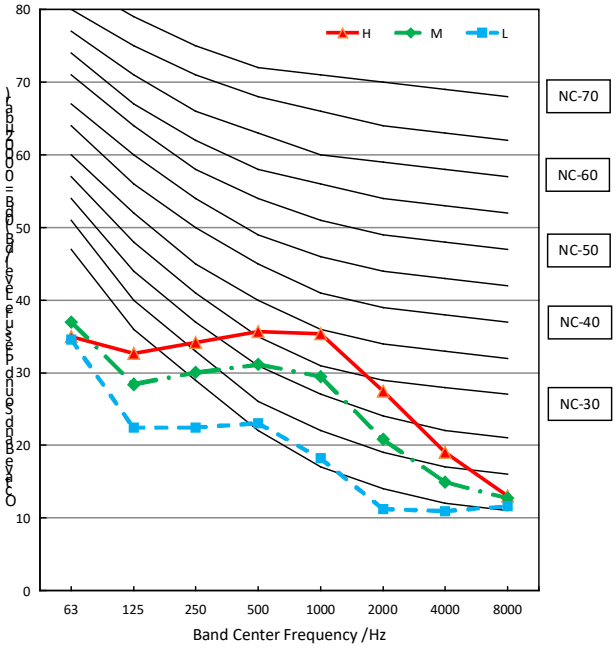

MSGPAU-09HRFN8-QRD1GW

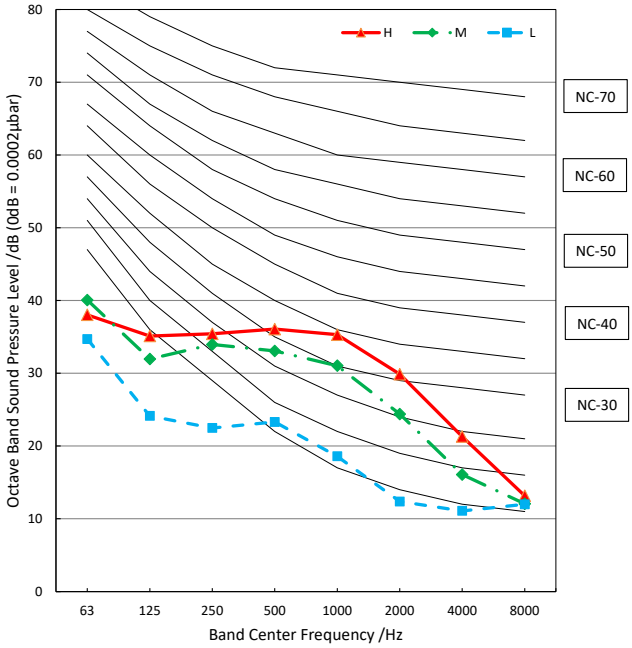

MSGPBU-12HRFN8-QRD1GW

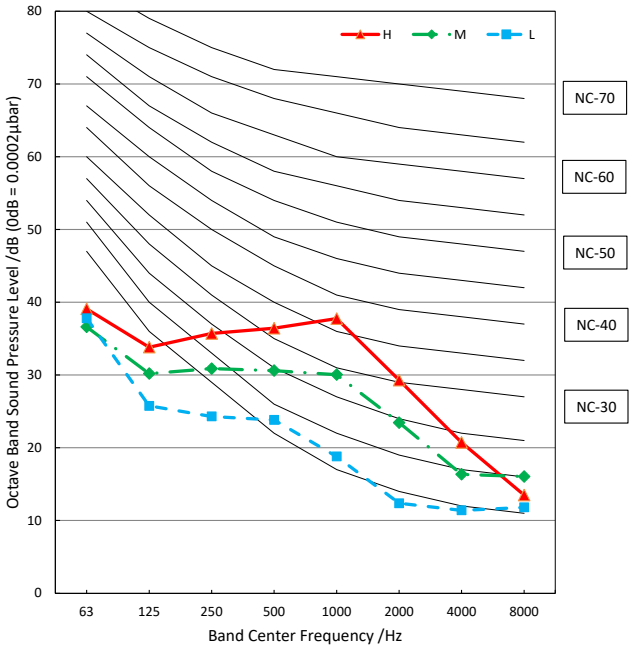

MSGPCU-18HRFN8-QRD1GW

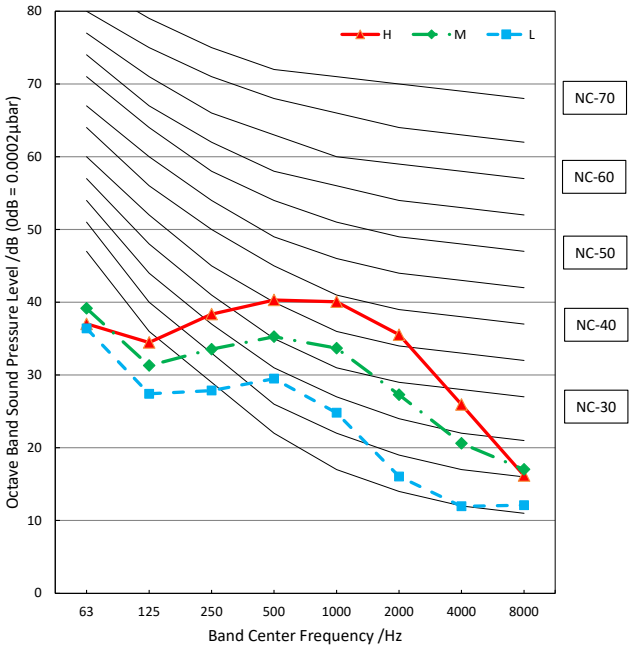

MSGPDU-24HRFN8-QRD1GW

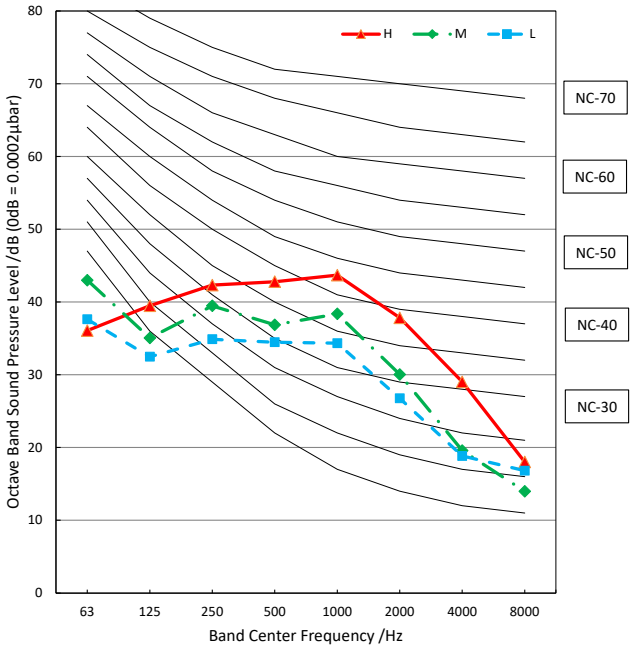

MSCB1BU -12HRFN8-QRD1GW

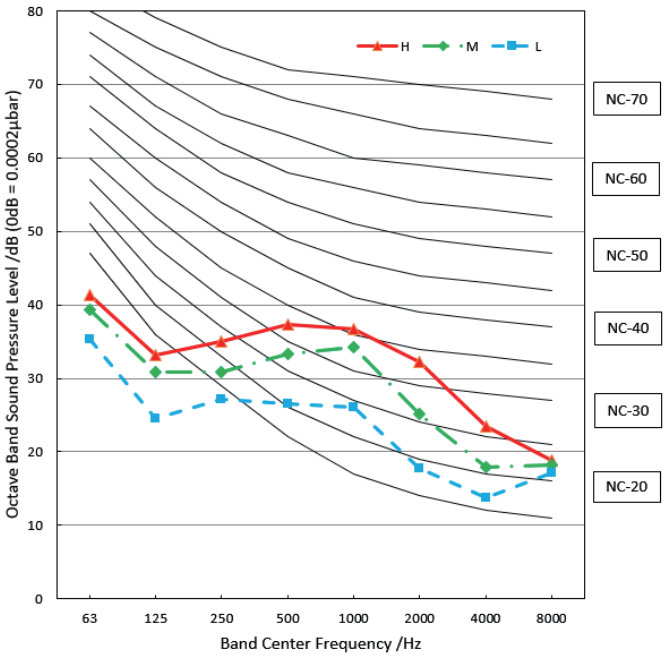

MSCB1CU-18HRFN8-QRD1GW

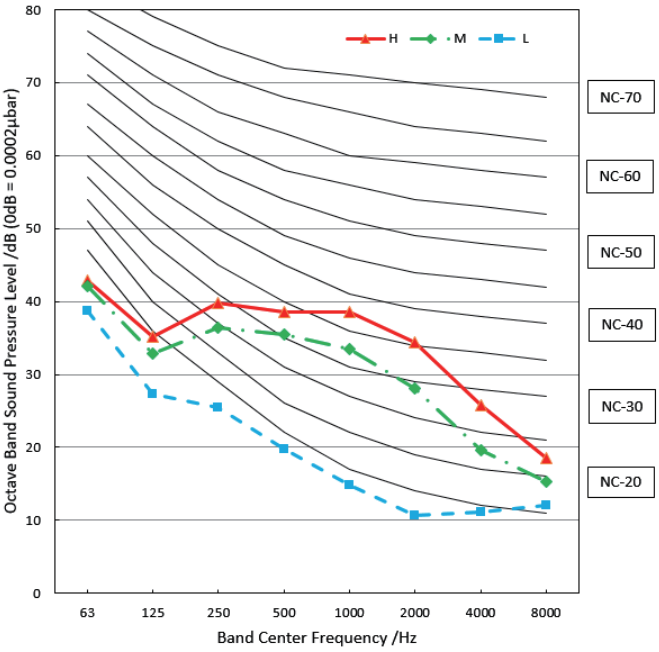

MSCB1DU-24HRFN8-QRD1GW

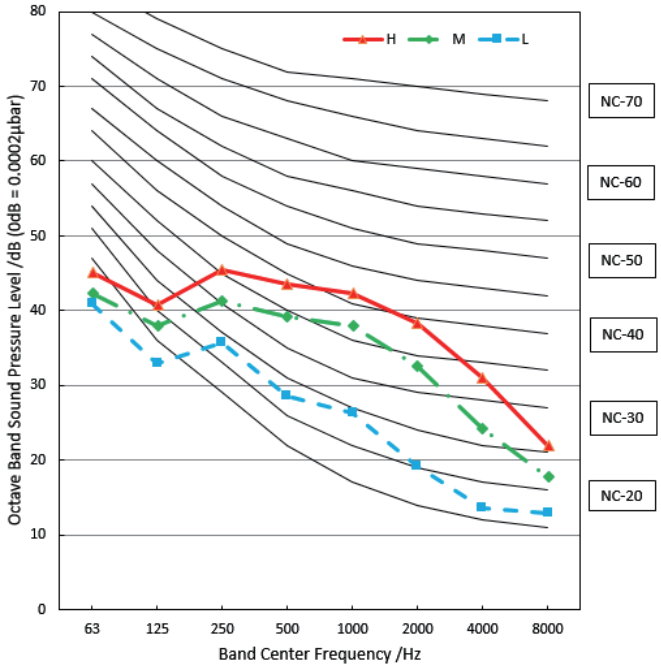

9.2 Outdoor Unit

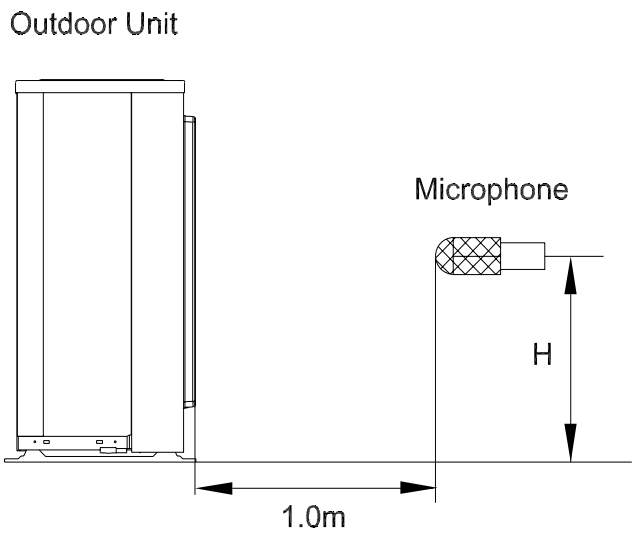

Note: H= 0.5 × height of outdoor unit

Notes:

-Sound measured at 1.0m away from the center of the unit.

-Data is valid at nominal operation condition

-Reference acoustic pressure OdB=20μPa

-Sound level will vary depending on arrange off actors such as the construction (acoustic absorption coefficient) of particular room in which the equipment is installed.

-The operating conditions are assumed to be standard.

M2OG-14HFN8-Q

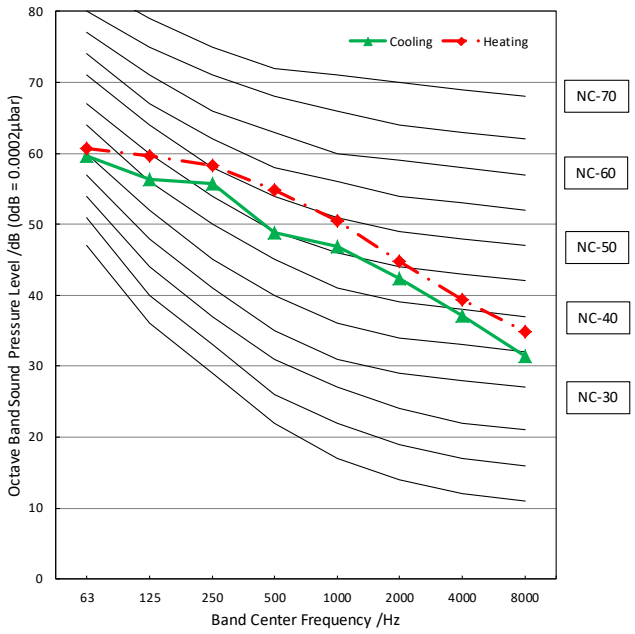

M2OC-18HFN8-Q

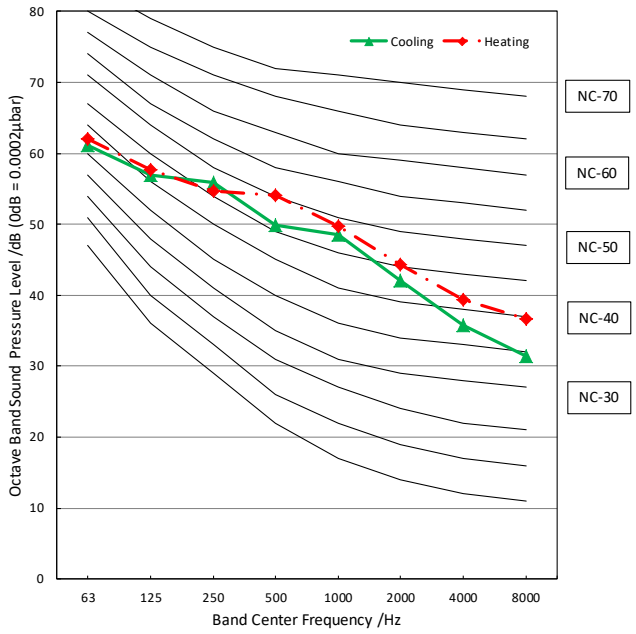

M2OD-18HFN8-Q

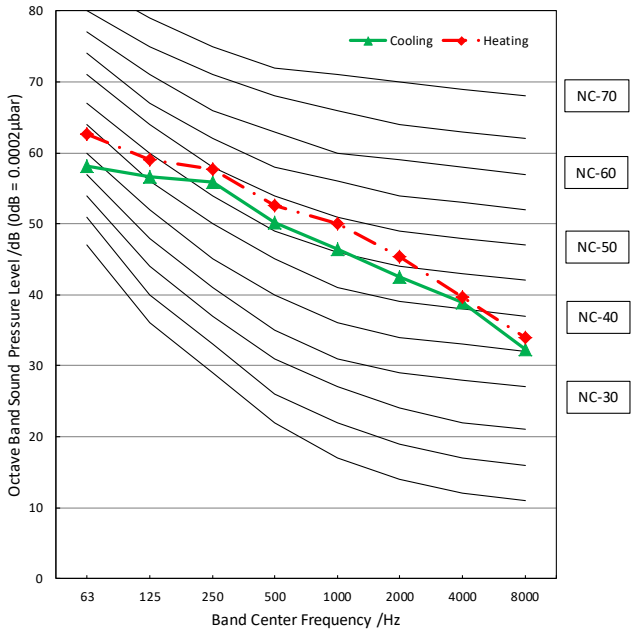

M3OF-27HFN8-Q

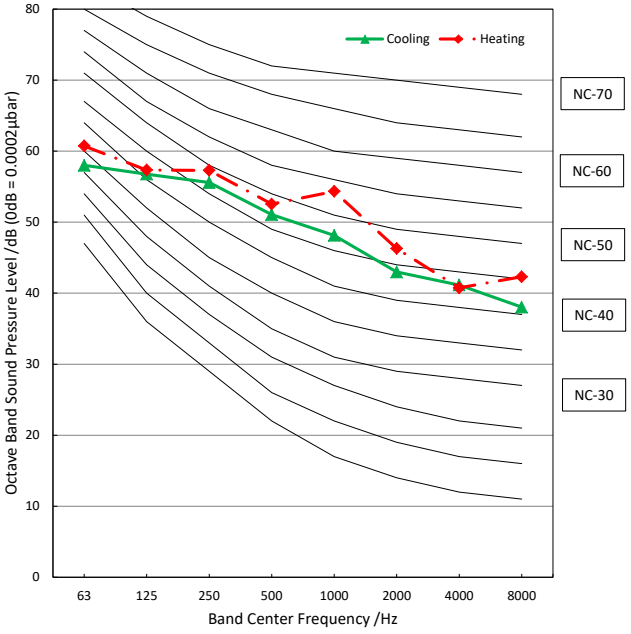

M3OF-21HFN8-Q

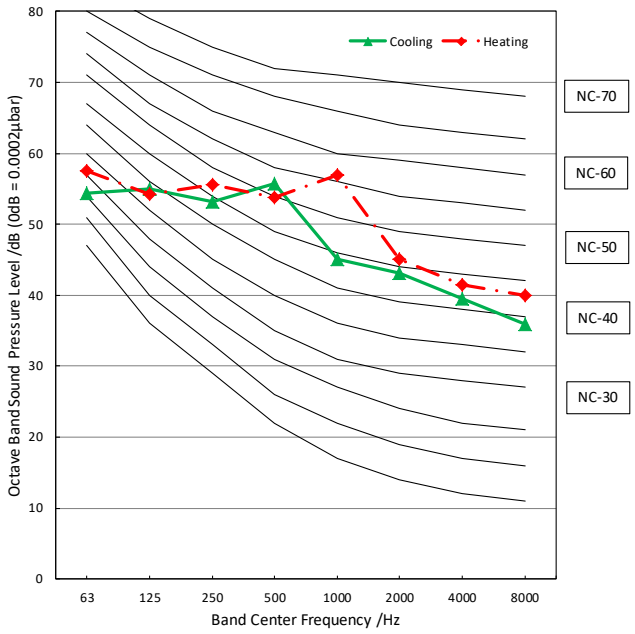

M3OE-27HFN8-Q

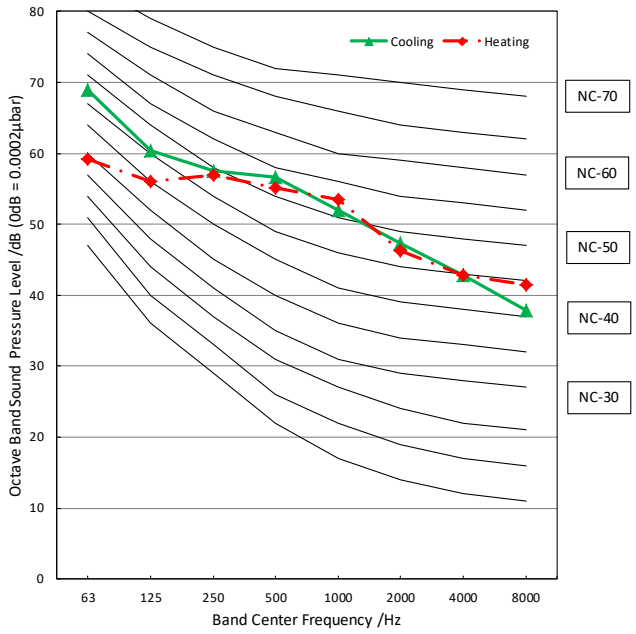

M4OE-28HFN8-Q

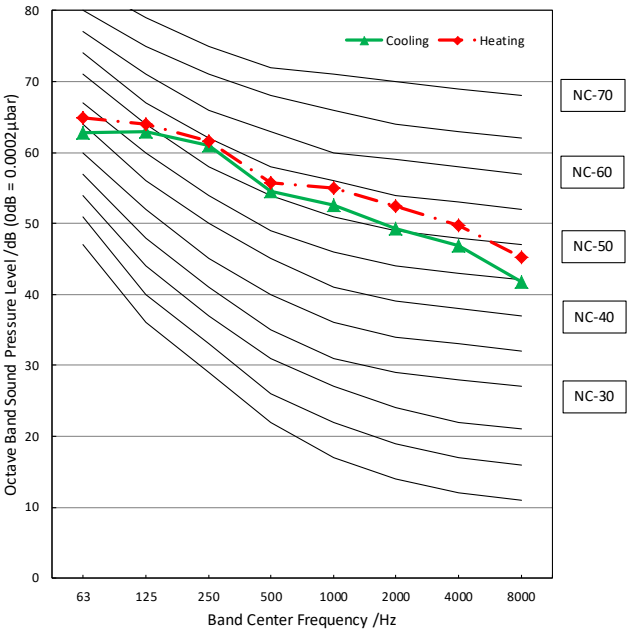

M4OB-36HFN8-Q

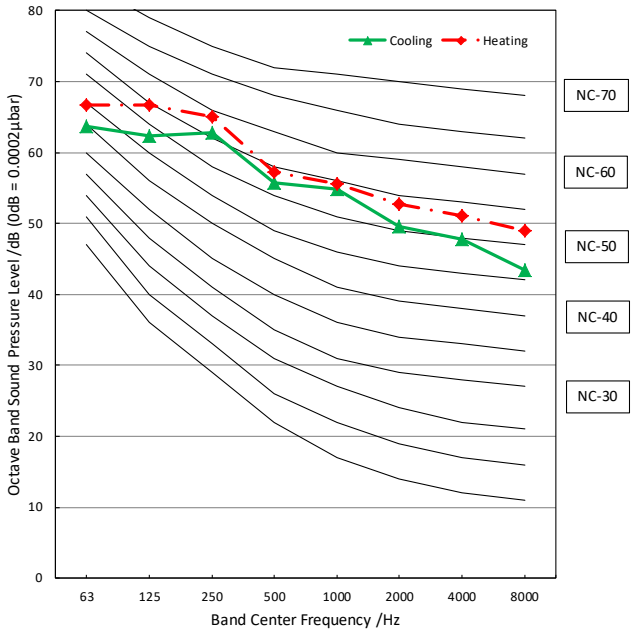

M5OD-42HFN8-Q

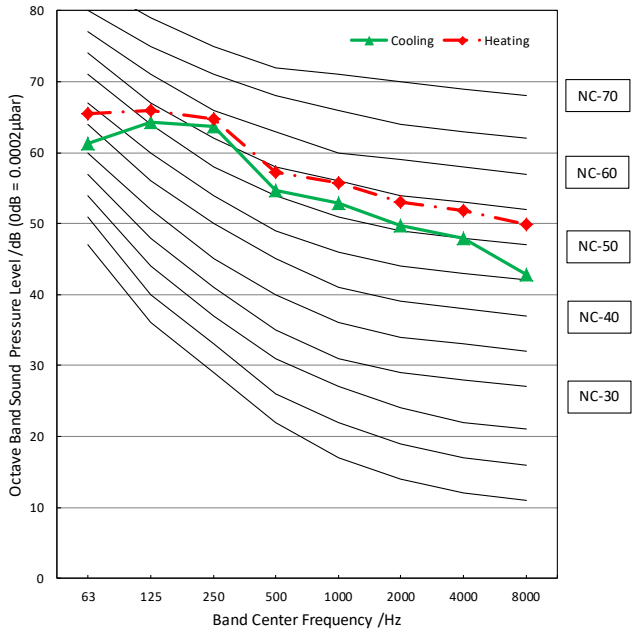

M5OE-42HFN8-Q

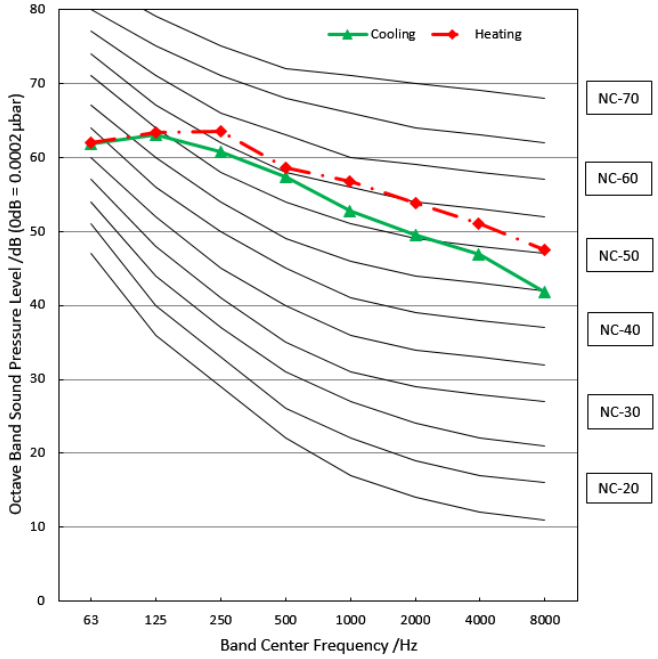

M2OH-14HFN8-Q

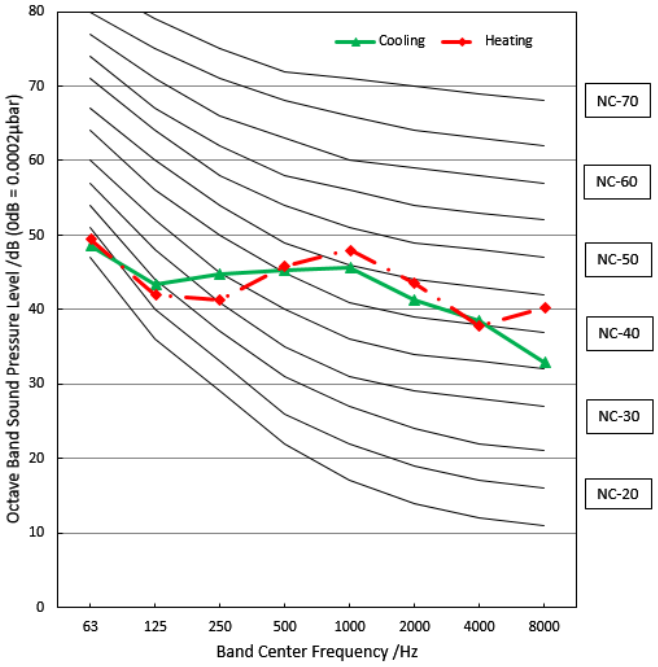

M2OE-18HFN8-Q

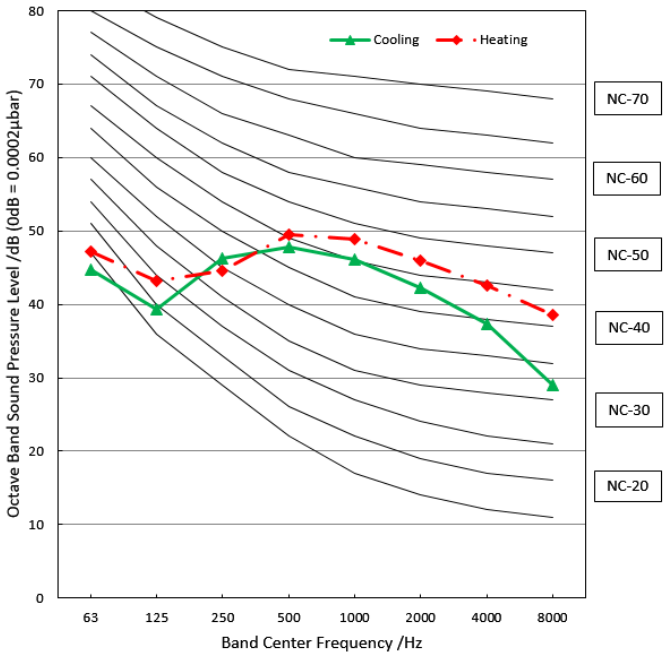

M3OA-18HFN8-Q

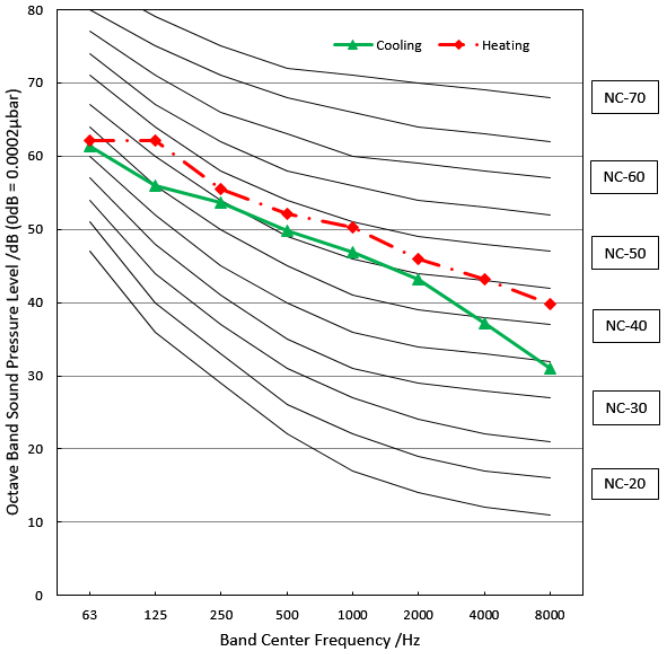

M3OG-21HFN8-Q

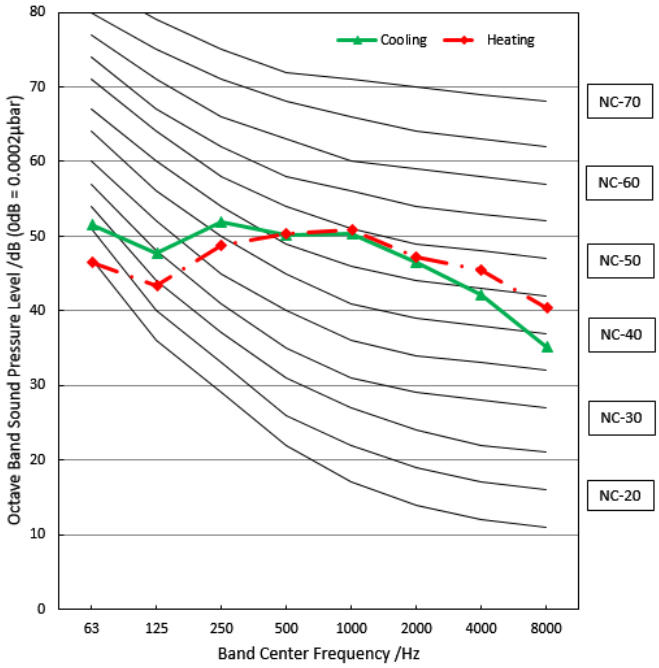

M3OA-27HFN8-Q

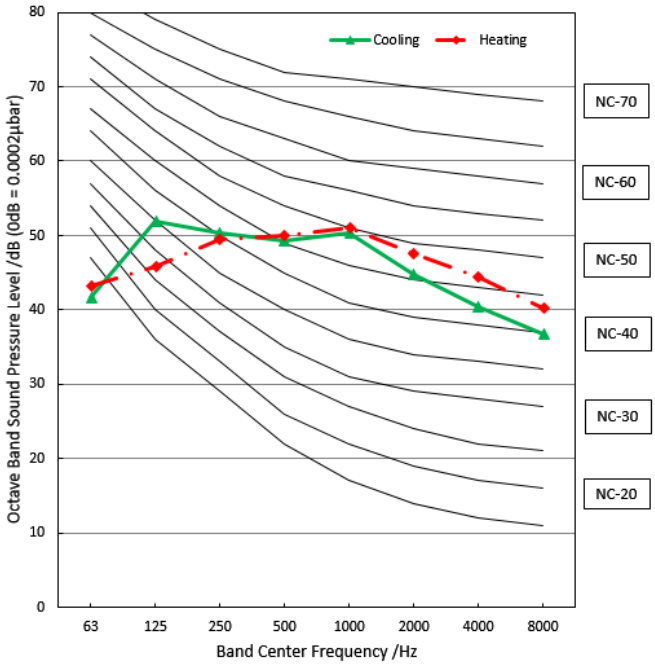

M2OF-18HFN8-Q

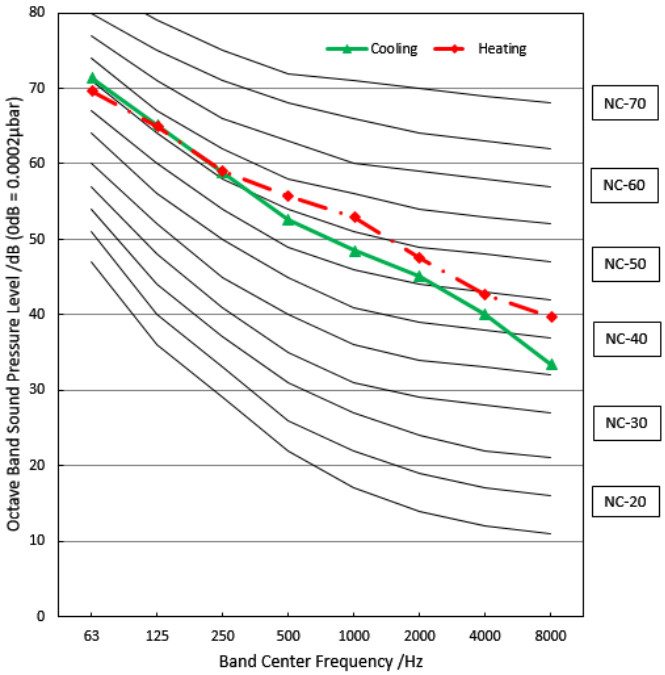

M3OB-27HFN8-Q

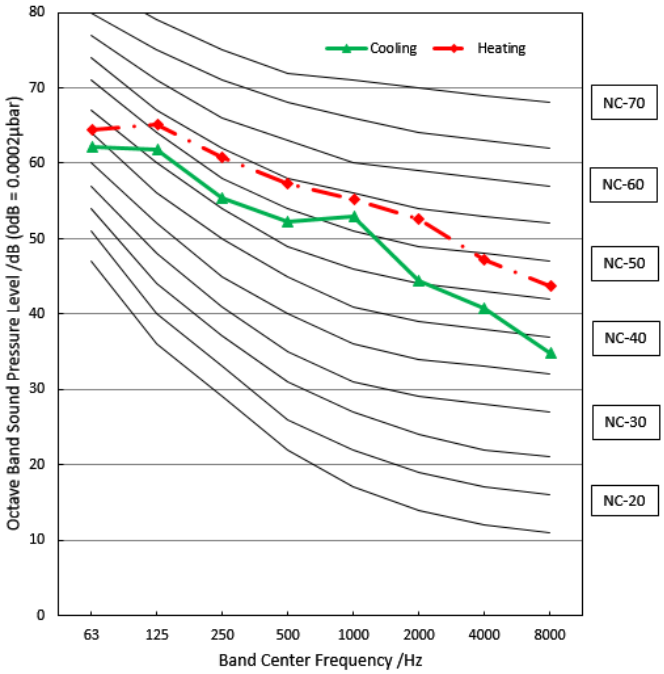

M3OC-27HFN8-Q

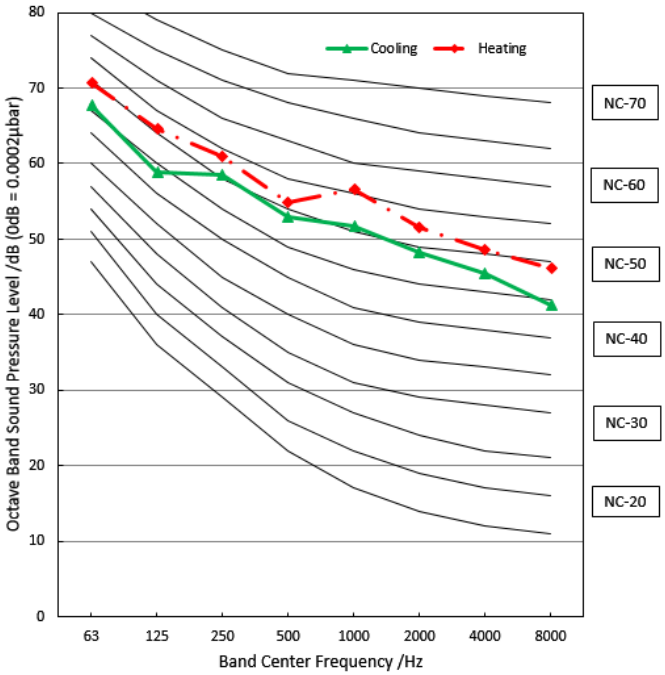

M4OC-36HFN8-Q

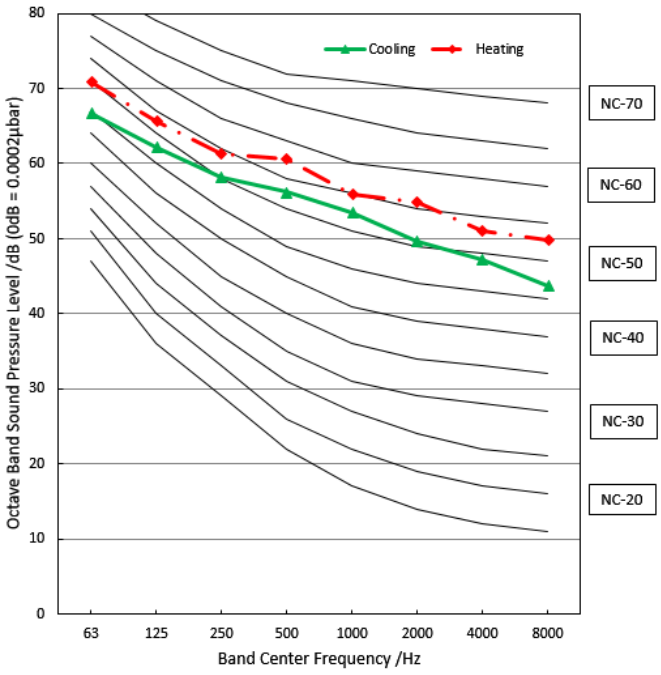

M3OA-18HFN8-Q(HRU)

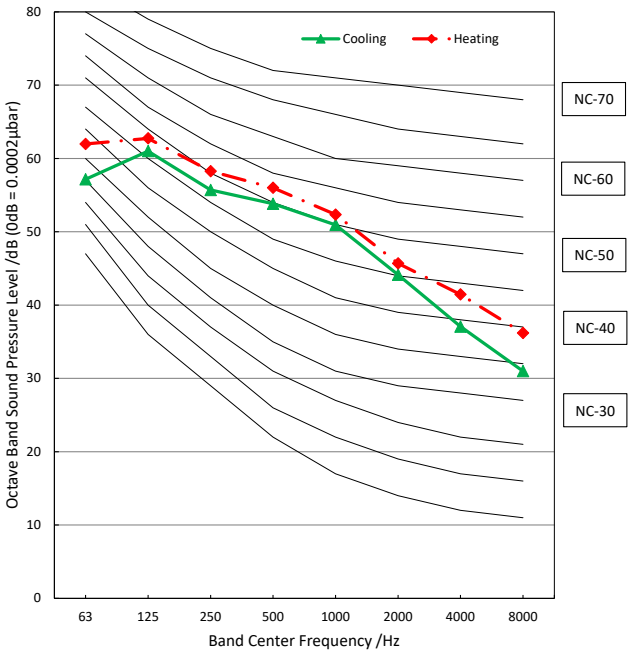

M4OA-24HFN8-Q

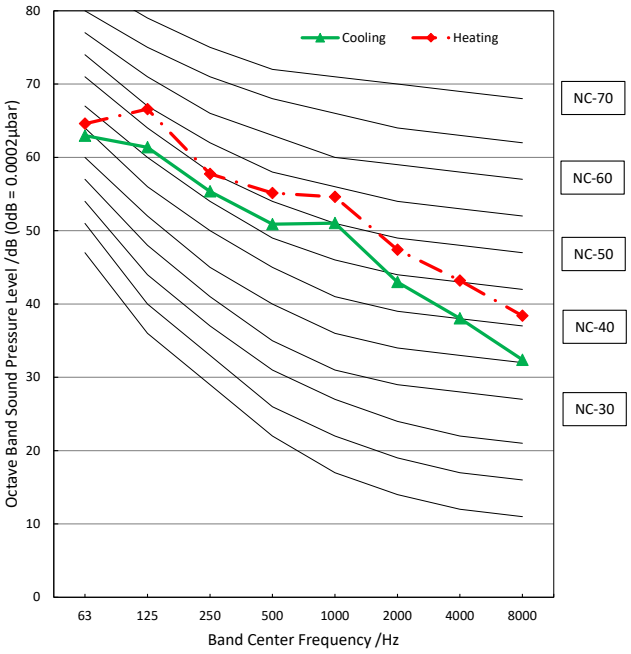

M4OA-27HFN8-Q(HRU)

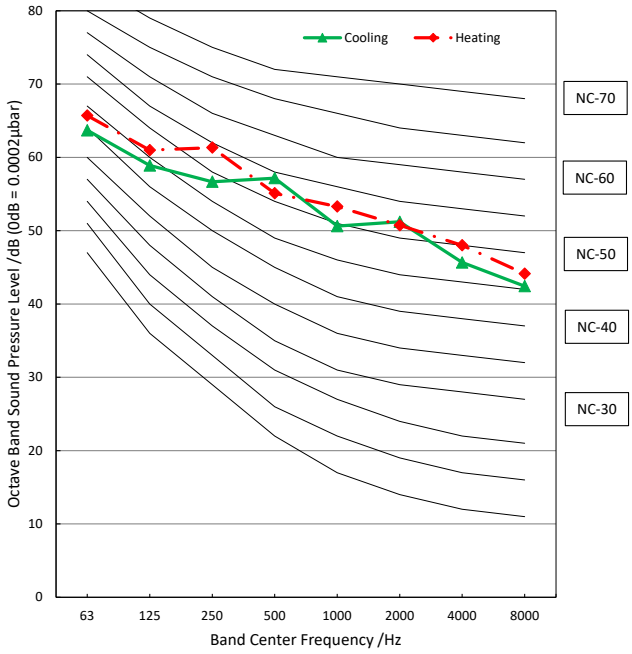

M4OB-27HFN8-Q(HRU)

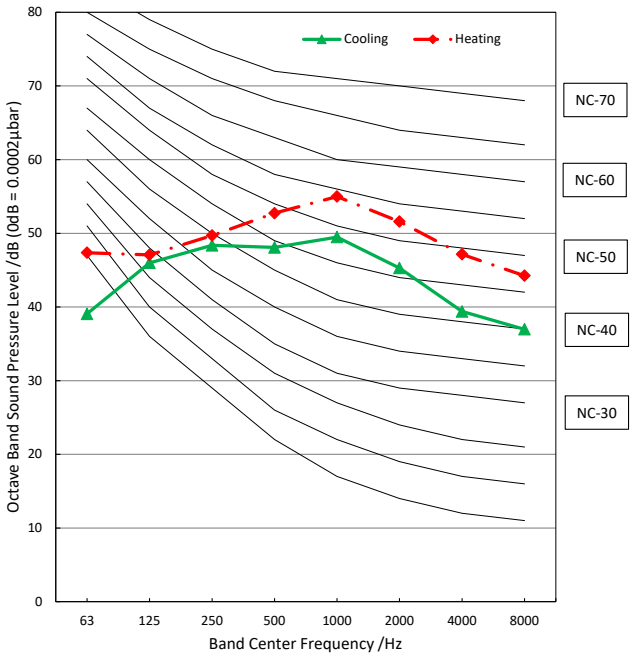

10. Electrical Characteristics

Model	Indoor Unit			Power Supply			IFM	
	Phase	Hz	Voltage	MCA	MOP	MFA	kW	FLA
MTIU-07HWFNX-QRD0W	1	50	220-240	/	/	/	0.055	1.11
MTIU-07HWFNX-QRD0W(GA)				/	/	/	0.055	1.11
MTIU-09HWFNX-QRD0W(GA)				/	/	/	0.055	1.11
MTIU-09HWFNX-QRD0W				/	/	/	0.055	1.11
MTIU-12HWFNX-QRD0W				/	/	/	0.055	1.11
MTIU-12HWFNX-QRD0W(GA)				/	/	/	0.055	1.11
MTIU-18HWFNX-QRD0W(GA)				/	/	/	0.16	1.48
MTIU-18HWFNX-QRD0W				/	/	/	0.16	1.48
MCA3I-07HRFNX-QRD0				/	/	/	0.046	0.146
MCA3U-07HRFNX-QRD0W(GA)				/	/	/	0.046	0.146
MCA3U-09HRFNX-QRD0W(GA)				/	/	/	0.046	0.146
MCA3I-09HRFN8-QRD0				/	/	/	0.046	0.146
MCA3U-12HRFNX-QRD0W				/	/	/	0.046	0.146
MCA3U-12HRFNX-QRD0W(GA)				/	/	/	0.046	0.146
MCA3U-18HRFNX-QRD0W(GA)				/	/	/	0.046	0.146
MCA3U-18HRFNX-QRD0W				/	/	/	0.046	0.146
MFA2U-09HRFNX-QRD0W(GA)				/	/	/	0.026	0.264
MFA2U-12HRFNX-QRD0W(GA)				/	/	/	0.026	0.264
MFA2U-17HRFNX-QRD0W(GA)				/	/	/	0.026	0.264
MTJ-07HWFNX-QRD1W(GA)				/	/	/	0.081	0.81
MTJ-09HWFNX-QRD1W(GA)				/	/	/	0.081	0.81
MTJ-12HWFNX-QRD1W(GA)				/	/	/	0.081	0.81
MTJ-18HWFNX-QRD1W(GA)				/	/	/	0.081	0.81
MTJ-24HWFNX-QRD1W(GA)				/	/	/	0.165	1.0
MCA4U-07HRFNX-QRD1W(GA)				/	/	/	0.045	0.327
MCA4U-09HRFNX-QRD1W(GA)				/	/	/	0.045	0.327
MCA4U-12HRFNX-QRD1W(GA)				/	/	/	0.045	0.327
MCA4U-18HRFNX-QRD1W(GA)				/	/	/	0.045	0.327
MCD1-24HRFNX-QRD0W(GA)				/	/	/	0.045	0.327

Model	Indoor Unit			Power Supply			IFM	
	Phase	Hz	Voltage	MCA	MOP	MFA	kW	FLA
MSAFBU-07HRDNX-QRD0GW	1	50	220-240	/	/	/	0.013	0.17
MSAFBU-09HRDN8-QRD0GW				/	/	/	0.013	0.17
MSAFAU-09HRFN8-QRD1GW				/	/	/	0.03	0.29
MSAFBU-12HRDN8-QRD0GW				/	/	/	0.013	0.17
MSAFBU-12HRFN8-QRD1GW				/	/	/	0.03	0.29
MSAFCU-18HRFN8-QRD0GW				/	/	/	0.03	0.148
MSAFDU-24HRFNX-QRD0GW				/	/	/	0.058	0.4
MSABAU-09HRFN8-QRD0GW				/	/	/	0.02	0.16
MSABBU-12HRFN8-QRD0GW				/	/	/	0.02	0.16
MSABDU-18HRFN8-QRD0GW				/	/	/	0.03	0.275
MSABEU-24HRFN8-QRD0GW				/	/	/	0.058	0.4
MSAEBU-09HRFN8-QRD6GW				/	/	/	0.02	0.16
MSAEBU-12HRFN8-QRD0GW				/	/	/	0.02	0.16
MSAECU-18HRFN8-QRD0GW				/	/	/	0.03	0.27
MSAEDU-24HRFN8-QRD0GW				/	/	/	0.058	0.4
MSAGAU-09HRFNX-QRD0GW				/	/	/	0.02	0.16
MSAGBU-09HRFN8-QRD1GW(GA)				/	/	/	0.013	0.047
MSAGBU-12HRFNX-QRD0GW				/	/	/	0.013	0.047
MSAGBU-12HRFN8-QRD1GW(GA)				/	/	/	0.013	0.047
MSAGCU-18HRFNX-QRD0GW				/	/	/	0.03	0.275
MSAGDU-24HRFN8-QRD0GW				/	/	/	0.058	0.4
MSFAAU-09HRFN8-QRD6GW				/	/	/	0.02	0.16
MSFAAU-12HRFN8-QRD6GW				/	/	/	0.02	0.16
MSGPAU-07HRFN8-QRD1GW				/	/	/	0.031	0.218
MSGPAU-09HRFN8-QRD6GW				/	/	/	0.03	0.29
MSGPAU-09HRFN8-QRD1GW				/	/	/	0.03	0.29
MSGPBU-12HRFN8-QRD6GW				/	/	/	0.03	0.29
MSGPBU-12HRFN8-QRD1GW				/	/	/	0.03	0.29
MSGPCU-18HRFN8-QRD6GW				/	/	/	0.035	0.31
MSGPCU-18HRFN8-QRD1GW				/	/	/	0.035	0.31
MSGPDU-24HRFN8-QRD6GW				/	/	/	0.058	0.52
MSGPDU-24HRFN8-QRD1GW				/	/	/	0.058	0.52
MSCB1BU-09HRFN8-QRD1GW				/	/	/	0.02	0.16
MSCB1BU-12HRFN8-QRD1GW				/	/	/	0.02	0.16
MSCB1CU-18HRFN8-QRD1GW				/	/	/	0.03	0.34
MSCB1DU-24HRFN8-QRD1GW				/	/	/	0.058	0.9

Model	Outdoor Unit			Power Supply		Compressor		OFM		
	Phase	Hz	Voltage	MCA	MFA	MSC	RLA	Qty	kW	FLA
M2OG-14HFN8-Q	1	50	220-240	11.5	20	-	7.5	1	0.034	0.39
M2OC-18HFN8-Q				12	20	-	7.1	1	0.04	0.7
M2OD-18HFN8-Q				13	20	-	7.5	1	0.058	0.39
M3OA-18HFN8-Q				12	20	-	7.15	1	0.034	0.73
M3OF-21HFN8-Q				15.5	20	-	7.5	1	0.05	0.55
M3OE-27HFN8-Q				15	30	-	9.4	1	0.05	0.55
M3OF-27HFN8-Q				17.5	22	-	9.45	1	0.05	0.55
M4OE-28HFN8-Q				19	30	-	9.45	1	0.12	1.21
M4OB-36HFN8-Q				21.5	30	-	5.38	1	0.12	1.39
M5OD-42HFN8-Q				22	30	-	5.38	1	0.12	1.39
M5OE-42HFN8-Q				22	30	-	5.38	1	0.12	1.39
M2OH-14HFN8-Q				12	20	-	7.15	1	0.034	0.89
M2OE-18HFN8-Q				13	20	-	7.15	1	0.034	0.89
M3OG-21HFN8-Q				17	20	-	7.15	1	0.08	0.88
M3OA-27HFN8-Q				18	30	-	9.45	1	0.08	0.88
M2OF-18HFN8-Q				13	20	-	7.15	1	0.08	0.88
M3OB-27HFN8-Q				18	30	-	9.45	1	0.08	0.88
M3OC-27HFN8-Q				18	30	-	6.8	1	0.12	1.21
M4OC-36HFN8-Q				21.5	30	-	5.38	1	0.12	1.21
M3OA-18HFN8-Q(HRU)				12	20	-	8.1	1	0.08	0.82
M4OA-24HFN8-Q				21.5	30	-	9.3	1	0.08	0.82
M4OA-27HFN8-Q(HRU)				19	30	-	9.3	1	0.12	1.21
M4OB-27HFN8-Q(HRU)				19	30		9.3	1	0.12	1.35

Notes:

MCA: Minimum Circuit Amperes (A)

MFA: Maximum Fuse Amperes (A)

MSC: Maximum Starting Current

RLA: Rated Load Amperes (A)

IFM: Indoor Fan Motor

OFM: Outdoor Fan Motor

FLA: Full Load Amperes (A)

kW: Fan motor rated output(kW)

11. Static Pressure

7K/9K

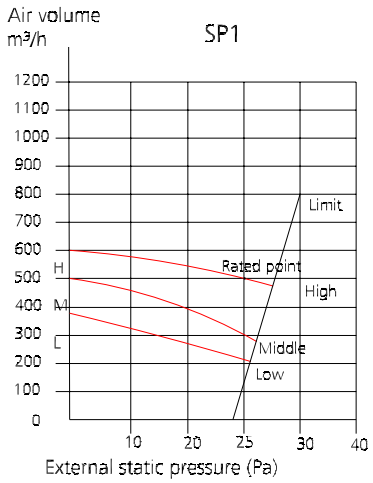

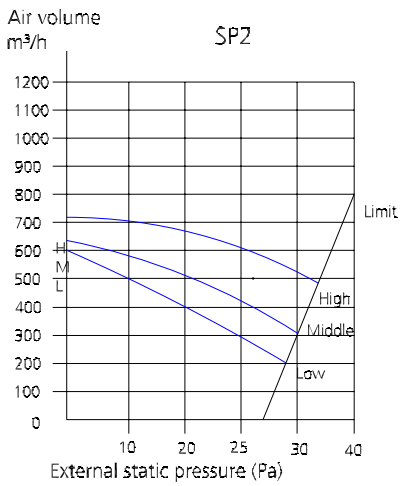

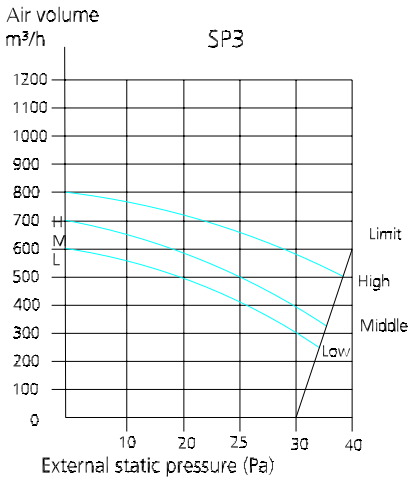

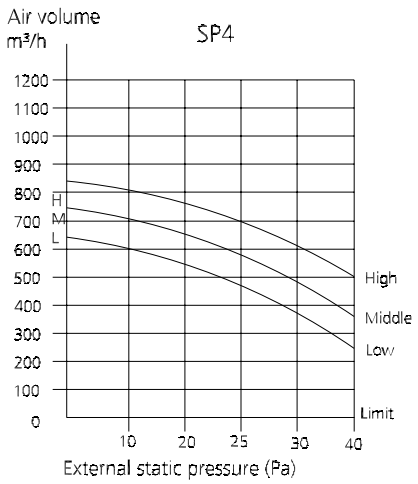

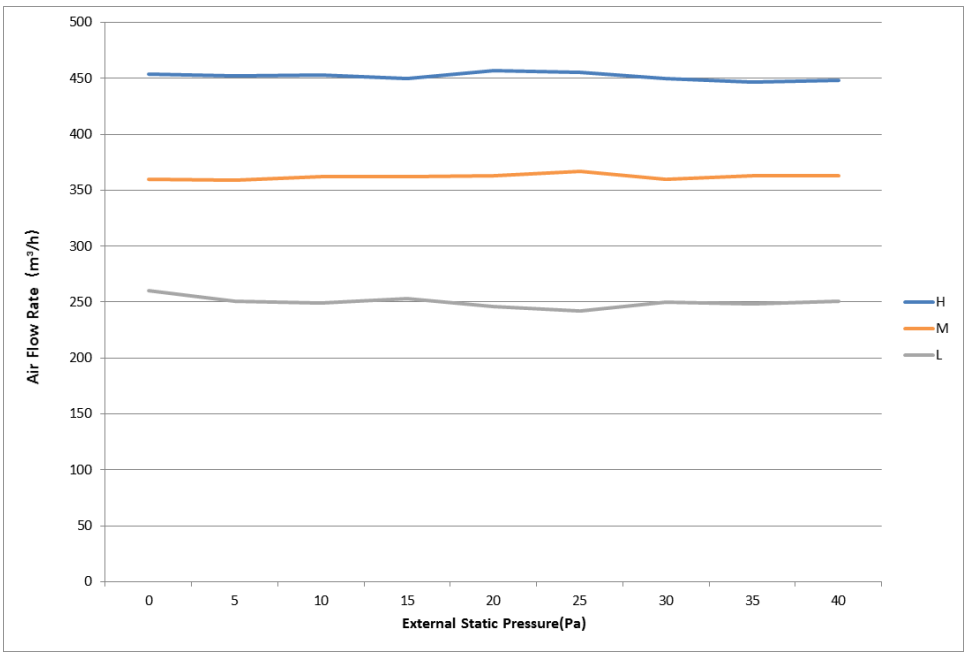

12K

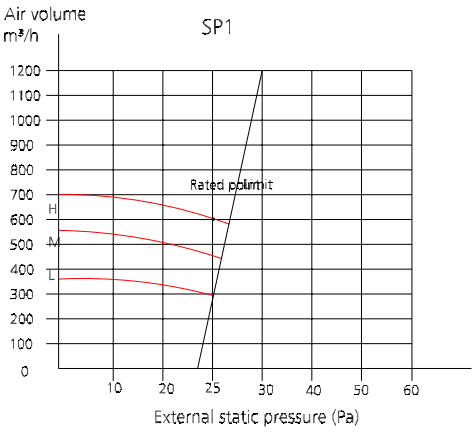
Air volume
m³/h
SP1
1200
1100
1000
900
800
700
600
500
400
300
200
100
0
H
M
L
Rated point
Limit
10
20
25
30
40
50
60
External static pressure (Pa)

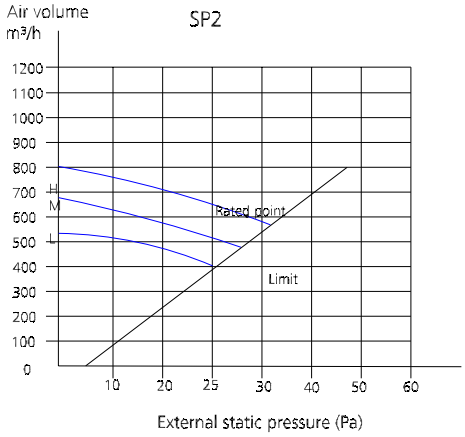
Air volume
m³/h
SP2
1200
1100
1000
900
800
700
600
500
400
300
200
100
0
H
M
L
Rated point
Limit
10
20
25
30
40
50
60
External static pressure (Pa)

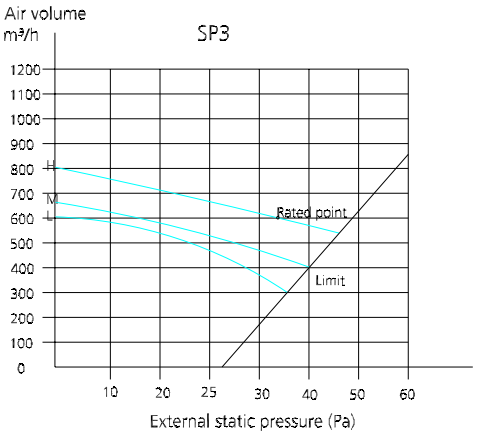
Air volume
m³/h
SP3
1200
1100
1000
900
800
700
600
500
400
300
200
100
0
H
M
L
Rated point
Limit
10
20
25
30
40
50
60
External static pressure (Pa)

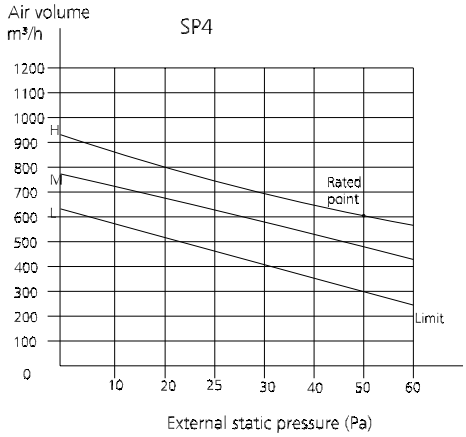
Air volume
m³/h
SP4
1200
1100
1000
900
800
700
600
500
400
300
200
100
0
H
M
L
Rated point
Limit
10
20
25
30
40
50
60
External static pressure (Pa)

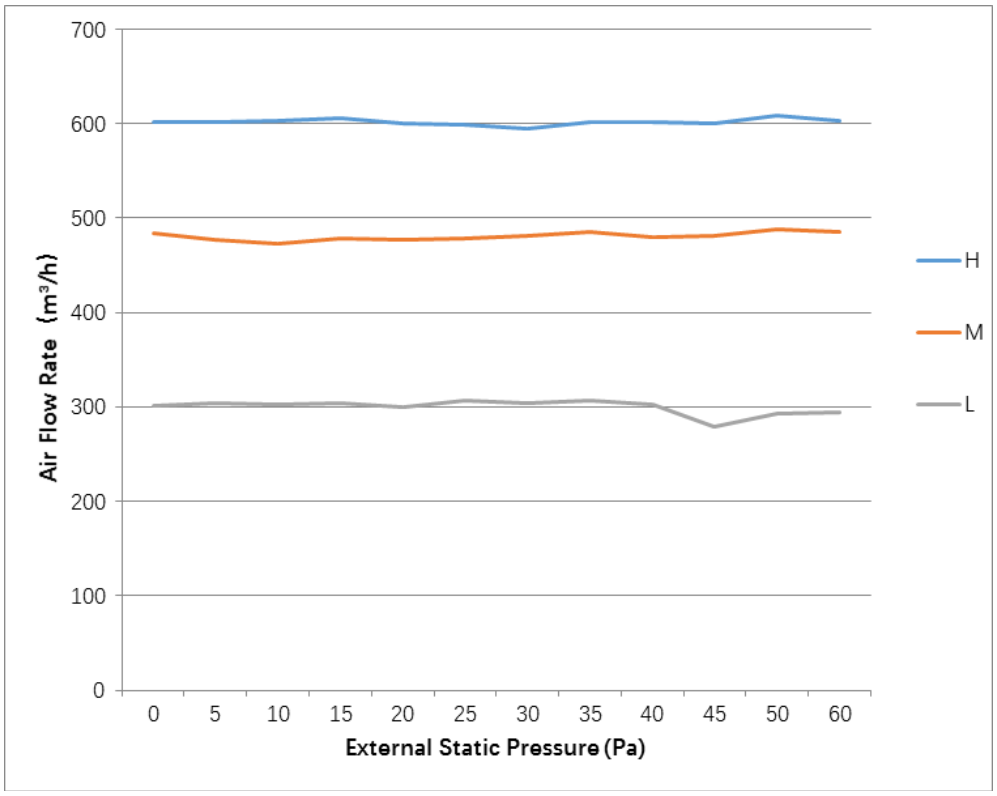
700
600
500
400
300
200
100
0
Air Flow Rate (m³/h)
0
5
10
15
20
25
30
35
40
45
50
60
External Static Pressure (Pa)
H
M
L

18K

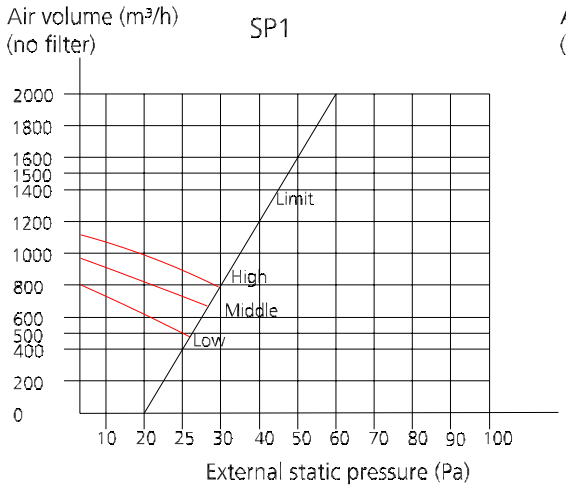
Air volume (m³/h)
(no filter)
SP1
2000
1800
1600
1500
1400
1200
1000
800
600
500
400
200
0
Limit
High
Middle
Low
10 20 25 30 40 50 60 70 80 90 100
External static pressure (Pa)

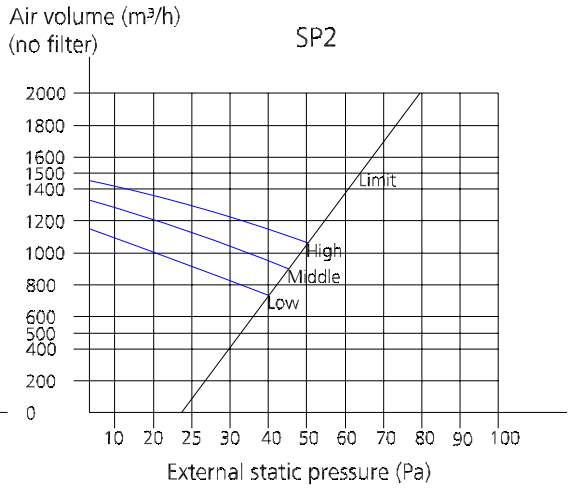
Air volume (m³/h)
(no filter)
SP2
2000
1800
1600
1500
1400
1200
1000
800
600
500
400
200
0
Limit
High
Middle
Low
10 20 25 30 40 50 60 70 80 90 100
External static pressure (Pa)

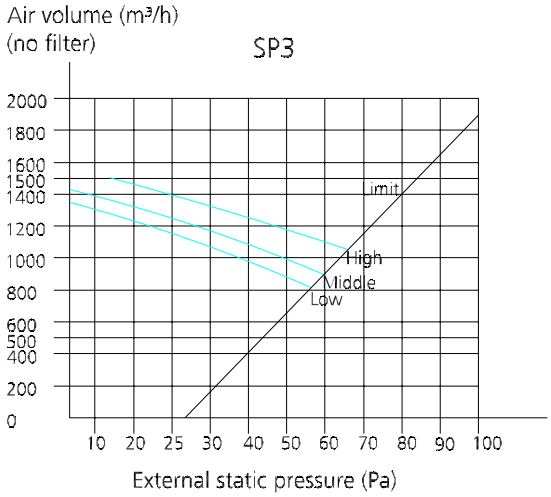
Air volume (m³/h)
(no filter)
SP3
2000
1800
1600
1500
1400
1200
1000
800
600
500
400
200
0
Limit
High
Middle
Low
10 20 25 30 40 50 60 70 80 90 100
External static pressure (Pa)

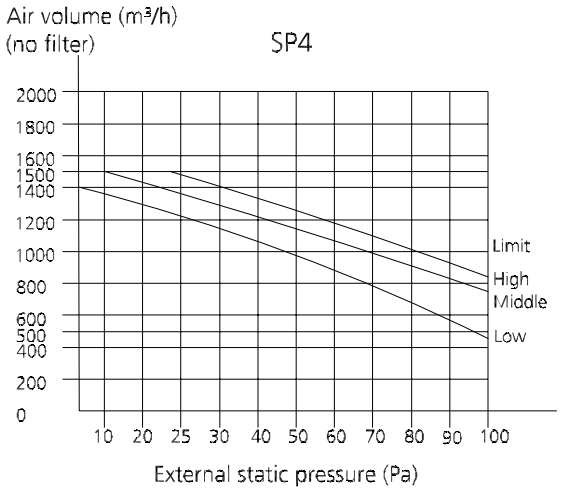
Air volume (m³/h)
(no filter)
SP4
2000
1800
1600
1500
1400
1200
1000
800
600
500
400
200
0
Limit
High
Middle
Low
10 20 25 30 40 50 60 70 80 90 100
External static pressure (Pa)

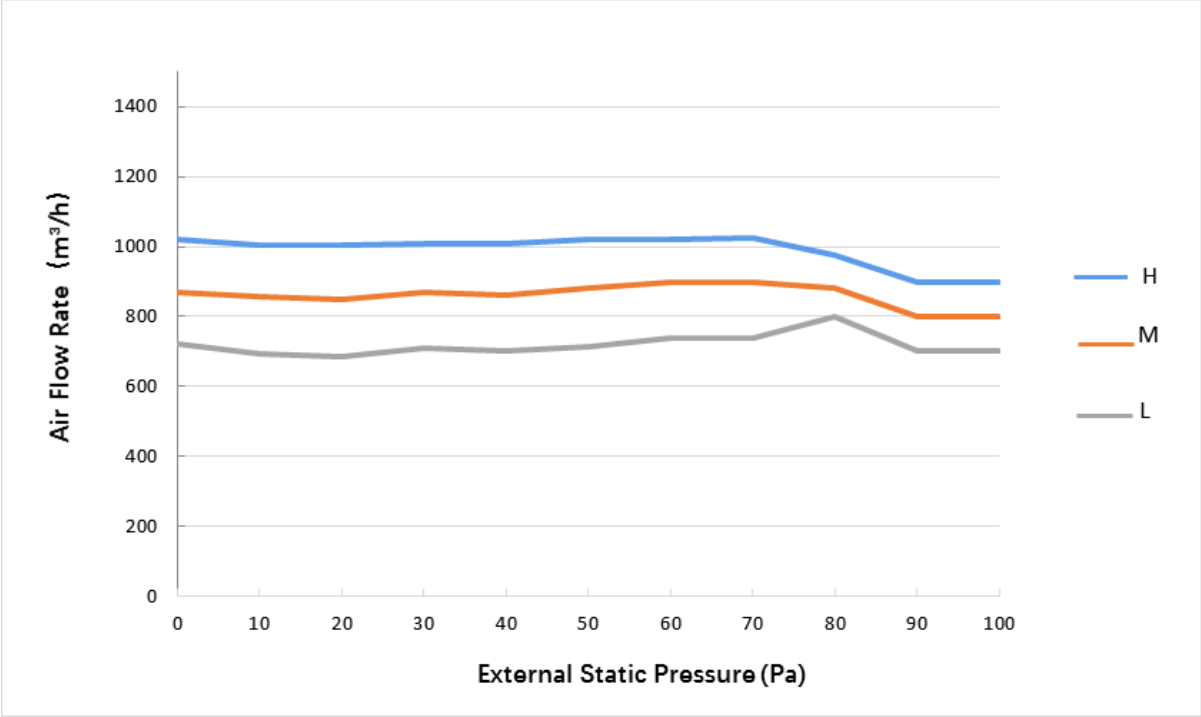
Air Flow Rate (m³/h)
1400
1200
1000
800
600
400
200
0
0 10 20 30 40 50 60 70 80 90 100
External Static Pressure (Pa)
H
M
L

MTJ-07HWFNX-QRD1W(GA), MTJ-09HWFNX-QRD1W(GA)

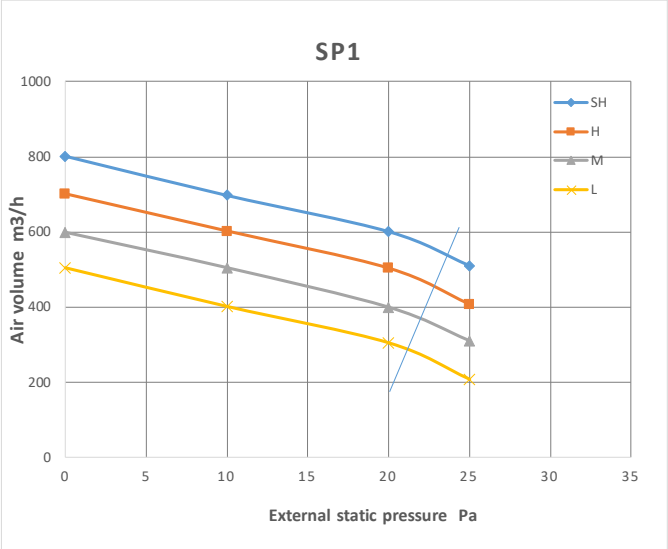

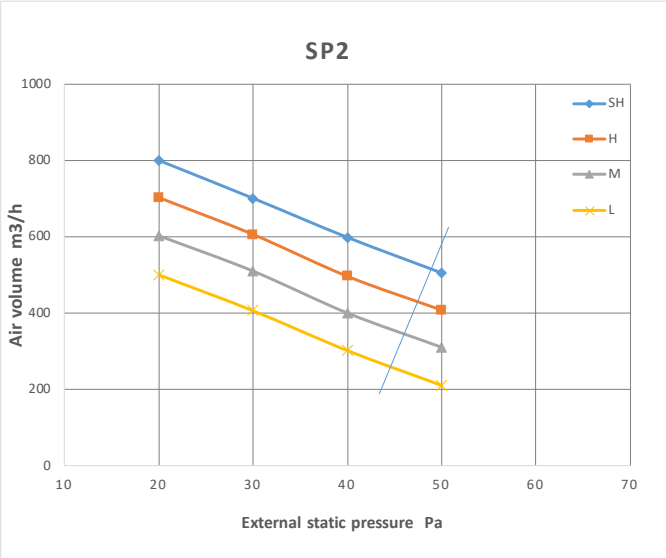

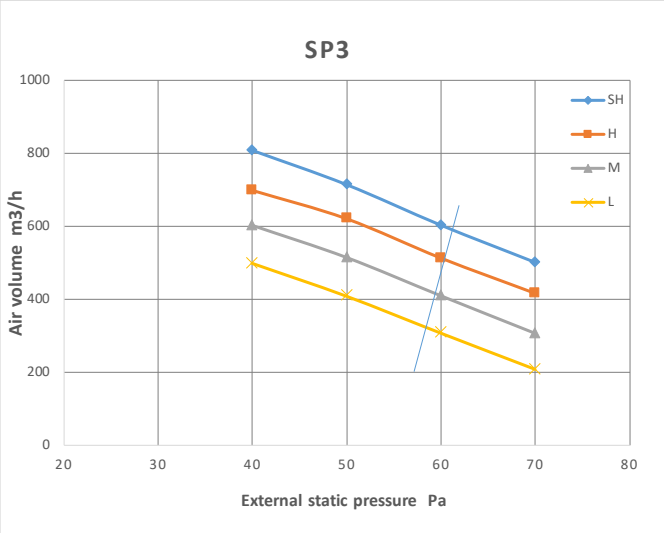

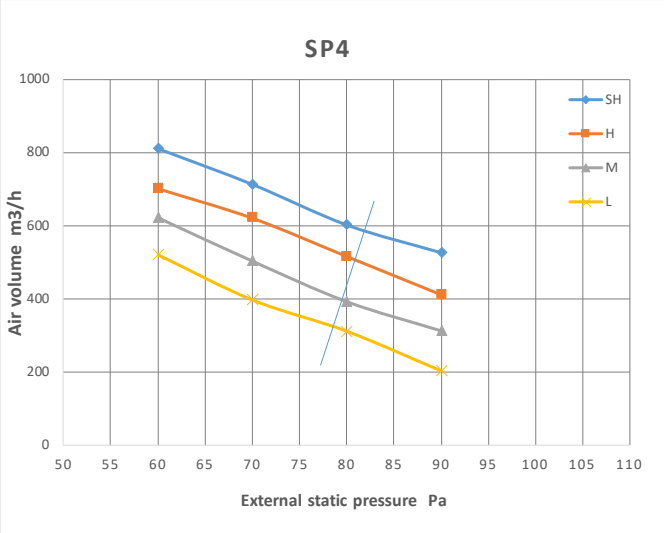

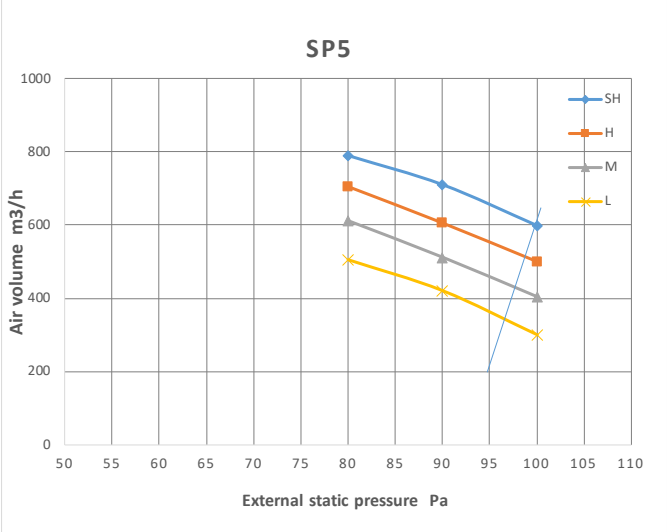

Specifications

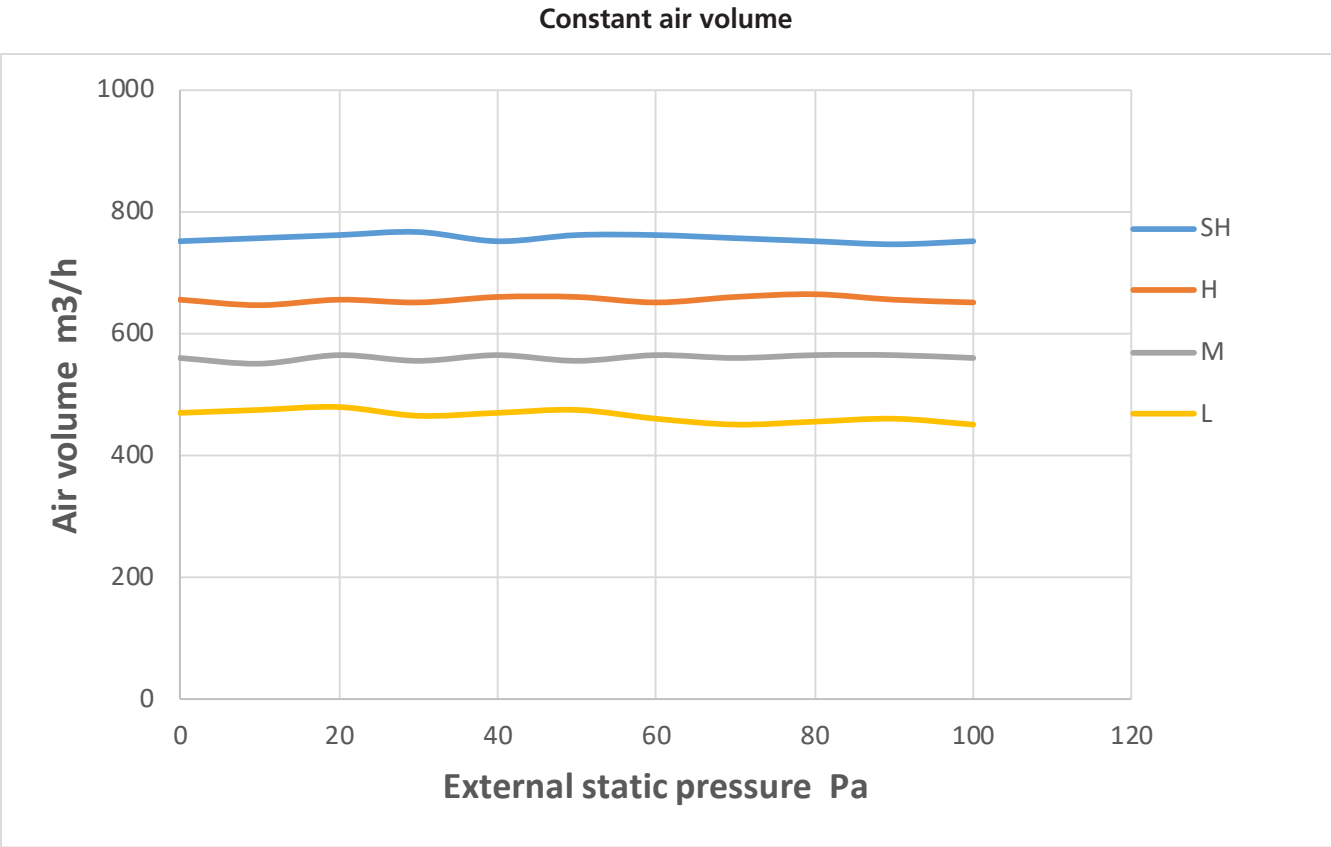
Constant air volume
1000
800
600
400
200
0
Air volume m3/h
0
20
40
60
80
100
120
External static pressure Pa
SH
H
M
L

MTJ-12HWFNX-QRD1W(GA)

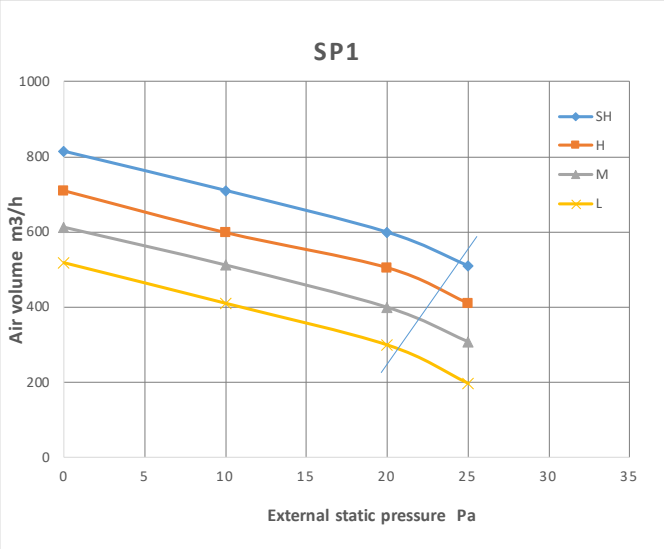

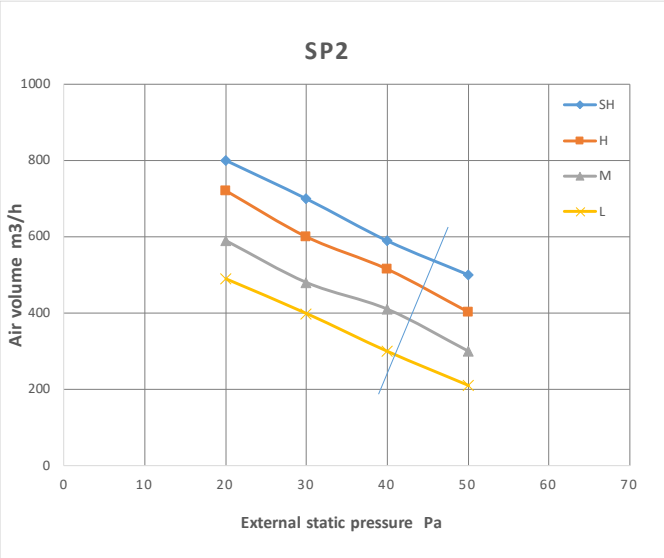

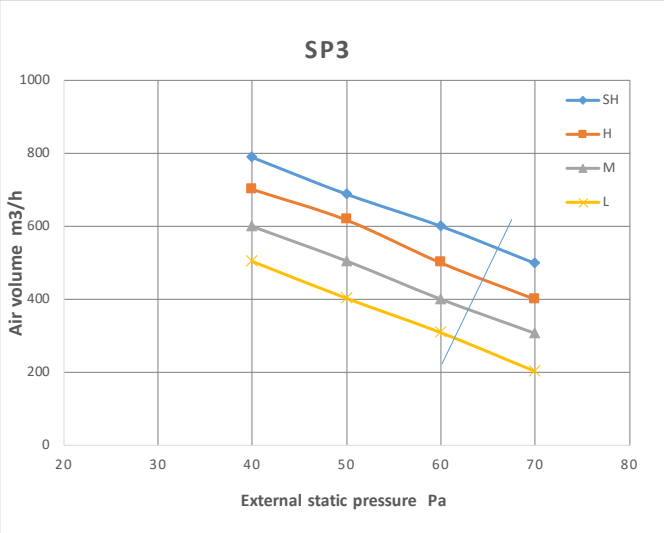

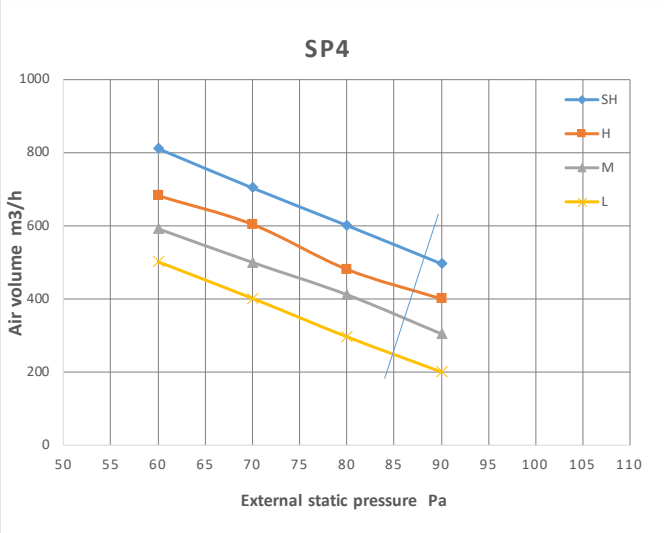

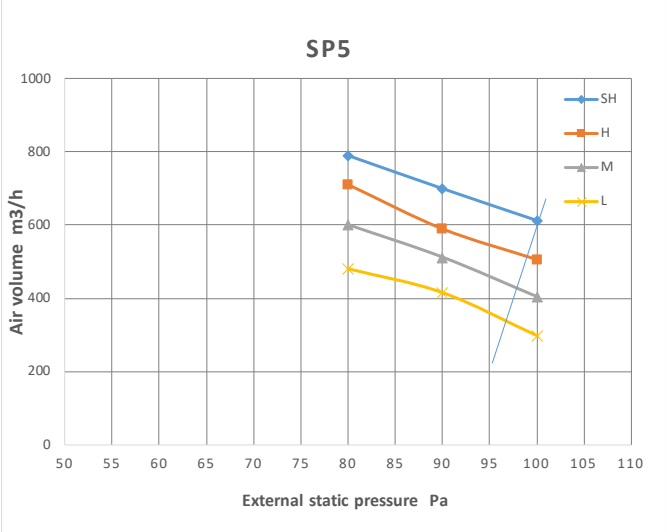

Specifications

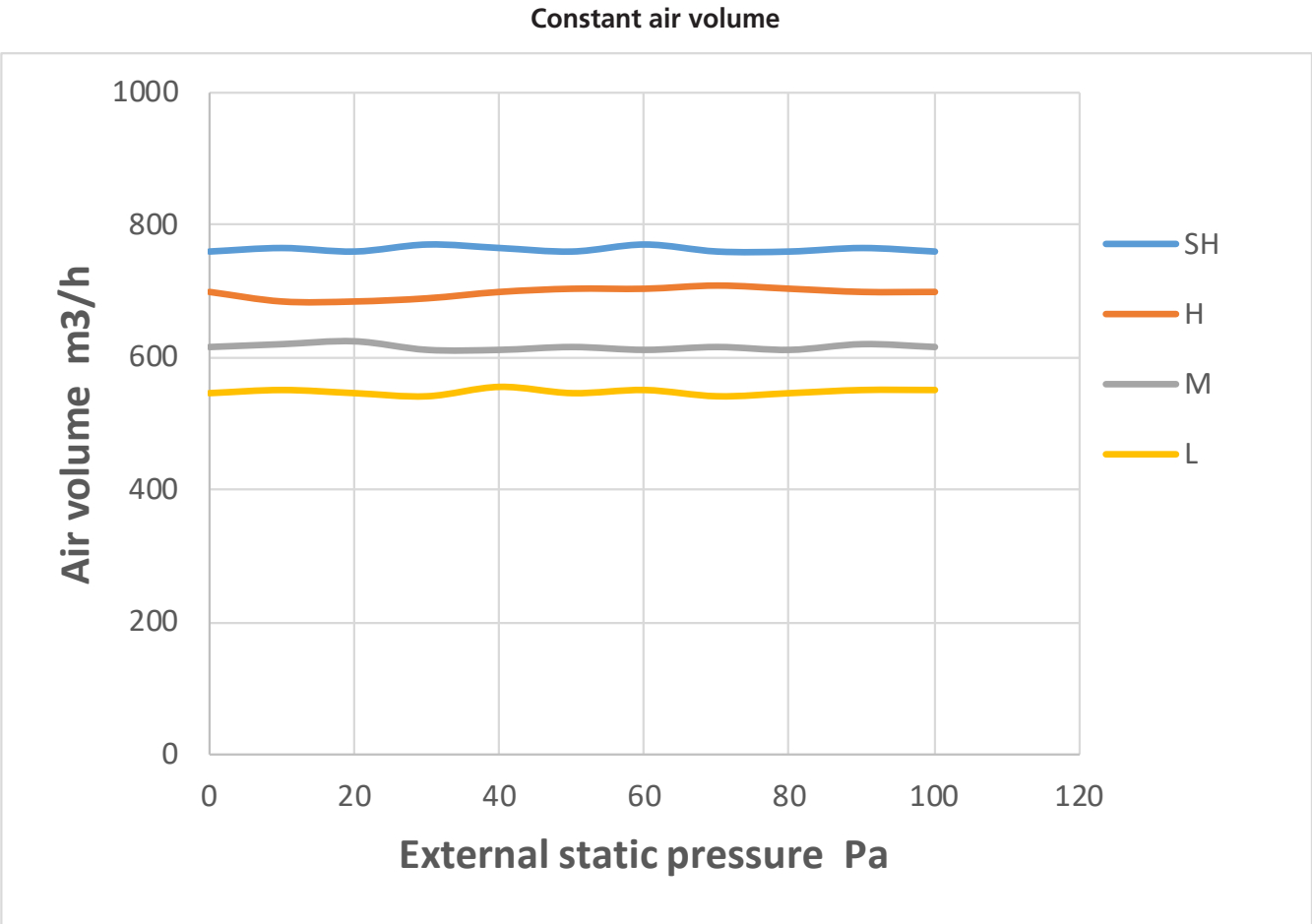
Constant air volume
1000
800
600
400
200
0
Air volume m3/h
0
20
40
60
80
100
120
External static pressure Pa
SH
H
M
L

MTJ-18HWFNX-QRD1W(GA)

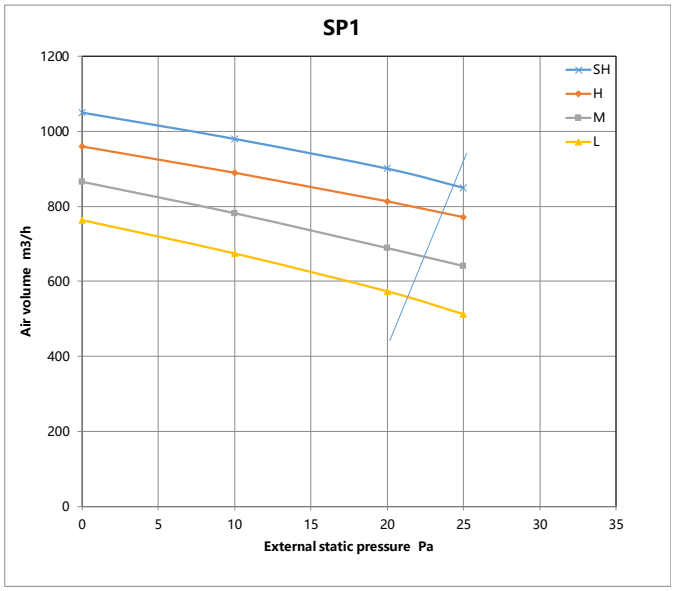

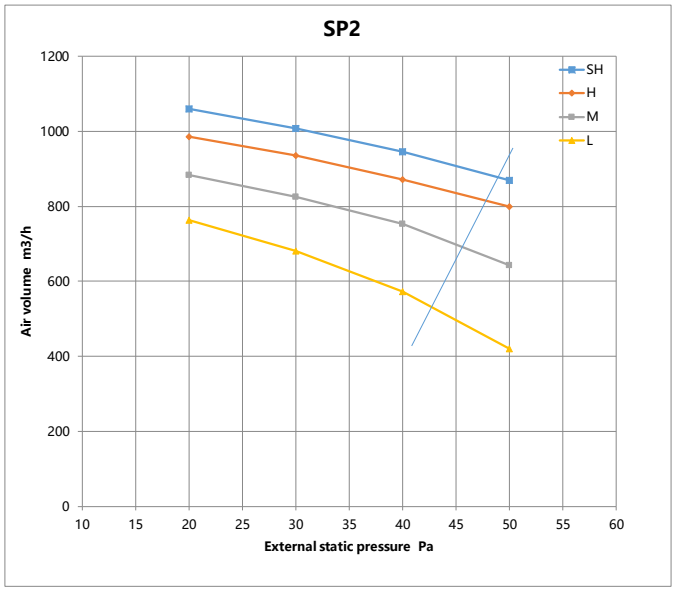

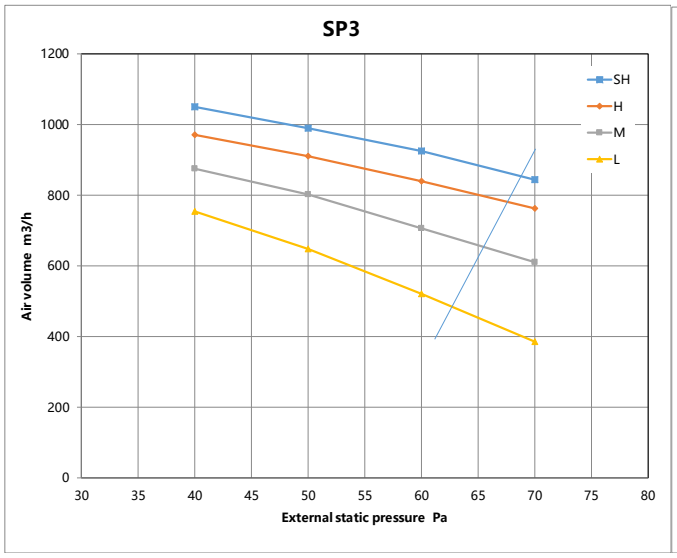

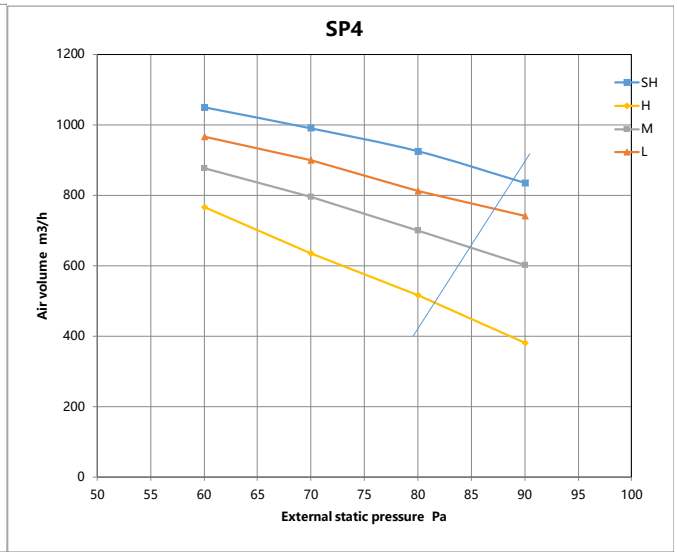

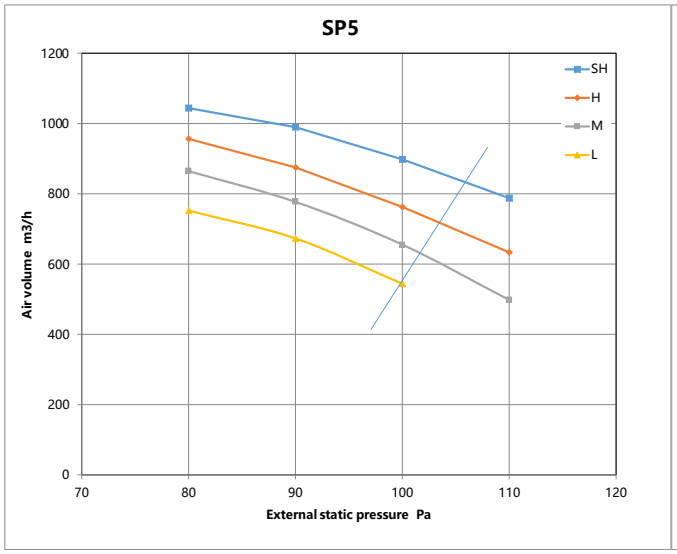

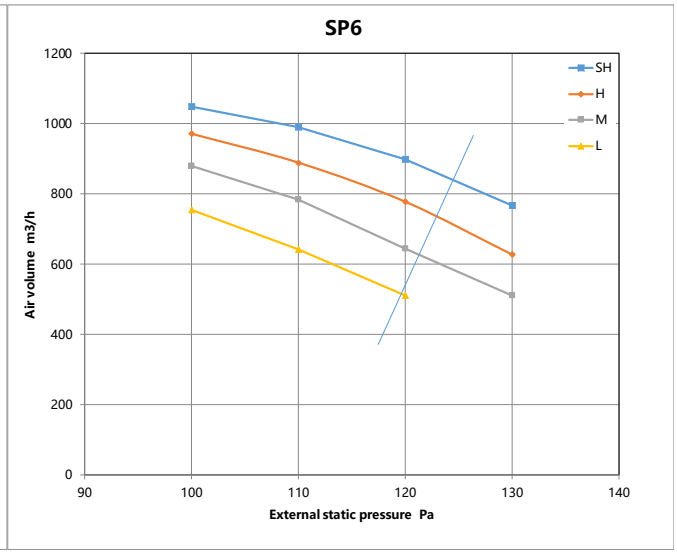

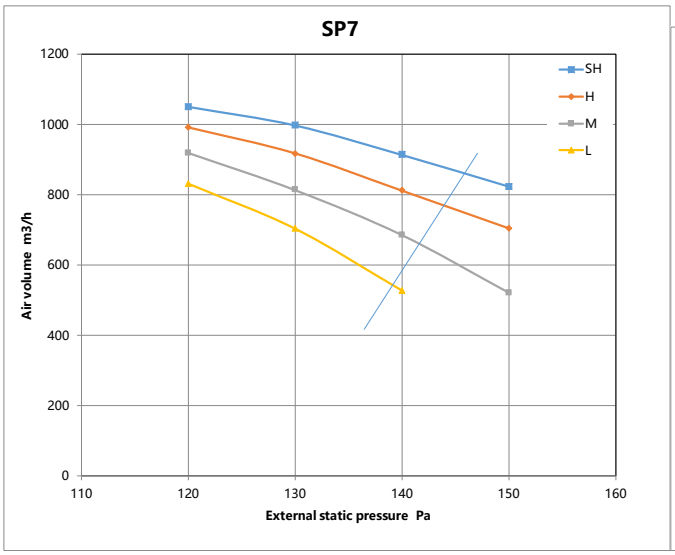

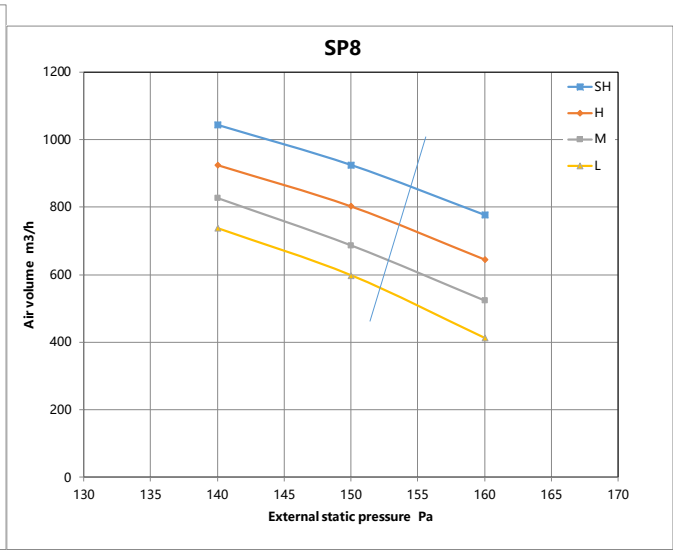

Constant air volume

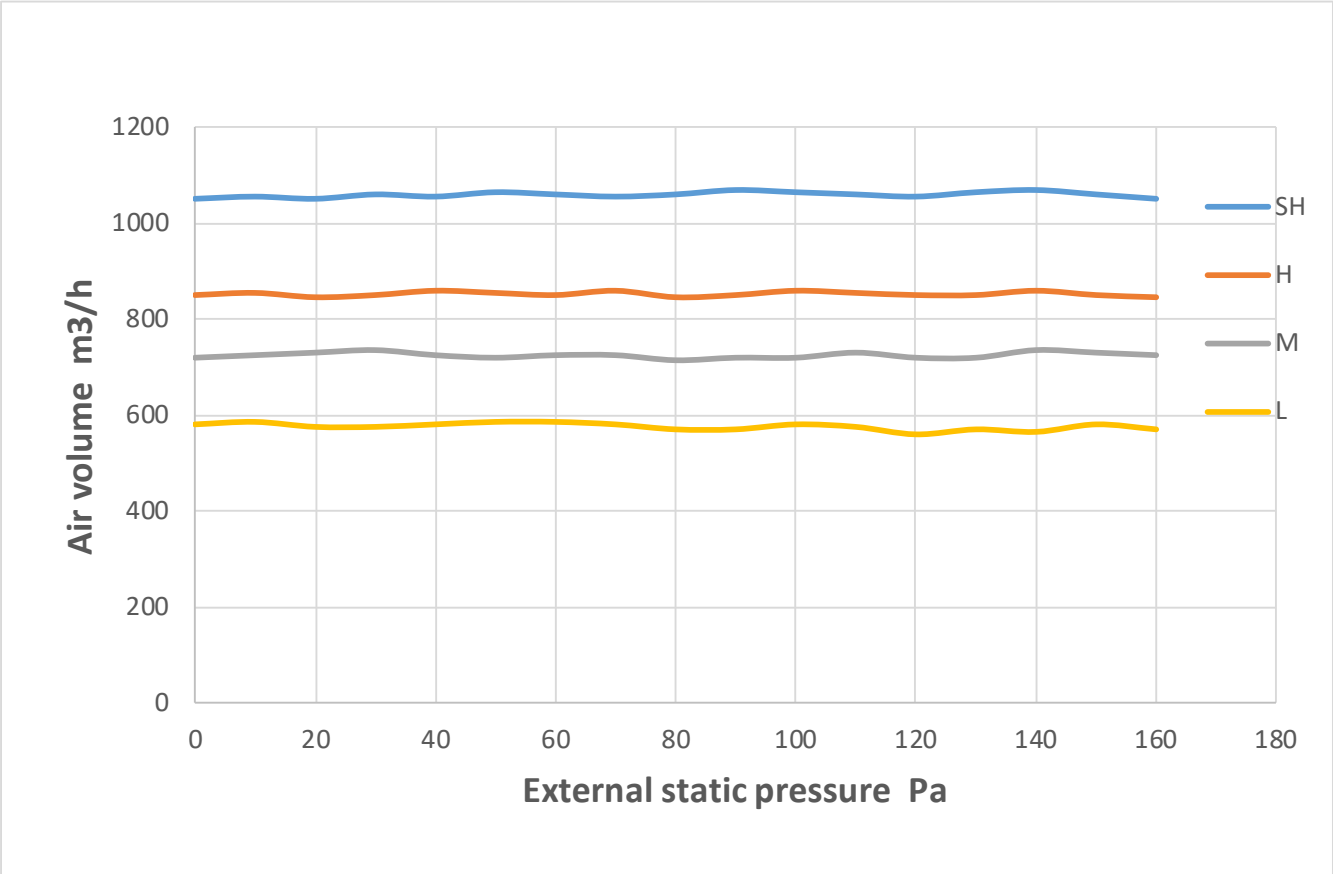

MTJ-24HWFNX-QRD1W(GA)

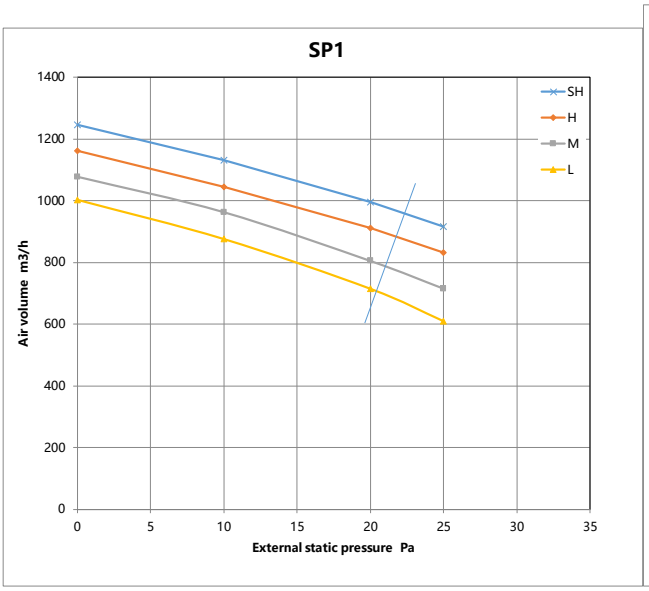

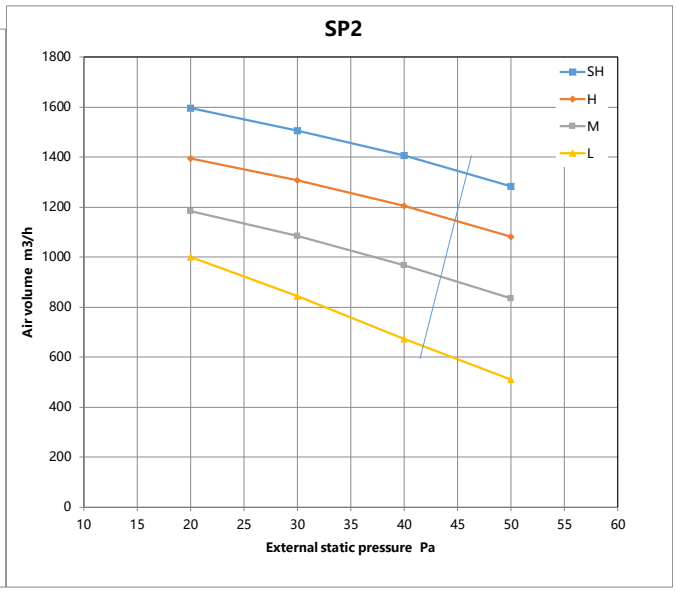

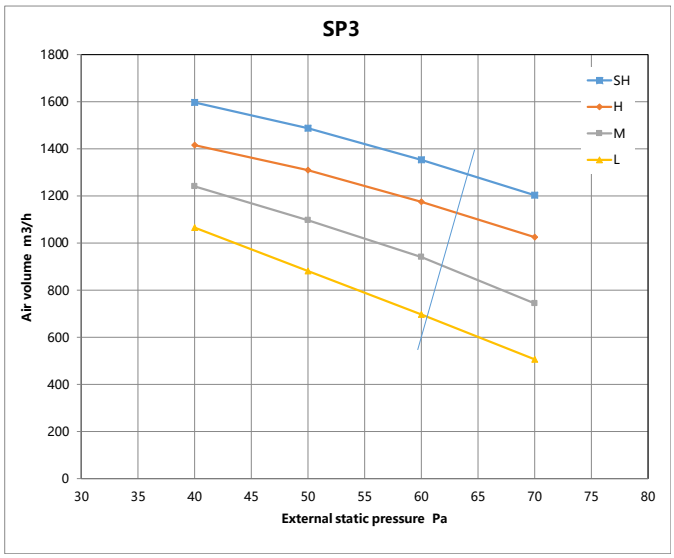

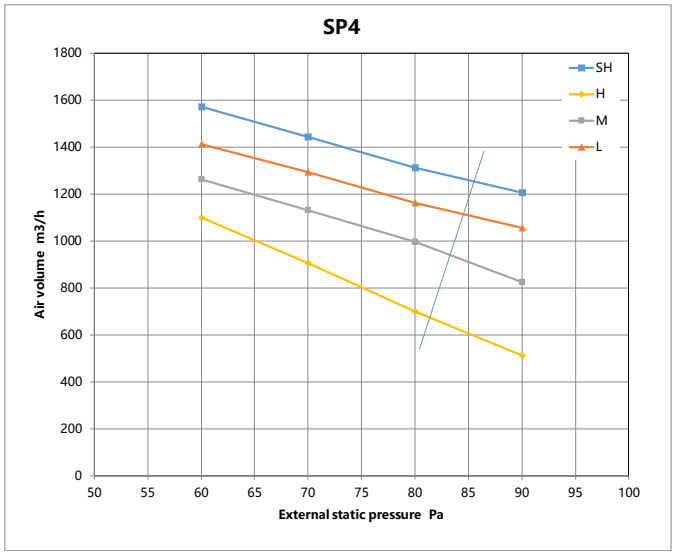

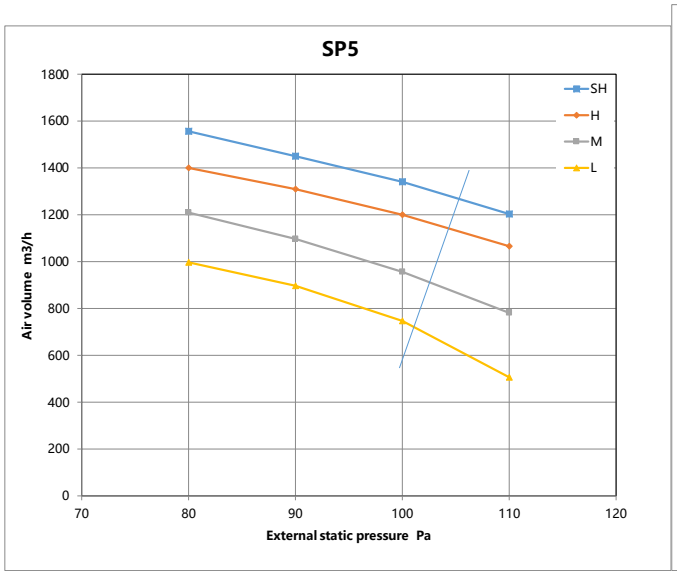

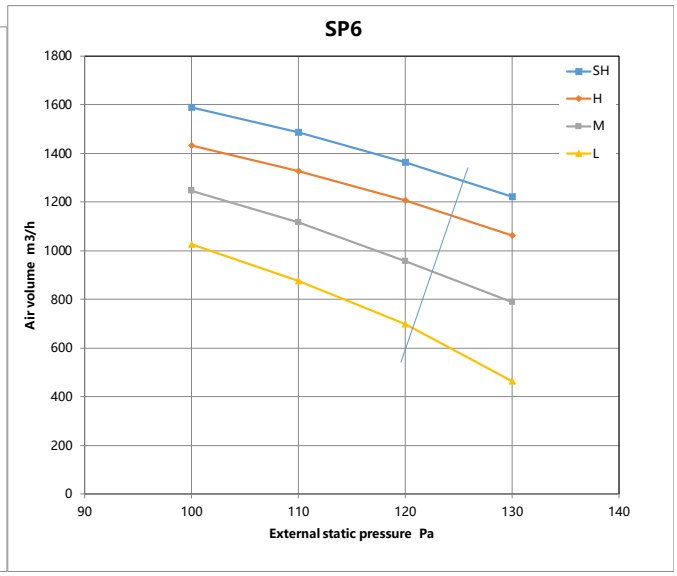

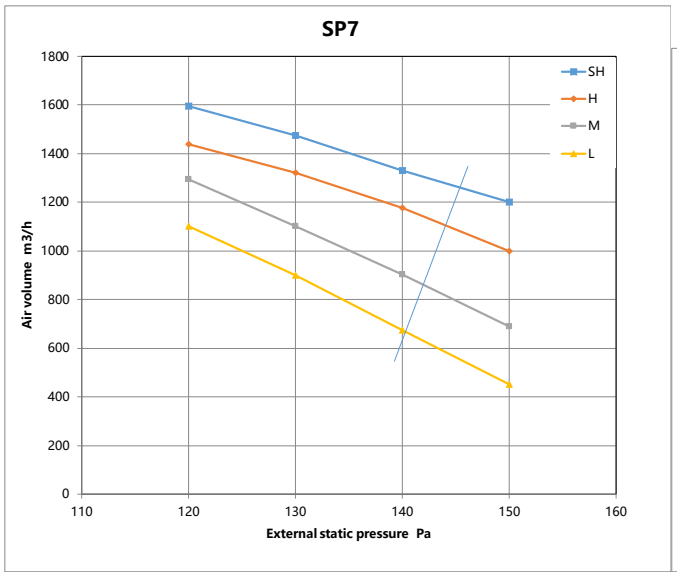

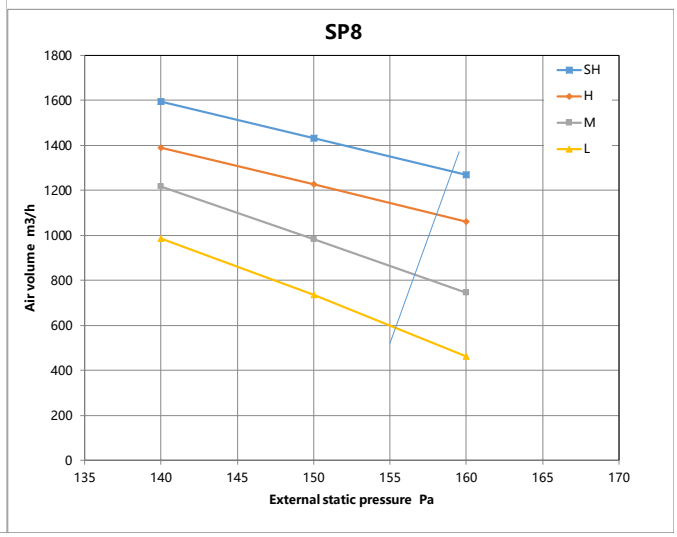

Constant air volume

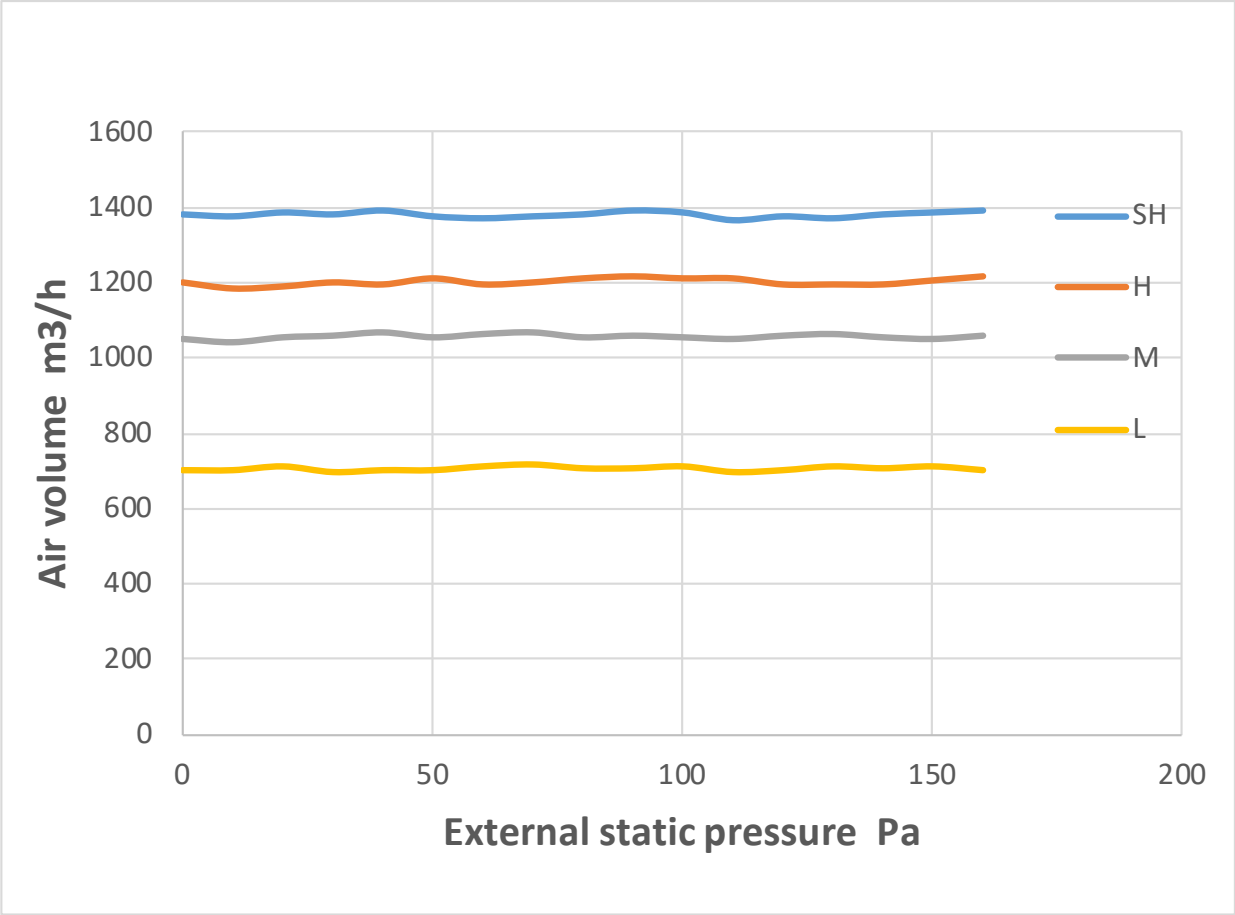

Product Features

Contents

1. Display Function

Unit display functions

Wall mounted Type-Foreset:

Display A Display B Display C Display D

Display		Function
fresh or		Fresh(available on select units only)
defrost or		Defrost
run or		When the unit is on
timer or		When TIMER is on
		WiFi control (available on select units only)
88	Temperature value	Temperature
	ON (3s)	Activation of Timer ON, Fresh, Swing, Turbo, or Silent
	OF (3s)	Cancellation of Timer OFF, Fresh, Swing, Turbo, or Silent
	dF	Defrost
	cF	Warming in heating mode
	SC	Self-clean (available on select units only)
	FP	Heating in room temperature under 8°C
	E→C→0→set temperature →E gradually illuminates to 88 in one second intervals	ECO function (available on select units only)

Note: Please select the display function according to your purchase product.

Wall mounted Type-Aurora:

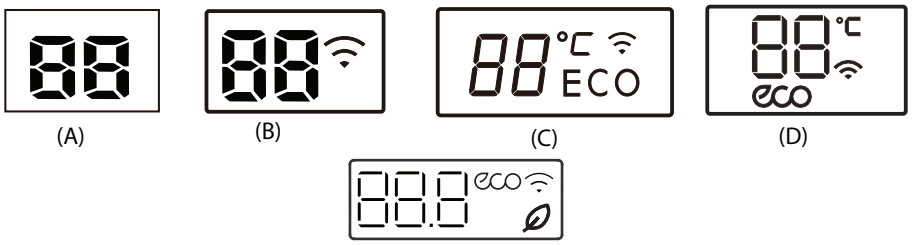

Display		Function
		Fresh(available on select units only)
ECO		ECO function (available on select units only)
°C		Lights up in different colour according to the operation mode(some units): Under COOL and DRY mode, it displays as cool colour.Under HEAT mode, it displays as warm colour.
		when Wireless Control feature is activated(some units)
88	Temperature value	Temperature
	ON (3s)	Activation of Timer ON, Fresh, Swing, Turbo, or Silent
	OF (3s)	Cancellation of Timer OFF, Fresh, Swing, Turbo, or Silent
	dF	Defrost
	cF	Warming in heating mode
	SC	Self-clean (available on select units only)
	FP	Heating in room temperature under 8°C

Note: Please select the display function according to your purchase product.

Wall mounted Type-All Easy:

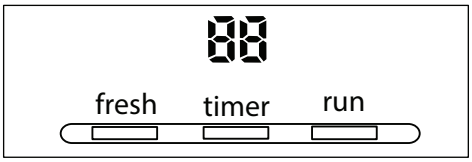

Display A

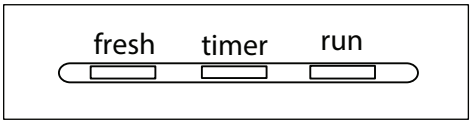

Display B

Display		Function
fresh		When Fresh feature is activated(some units)
timer		When TIMER is set
run		When the unit is on
		WiFi control (available on select units only)
88	Set temperature value	Temperature
	Room temperature	Temperature (fan and Drying mode)
	ON (3s)	Activation of Timer ON, Fresh, Swing, Turbo, or Silent
	OF (3s)	Activation of Timer OFF or cancellation of Fresh, Swing, Turbo, or Silent
	dF	Defrost(Heat pump units)
	cF	Activation of anti-cold wind in heating mode
	SC	Self-clean (available on select units only)
	FP	Heating in room temperature under 8°C
	set temperature gradually illuminates to in one second interval	ECO function (available on select units only)

Note: Please select the display function according to your purchase product.

Wall mounted Type-XTREME

Display A

Display B

Display		Function
fresh		Fresh(available on select units only)
defrost		Defrost
run		When the unit is on
timer		When TIMER is on
		WiFi control (available on select units only)
	Temperature value	Temperature
	ON (3s)	Activation of Timer ON, Fresh, Swing, Turbo, or Silent
	OF (3s)	Cancellation of Timer OFF, Fresh, Swing, Turbo, or Silent
	dF	Defrost
	CL	Active Clean(For Inverter split Type) or self-cleaning(For Fixed-speed Type)
	FP	Heating in room temperature under 8°C

Note: Please select the display function according to your purchase product.

Wall mounted Type-BREEZELESS

Function	Display
Temperature	Set temperature value
Temperature (fan and Drying mode)	Room temperature
Activation of Timer ON, Fresh, Swing, Turbo, or Silent	ON (3s)
Cancellation of Timer OFF, Fresh, Swing, Turbo, or Silent	OF (3s)
Defrost	dF
Self-clean (available on select units only)	SC
Heating in room temperature under 8°C or 12°C	FP
Fresh(available on select units only)	
ECO function (available on select units only)	eco
WiFi control (available on select units only)	

Wall mounted Type-Glory Pro

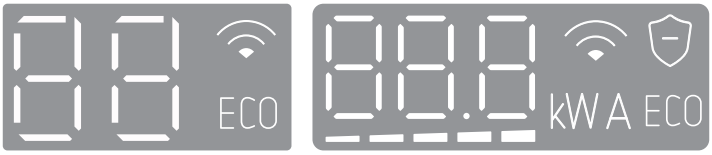

Display Code	Function
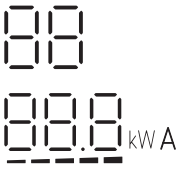	• Displays temperature, operation feature and error codes. • For some units, when GEAR function is activated, the display window will display and flash the target power value(kW), current value(A) or gear levels (Lx) for 15 seconds. The gear levels displays as: L1 gear(–), L2 gear(– –), L3 gear(– – –), L4 gear(– – – –), L5 gear(– – – – –).
	When Fresh feature is turned on(some units).
ECO	When ECO+ feature is turned on.
	When Wireless Control feature is activated. (some units)
ON (for 3s when)	• Timer ON is set. (if the unit is OFF, ON remains on when TIMER ON is set). • Fresh, UV lamp, Swing, Turbo , Breeze away or Silent feature is turned on.
OF (for 3s when)	• Timer OFF is set. • Fresh, UV lamp, Swing, Turbo , Breeze away or Silent feature is turned off.
dF	When defrosting(cooling & heating units).
CL	When active clean function is turned on.
FP	When 8°C(46°F) heating mode is turned on(for cooling & heating units).

Wall mounted Type-BREEZELESS E

Display Code	Function
ECO	When ECO feature is activated.
	When Wireless Control feature is activated. (some units)
	When Air magic or UV lamp(if any) feature is activated.
88.8	Displays temperature, operation feature and Error codes.
ON (3s)	Timer ON is set. UV lamp, Fresh, Brezzeless, SWING, TURBO, or SILENCE features is turned on.
OF (3s)	Timer OFF is set. UV lamp, Fresh, Brezzeless, SWING, TURBO, or SILENCE features is turned off.
dF	When defrosting(cooling & heating units).
CL	When active clean function is turned on.
FP	When 8°C(46°F) heating mode is turned on.

Duct Type:

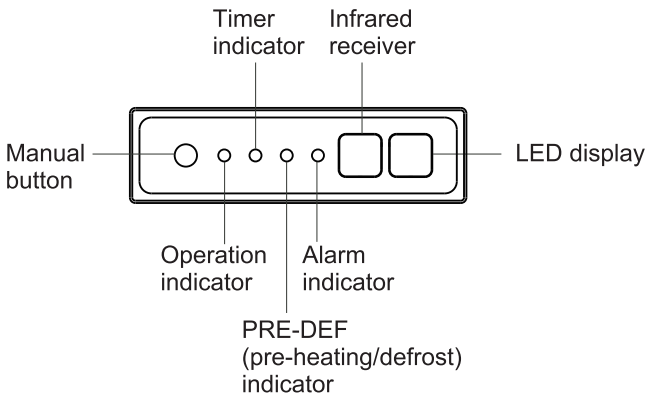

Compact Cassette Type:

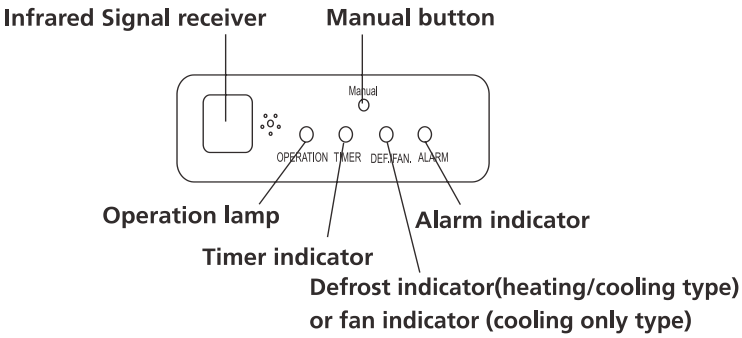

New Compact Cassette Type/New 4-way Cassette Type

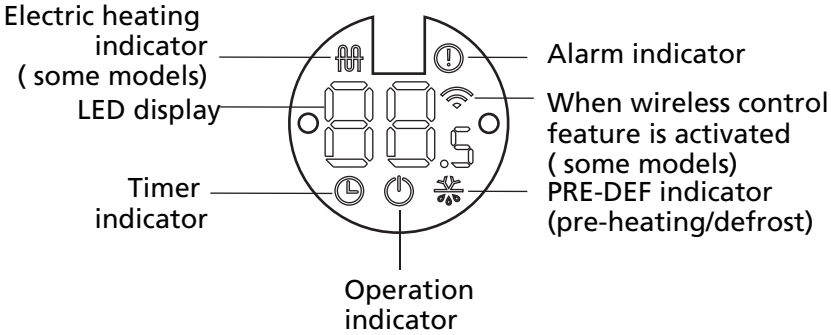

Product Features

Console Type

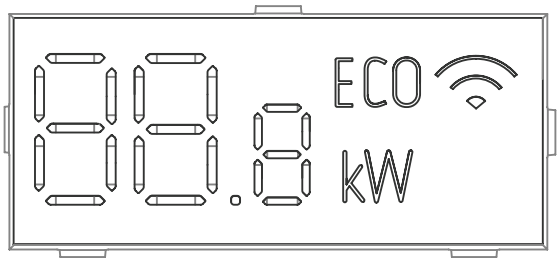

Display		Function
ECO		ECO function (available on select units only)
		When Wireless Control feature is activated (some units)
88.8	Temperature value	Temperature
	ON (3s)	Timer ON is set. Activation of Swing, Boost, Silence or UV-C lamp
	OF (3s)	Timer OFF is set. Cancellation of Swing, Boost, Silence or UV-C lamp
	dF	Defrost
	CL	Active Clean
	FP	Heating in room temperature under 8°C(46°F)

2. Operation Modes and Functions

2.1 Abbreviation

Unit element abbreviations

Abbreviation	Element
T1	Indoor room temperature
T2	Coil temperature of evaporator middle
T2B	Coil temperature of evaporator outlet(It is located in outdoor unit)
T3	Coil temperature of condenser
T4	Outdoor ambient temperature
T5	Compressor discharge temperature
TS	Setting temperature
Tsc	Adjusted setting temperature

2.2 Safety Features

Open Circuit/Disconnection Sensor Protection

Indoor fan delayed operation

- When the unit starts, the louver is automatically activated and the indoor fan will operate after a period of 7 seconds.
- If the unit is in heating mode, the indoor fan is regulated by the anti-cold wind function.

Zero crossing detection error protection(For Forest series)

If AC can not detect zero crossing signal for 4 minutes or the zero crossing signal time interval is not correct, the unit will stop and the LED will display the failure. The correct zero crossing signal time interval should be between 6-13ms.

Compressor three-minute delay at restart

Compressor functions are delayed for up to one minute upon the first startup of the unit, and are delayed for up to three minutes upon subsequent unit restarts.

Inverter module protection

The inverter module has an automatic shutoff mechanism based on the unit's current, voltage, and temperature. If automatic shutoff is initiated, the corresponding error code is displayed on the indoor unit and the unit ceases operation.

Automatic shutoff based on discharge temperature

If the compressor discharge temperature exceeds a certain level for a period of time, the compressor ceases operation.

Oil return

Running rules:

1. If the compressor frequency keeps lower than setting frequency for setting time, the AC will rise the frequency to setting frequency for setting time and then resume to former frequency.

2. The EXV will keep 300p while the indoor units will keep the current running mode.

If the outdoor ambient is higher than setting frequency during the oil return, the AC quit oil return.

2.3 Fan Mode

When fan mode is activated:

- The outdoor fan and compressor cease operation.
- Temperature control is disabled and no temperature setting is displayed.
- The indoor fan speed can be set to high, medium, low, , auto or 1%-100%.
- The louver operations are identical to those in cooling mode.
- Auto fan in fan-only mode, AC operates the same as auto fan in cooling mode with the temperature set at 24°C.

2.4 Cooling Mode

2.4.1 Indoor Fan Control

- In cooling mode, the indoor fan operates continuously. The fan speed can be set to high, medium, low, auto or 1%-100%.
- The auto fan acts according to the value of T1-TS.

For MCA3U-18HRFNX-QRD0W, MCA3U-07HRFNX-QRD0W(GA),MCA3U-09HRFNX-QRD0W(GA), MCA3U-12HRFNX-QRD0W(GA), MCA3U-18HRFNX-QRD0W(GA), MTIU-07HWFNX-QRD0W(GA), MTIU-09HWFNX-QRD0W(GA), MTIU-18HWFNX-QRD0W, MTIU-12HWFNX-QRD0W(GA), MTIU-18HWFNX-QRD0W(GA), MSAGAU-09HRFNX-QRD0GW, MSAGBU-09HRFN8-QRD1GW(GA), MSAGBU-12HRFNX-QRD0GW, MSAGBU-12HRFN8-QRD1GW(GA), MSAGCU-18HRFNX-QRD0GW, MSAGDU-24HRFN8-QRD0GW, Glory Pro series, console type, new compact cassette type& A7 duct type:

the auto fan acts according to the value of T1-Tsc.

2.4.2 Outdoor Fan Control

- The outdoor fan is controlled by T4.

2.4.3 Evaporator Temperature Protection

When T2<4°C for 250 seconds or T2<0°C, the compressor and outdoor fan cease operation and resume to normal when T2>8°C and the time of protection is no less than 3 minutes.

2.4.4 Condenser Temperature Protection

When condenser temperature is more than setting value, the compressor ceases operations.

2.5 Heating Mode(Heat pump models)

2.5.1 Indoor Fan Control

- When the compressor is on, the fan speed can be set to high, medium, low, or auto. And the anti-cold wind function has the priority.
- The auto fan acts according to the value of T1-Ts.

For MCA3U-18HRFNX-QRD0W, MCA3U-07HRFNX-QRD0W(GA),MCA3U-09HRFNX-QRD0W(GA), MCA3U-12HRFNX-QRD0W(GA), MCA3U-18HRFNX-QRD0W(GA), MTIU-07HWFNX-QRD0W(GA), MTIU-09HWFNX-QRD0W(GA), MTIU-18HWFNX-QRD0W, MTIU-12HWFNX-QRD0W(GA), MTIU-18HWFNX-QRD0W(GA), MSAGAU-09HRFNX-QRD0GW, MSAGBU-09HRFN8-QRD1GW(GA), MSAGBU-12HRFNX-QRD0GW, MSAGBU-12HRFN8-QRD1GW(GA), MSAGCU-18HRFNX-QRD0GW, MSAGDU-24HRFN8-QRD0GW, Glory Pro series, console type, new compact cassette type& A7 duct type:: the auto fan acts according to the value of T1-Tsc.

2.5.2 Outdoor Fan Control

- The outdoor fan is controlled by T4.

2.5.3 Defrosting mode

- The unit enters defrosting mode according to the value of temperature of T3 and the value range of temperature change of T3 and also the compressor running time.
- If any one of the following items is satisfied, the defrosting will finish and the machine will turn to normal heating mode.
  - T3 rises to be higher than TCDE1°C.
  - T3 keeps to be higher than TCDE2°C for 80 seconds.
  - The machine has run for 10 minutes in defrosting mode.

2.5.4 Evaporator Temperature Protection

When the evaporator temperature exceeds a preset protection value, the compressor and outdoor fan cease operations, the outdoor fan motor ceases operation 30 seconds later.

2.5.5 Prevent Over-Heating

In heating mode, when the indoor unit has no capacity requirement due to indoor room temperature increased, the Indoor fan will run in super breeze. (Anti-cold wind function has the priority)

2.6 Auto Mode

For MCA3U-07HRFNX-QRD0W(GA), MCA3U-09HRFNX-QRD0W(GA), MCA3U-12HRFNX-QRD0W(GA), MCA3U-18HRFNX-QRD0W(GA), MSAGAU-09HRFNX-QRD0GW, MSAGBU-09HRFN8-QRD1GW(GA), MSAGBU-12HRFNX-QRD0GW, MSAGBU-12HRFN8-QRD1GW(GA), MSAGCU-18HRFNX-QRD0GW, MSAGDU-24HRFN8-QRD0GW, console type, new compact cassette type& A7 duct type:

- This mode can be selected with the remote controller and the temperature setting can be adjusted between 16°C~30°C
- In auto mode, the machine selects cooling, heating or fan-only mode on the basis of T1,Ts and T4.

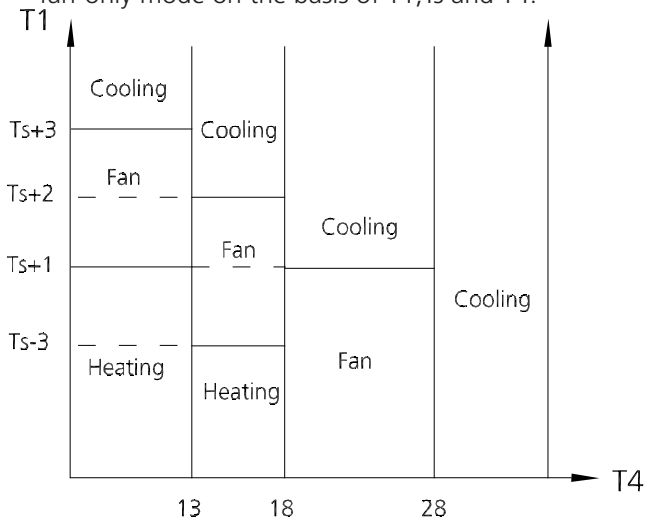

- This mode can be selected with the remote controller and the temperature setting can be adjusted between 17°C~30°C
- In auto mode, the machine selects cooling, heating, or fan-only mode on the basis of △T (△T =T1-Ts).

For MCA3U-18HRFNX-QRD0W, MTIU-07HWFNX-QRD0W(GA), MTIU-09HWFNX-QRD0W(GA), MTIU-18HWFNX-QRD0W, MTIU-12HWFNX-QRD0W(GA), MTIU-18HWFNX-QRD0W(GA)::

ΔT	Running mode
ΔT>2°C	Cooling
-3°C≤ΔT≤2°C	Fan-only
ΔT<-3°C	Heating*

For console type& Glory Pro series:

In auto mode, the machine selects cooling, heating or fan-only mode on the basis of T1,Ts, T4 and relative

humidity(φ).

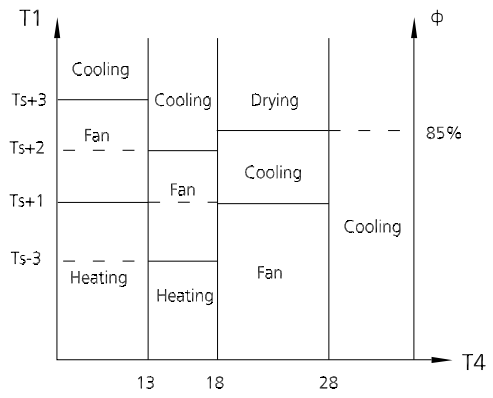

For other models:

ΔT	Running mode
ΔT>2°C	Cooling
-2°C≤ΔT≤2°C	Fan-only
ΔT<-2°C	Heating*

Heating*: In auto mode, cooling only models run the fan.

- Indoor fans run at the auto fan speed of the relevant mode.
- The louver operates the same as in relevant mode.
- If the machine switches mode between heating and cooling, the compressor pauses for a certain period of time intermittently and then selects a mode based on T1-Ts.
- If the setting temperature is modified, the machine selects a new running function.

2.7 Drying Mode

- Indoor fan speed is fixed at low and cannot be changed.
- Low indoor room temperature protection
- In drying mode, if room temperature is lower than 10°C, the indoor fan will stop and not resume until room temperature exceeds 12°C.
- All protections are activated and operate the same as they do in cooling mode.
- The louver operates the same as in cooling mode.

2.8 Timer Function

- The timing range is 24 hours.
- Timer On. The machine turns on automatically at the preset time.
- Timer Off. The machine turns off automatically at the preset time.
- Timer On/Off. The machine turns on automatically at the preset On Time, and then turns off automatically at the preset Off Time.
- Timer Off/On. The machine turns on automatically at the preset Off Time and then turns off automatically at the preset On Time.
- The timer does not change the unit operation mode. If the unit is off now, it does not start up immediately after the "timer off" function is set. When the setting time is reached, the timer LED switches off and the unit running mode remains unchanged.
- The timer uses relative time, not clock time

2.9 Sleep Function

- The sleep function is available in cooling, heating, or auto mode.
- The operational process for sleep mode is as follows:
- When cooling, the temperature rises 1°C (to not higher than 30°C) every hour. After 2 hours, the temperature stops rising and the indoor fan is fixed to auto speed.
- When heating, the temperature decreases 1°C (to not lower than 17°C) every hour. After 2 hours, the temperature stops decreasing and the indoor fan is fixed at auto speed. Anti-cold wind function takes priority.

2.10 Forced operation function

- Forced cooling mode:

The compressor and outdoor fan continue to run and the indoor fan runs at rated speed. After running for 30 minutes, the AC will switch to auto mode with a preset temperature of 24°C

- Forced auto mode:

Forced auto mode operates the same as normal auto mode with a preset temperature of 24°C.

  - When any one of indoor units runs in forced cooling, it is designated as the master forced cooling unit. Other indoor units act as the slave forced cooling units. The slave forced cooling units cannot exit forced cooling mode until the master forced cooling unit does so. They then switch to cooling mode in low fan with the temperature set at 24°C.
  - Forced defrosting mode:
    - In the forced cooling mode (single heat engine for forced auto mode), press and hold the forced key for 5 seconds after release,

immediately enter the forced frosting mode.

- When any one of indoor units runs in forced defrosting mode, the indoor fan is off and other indoor fans are off. The outdoor unit operates forced defrosting.

2.11 Auto-Restart

- The indoor unit has an auto-restart module that allows the unit to restart automatically. The module automatically stores the current settings (not including sleep mode) and, in the case of a sudden power failure, will restore those setting automatically within 3 minutes after power returns.
- If the unit was in forced cooling mode, it will run in this mode for 30 minutes and turn to auto mode with temperature set to 24°C.
- If there is a power failure while the unit is running, the compressor starts 3 minutes after the unit restarts. If the unit was already off before the power failure, the compressor starts 1 minute after the unit restarts.

2.12 Follow Me (Optional)

- If you press "Follow Me" on the remote, the indoor unit will beep. This indicates the follow me function is active.
- Once active, the remote control will send a signal every 3 minutes, with no beeps. The unit automatically sets the temperature according to the measurements from the remote control.
- The unit will only change modes if the information from the remote control makes it necessary, not from the unit's temperature setting.

2.13 Drain Pump Control (Optional)

- Use the water-level switch to control drain pump.
- The system checks the water level every 5 seconds.
  - When the A/C operates in cooling (including auto cooling) or forced cooling mode, the pump begins running immediately and continuously until cooling stops.
  - If the water level increases up to the control point, the LED displays an alarm code and the drain pump opens and continually monitors the water level. If the water level falls and LED alarm code is no longer displayed (drain pump close delay is 1 minute), the unit goes back into its last mode. Otherwise, the entire system (including the pump) stops and the LED displays an alarm again after 3 minutes.

2.14 Mode Conflict

- The indoor units can not work cooling mode and heating at same time.
- Heating mode has a priority.

(1) Definition

	Cooling mode	Heating Mode	Fan	Off
Cooling mode	No	Yes	No	No
Heating Mode	Yes	No	Yes	No
Fan	No	Yes	No	No
Off	No	No	No	No

No: No mode conflict;

Yes: Mode conflict

(2) Unit action

- In case of one Indoor unit working in cooling mode or fan mode, and another indoor unit is set to heating mode, the indoor unit working in cooling mode or fan mode will change to off. The outdoor unit will change to heating mode after compressor stop 3 minutes. .
- In case of one Indoor unit working in heating mode, and another indoor unit is set to cooling mode or fan mode, the indoor unit setting to cooling mode or fan mode will change to stand by. The outdoor unit will continue working in heating mode.
- If heating mode stops (not including the indoor unit in heating mode reaching the set temperature), 3 minutes after the outdoor unit restarts and works in cooling mode or fan-only mode.

3. Remote Controller Functions

3.1 Infrared Wireless Remote Controller

3.1.1 RG51Q1/BGE(Standard for cassette)

Remote Controller Specifications

Model	RG51Q1/BGE
Rated Voltage	3.0V (Dry batteries R03/ LR03×2)
Reaching Distance	8m
Environment Temperature Range	-5℃~60℃(23℉~140℉)

Buttons and Functions

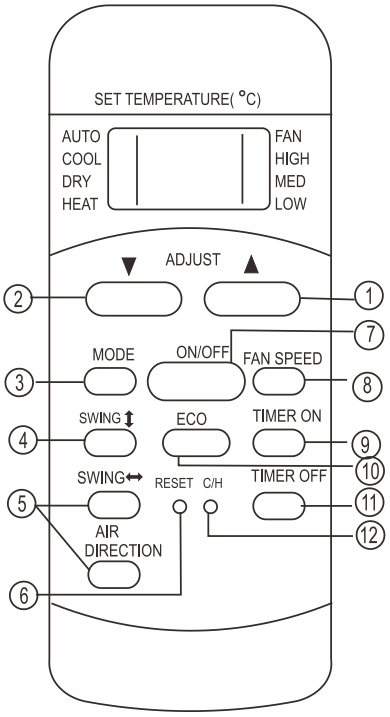

1. TEMP UP ▲ Button: Push this button to increase the indoor temperature setting in 1℃increments to 30℃

2. TEMP DOWN▼Button : Push this button to decrease the indoor temperature setting in 1℃increments to 17℃.

3. MODE Button: Once pressing, running mode will be selected in the following sequence:

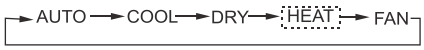

NOTE: No heating mode for cool only Type unit.

4. SWING Button: Used to stop or start horizontal louver movement. The louver will swing up and down automatically if push this button.

5. SWING Button: Used to stop or start vertical louver movement.

AIR DIRECTION Button: Used to set the desired up/down air flow direction. The louver changes 6 degree in angle for each press.

6. RESET Button(inner located): Once the recessed RESET button is pressed, all of the current settings will be cancelled and the controller will return to the initial settings.

7. ON/OFF Button: For turning on or turning off the air conditioner.

8. FAN SPEED Button: Fan speed will be selected in following sequence once pressing this button:

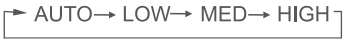

9. TIME ON Button: For time ON setting. Press this button to activate the Auto-on time setting. Each press will increase the time setting in 30 minutes increments, up to 10 hours, then at 1 hour increments up to 24 hours. To cancel the Auto-on time setting, just press the button until the time setting is 0.0.

10. ECO Button: Select this function during the sleeping time. It can maintain the most comfortable temperature and save energy. This function is available on COOL, HEAT or AUTO mode only .

NOTE: While the unit is running under Energy-saving mode, it would be cancelled if press MODE, FAN SPEED or ON/OFF button.

11. TIME OFF Button: For time OFF setting. Press this button to activate the Auto-off time setting. Each press will increase the time setting in 30 minutes increments, up to 10 hours, then at 1 hour increments up to 24 hours. To cancel the Auto-off time setting, just press the button until the time setting is 0.0.

12. CH Button(inner located): Press this recessed button to shift the mode between Cooling only and Cooling & Heating according to the feature of the machine. The factory default setting mode is Cooling & Heating. For example, the unit you purchased is Cooling only models, please press this recessed button with a needle of 1mm to shift the operation mode.

3.1.2 R51M/E(Standard for Forest series)

Remote Controller Specifications

Model	R51M/E
Rated Voltage	3.0V (Dry batteries R03/ LR03×2)
Reaching Distance	8m
Environment Temperature Range	-5℃~60℃(23℉~140℉)

Buttons and Functions

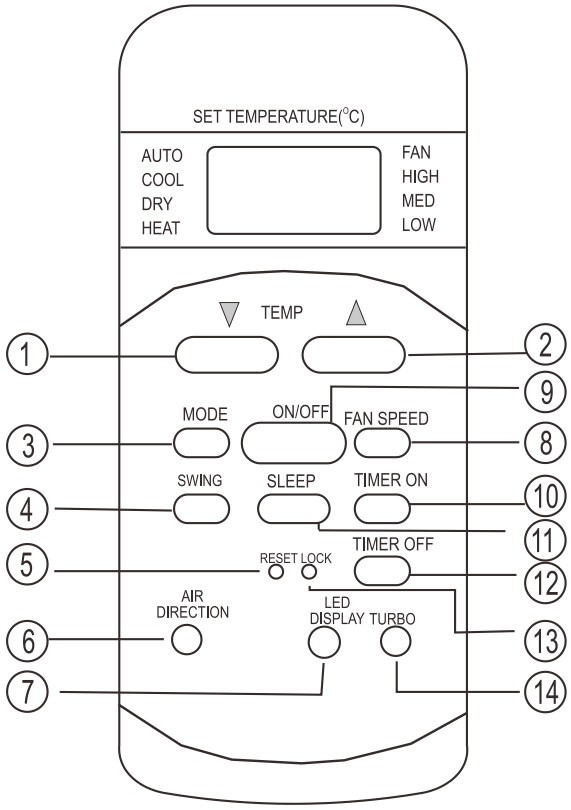

1. TEMP DOWN▼Button : Push this button to decrease the indoor temperature setting in 1℃increments to 17℃.

2. TEMP UP ▲ Button: Push this button to increase the indoor temperature setting in 1℃increments to 30℃

3. MODE Button: Once pressing, running mode will be selected in the following sequence:

AUTO → COOL → DRY → HEAT → FAN

NOTE: No heating mode for cool only Type unit.

4. SWING Button: Push this switch button to activate auto swing feature of the horizontal louver. Push it again to stop.

5. RESET Button (inner located): Once the recessed RESET button is pressed, all of the current settings will be cancelled and the controller will return to the initial settings.

6. AIR DIRECTION Button: Press this button to change the swing angle of the louver. The swing angle of the louver is 6 degree for each press. When the louver swing at a certain angle which would affect the cooling and heating effect of the air conditioner, it would automatically change the swing direction . No symbol will appear in the display area when press this button. (Not applicable to units without this function).

7. LED DISPLAY Button: Press this button to clear the digit display in the air conditioner, press it again to activate it (Not available for the units without LED display window).

8. FAN SPEED Button: Fan speed will be selected in following sequence once pressing this button:

AUTO → LOW → MED → HIGH

9. ON/OFF Button: For turning on or turning off the air conditioner.

10. TIME ON Button: For time ON setting. Press this button to activate the Auto-on time setting. Each press will increase the time setting in 30 minutes increments, up to 10 hours, then at 1 hour increments up to 24 hours. To cancel the Auto-on time setting, just press the button until the time setting is 0.0.

11. SLEEP Button: Press this button to go into the Energy-Saving operation mode. Press it again to cancel. This function is only can be used on COOL, HEAT and AUTO mode and maintain the most comfortable temperature for you.

12. TIME OFF Button: For time OFF setting. Press this button to activate the Auto-off time setting. Each press will increase the time setting in 30 minutes increments, up to 10 hours, then at 1 hour increments up to 24 hours. To cancel the Auto-off time setting, just press the button until the time setting is 0.0.

13. LOCK Button(inner located): When you press the recessed LOCK button, all current settings are locked in and the remote controller does not accept any operation except that of the LOCK. Press again to cancel the LOCK mode.

14. TURBO Button: Active/Disable Turbo function. Turbo function enables the unit to reach the preset temperature at cooling or heating operation in the shortest time(if the indoor unit does not support this function, there is no corresponding operation happened when pressing this button.)

3.1.3 RG51F1/E(Standard for Aurora series)

Remote Controller Specifications

Model	RG51F1/E
Rated Voltage	3.0V (Dry batteries R03/ LR03×2)
Reaching Distance	8m
Environment Temperature Range	-5℃~60℃(23℉~140℉)

Buttons and Functions

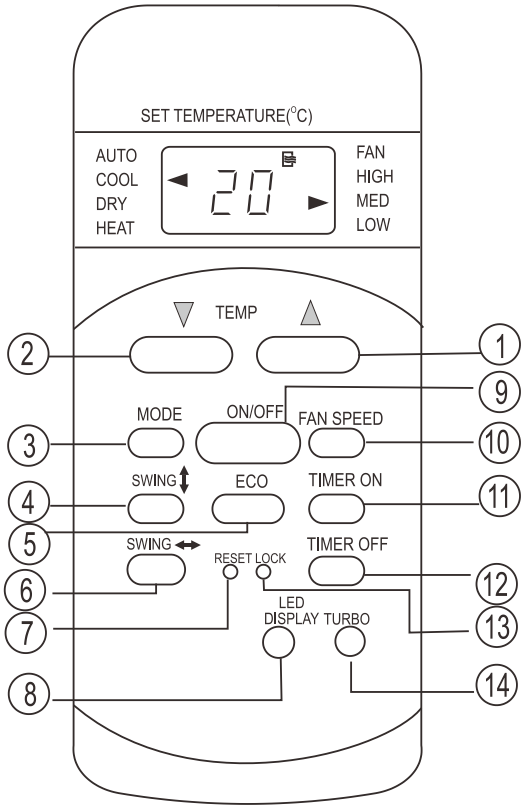

1. TEMP UP ▲ Button: Push this button to increase the indoor temperature setting in 1℃ increments to 30℃

2. TEMP DOWN ▼ Button : Push this button to decrease the indoor temperature setting in 1℃ increments to 17℃.

3. MODE Button: Once pressing, running mode will be selected in the following sequence:

AUTO → COOL → DRY → HEAT → FAN

NOTE: No heating mode for cool only Type unit.

4. SWING ↕ Button: Used to stop or start horizontal louver movement or set the desired up/down air flow direction. The louver changes 6 degree in angle for each press. If keep pushing more than 2 seconds, the louver will swing up and down automatically.

5. ECO Button: Used to enter the energy efficient mode. Under cooling mode, press this button, the remote controller will adjust the temperature automatically to 24°C, fan speed of Auto to save energy(but only if the set temperature is less than 24°C). If the set temperature is between 24°C and 30°C, press the ECO button, the fan speed will change to Auto, the set temperature will remain unchanged.

NOTE: Pressing the TURBO and SLEEP button, modifying the mode or adjusting the set temperature to less than 24°C will stop ECO operation.

Under ECO operation, the set temperature should be 24°C or more. it may result in insufficient cooling. If you feel uncomfortable, just press the ECO button again to stop it.

6. SWING ↔ Button: Used to stop or start vertical louver movement and set the desired left/right air flow direction. The vertical louver changes 6 degree in angle for each press.

7. RESET Button (inner located): Once the recessed RESET button is pressed, all of the current settings will be cancelled and the controller will return to the initial settings.

8. LED DISPLAY Button: Disable/Active indoor screen Display. When pushing the button, the indoor screen display is cleared, press it again to light the display.

9. ON/OFF Button: Operation starts when this button is pressed and stops when the button is pressed again.

10. FAN SPEED Button: Fan speed will be selected in following sequence once pressing this button:

AUTO → LOW → MED → HIGH

11. TIME ON Button: For time ON setting. Press this button to activate the Auto-on time setting. Each press will increase the time setting in 30 minutes increments, up to 10 hours, then at 1 hour increments up to 24 hours. To cancel the Auto-on time setting, just press the button until the time setting is 0.0.

12. TIME OFF Button: For time OFF setting. Press this button to activate the Auto-off time setting. Each press will increase the time setting in 30 minutes increments, up to 10 hours, then at 1 hour increments up to 24 hours. To cancel the Auto-off time setting, just press the button until the time setting is 0.0.

13. LOCK Button(inner located): When you press the recessed LOCK button, all current settings are locked in and the remote controller does not accept any operation except that of the LOCK. Press again to cancel the LOCK mode.

14. TURBO Button: Active/Disable Turbo function. Turbo function enables the unit to reach the preset temperature at cooling or heating operation in the shortest time(if the indoor unit does not support this function, there is no corresponding operation happened when pressing this button.)

3.1.4 RG51I55/BGEF(Standard for All Easy series)

Remote Controller Specifications

Model	RG51I55/BGEF
Rated Voltage	3.0V (Dry batteries R03/ LR03×2)
Reaching Distance	8m
Environment Temperature Range	-5℃~60℃(23℉~140℉)

Buttons and Functions

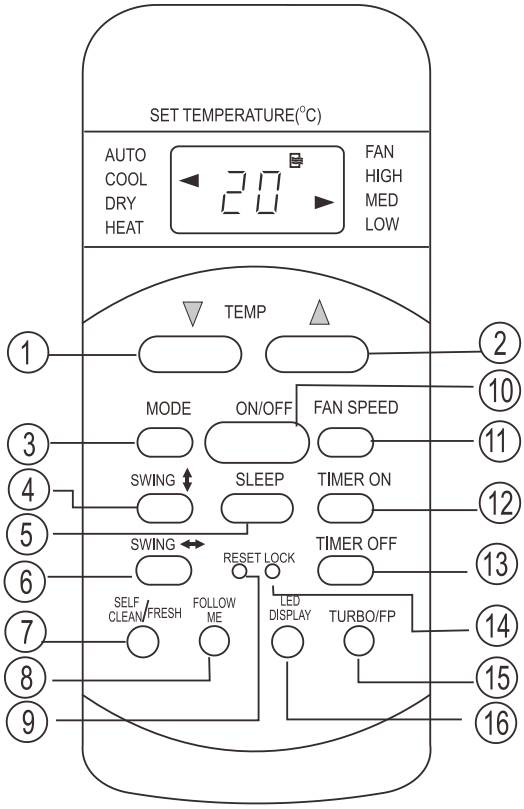

1. TEMP DOWN▼Button : Push this button to decrease the indoor temperature setting in 1℃increments to 17℃.

2. TEMP UP ▲ Button: Push this button to increase the indoor temperature setting in 1℃increments to 30℃

3. MODE Button: Once pressing, running mode will be selected in the following sequence:

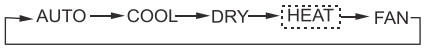

NOTE: No heating mode for cool only Type unit.

4. SWING ↕ Button: Used to stop or start horizontal louver movement or set the desired up/down air flow direction. The louver changes 6 degree in angle for each press. If keep pushing more than 2 seconds, the louver will swing up and down automatically.

5. SLEEP Button: Press this button to go into the Energy-Saving operation mode. Press it again to cancel. This function is only can be used on COOL, HEAT and AUTO mode and maintain the most comfortable temperature for you.

6. SWING ↔ Button: Used to stop or start vertical louver movement and set the desired left/right air flow direction. The vertical louver changes 6 degree in angle for each press.

7. SELF CLEAN/FRESH Button: Press this button under COOL or DRY mode, the self clean function is activated. Under SELF CLEAN mode, the air conditioner will automatically clean and dry the evaporator and keep it as fresh for the next operation.

Hold down this button for at least 2 seconds to activate/ cancel FRESH feature.When the FRESH function is initiated, the Ionizer/Plasma Dust Collector(depending on models) is energized and will help to remove pollen and impurities from the air.

8. FOLLOW ME Button: Push this button to initiate the Follow Me feature, the remote display is actual temperature at its location. The remote control will send this signal to the air conditioner every 3 minutes interval until press the Follow Me button again. The air conditioner will beep to indicate the Follow Me feature has ended if it does not receive the signal during any 7 minute interval.

9. RESET Button (inner located): Once the recessed RESET button is pressed, all of the current settings will be cancelled and the controller will return to the initial settings.

10. ON/OFF Button: Operation starts when this button is pressed and stops when the button is pressed again..

11. FAN SPEED Button: Fan speed will be selected in following sequence once pressing this button:

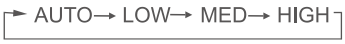

12. TIME ON Button: For time ON setting. Press this button to activate the Auto-on time setting. Each press will increase the time setting in 30 minutes increments, up to 10 hours, then at 1 hour increments up to 24 hours. To cancel the Auto-on time setting, just press the button until the time setting is 0.0.

13. TIME OFF Button: For time OFF setting. Press this button to activate the Auto-off time setting. Each press will increase the time setting in 30 minutes increments, up to 10 hours, then at 1 hour increments up to 24 hours. To cancel the Auto-off time setting, just press the button until the time setting is 0.0.

14. LOCK Button(inner located): When you press the recessed LOCK button, all current settings are locked in

and the remote controller does not accept any operation except that of the LOCK. Press again to cancel the LOCK mode.

15. TURBO/FP Button: Active/Disable Turbo function. Turbo function enables the unit to reach the preset temperature at cooling or heating operation in the shortest time(if the indoor unit does not support this function, there is no corresponding operation happened when pressing this button.)

Hold down this button for more than 2 seconds during heating operation(only when the setting mode is HEAT) will activate 8°C heating operation mode. The unit will operate at high fan speed with the temperature automatically set to 8°C.

16. LED DISPLAY Button: Press this button to clear the digit display in the air conditioner, press it again to activate it (Not available for the units without LED display window).

3.1.5 RG10A(B2S)/BGEF(Standard for XTREME series &MCA3U-07HRFNX-QRD0W(GA), MCA3U-09HRFNX-QRD0W(GA), MCA3U-12HRFNX-QRD0W(GA), MCA3U-18HRFNX-QRD0W(GA), console type, new compact cassette type and New 4-way cassette type)

Remote Controller Specifications

Model	RG10A(B2S)/BGEF
Rated Voltage	3.0V (Dry batteries R03/ LR03×2)
Reaching Distance	8m
Environment Temperature Range	-5℃~60℃(23℉~140℉)

Buttons and Functions

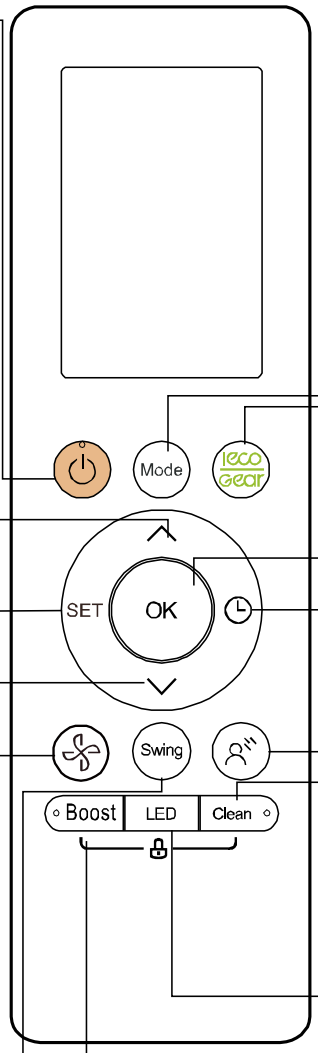

ON/OFF
Turns the unit on or off.

TEMP ∧
Increases temperate in 1°C (1°F) increments. Max. temperature is 30°C (86°F).
NOTE: Press together ∨& ∧ buttons at the same time for 3 seconds will alternate the temperature display between the °C & °F.

SET
Scrolls through operation functions as follows:
Fresh( ) → Sleep( )→ Follow Me( ) → AP mode( ) → Fresh...
The selected symbol will flash on the display area, press the OK button to confirm.

TEMP ∨
Decreases temperature in 1°C(1°F) increments. Min. temperature is 16°C(60°F).

FAN SPEED
Selects fan speeds in the following order: AU→ 20% →40%→60%→ 80%→ 100%.
Press the TEMP∧ or∨ button to increase/decrease the fan speed in 1% increments.

SWING
Starts and stops the horizontal louver movement. Hold down for 2 seconds to initiate vertical louver auto swing feature(some units).

BOOST
Enables unit to reach preset temperature in shortest possible time

MODE
Scrolls through operation modes as follows: **AUTO → COOL → DRY → HEAT → FAN**

ECO/GEAR
Press this button to enter the energy efficient mode in a sequence of following:
ECO →GEAR(75%) → GEAR(50%) → Previous setting mode →ECO ·····

OK
Used to confirm the selected functions

TIMER
Set timer to turn unit on or off

BREEZE AWAY
This feature avoids direct air flow blowing on the body and makes you feel indulging in silky coolness.
NTOE: This feature is available under cool, Fan and Dry mode only

CLEAN
Used to start/stop the Self Clean or Active Clean function.(Model dependent, please refer to the USER'S OPERATION & INSTALLATION MANUAL for details)

LED
Turns indoor unit's LED display and air conditioner buzzer on and off(model dependent), which create a comfortable and quiet environment.

3.1.6 RG10N(2HS)/BGEF(Standard for BREEZELESS series)

Remote Controller Specifications

Model	RG10N(2HS)/BGEF
Rated Voltage	3.0V (Dry batteries R03/LR03×2)
Reaching Distance	8m
Environment Temperature Range	-5°C~60°C(23°F~140°F)

Buttons and Functions

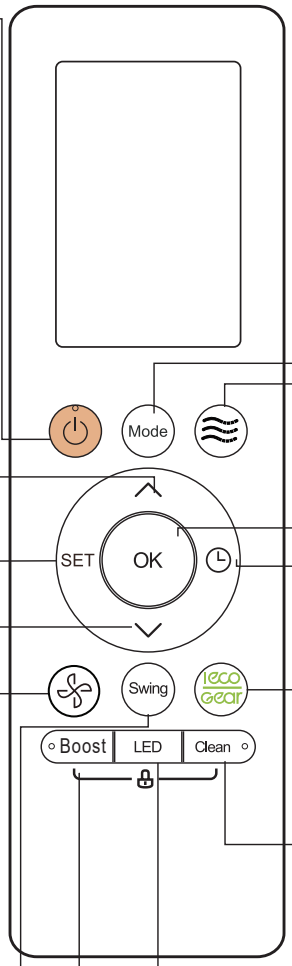

ON/OFF
Turns the unit on or off.

TEMP ∧
Increases temperature in 0.5°C (1°F) increments. Max. temperature is 30°C (86°F).
NOTE: Press together ∨ & ∧ buttons at the same time for 3 seconds will alternate the temperature display between the °C & °F.

SET
Scrolls through operation functions as follows:
Sleep( )→Follow Me( )→AP mode( )→Sleep...
The selected symbol will flash on the display area, press the OK button to confirm.

TEMP ∨
Decreases temperature in 0.5°C (1°F) increments
Min. temperature is 16°C (60°F).

FAN SPEED
Selects fan speeds in the following order: AU→20%→40%→60%→80%→100%.
Press the TEMP ∧ or ∨ button to increase/decrease the fan speed in 1% increments.

SWING
Starts and stops the horizontal louver movement. Hold down for 2 seconds to initiate vertical louver auto swing feature.

BOOST
Enables unit to reach preset temperature in shortest possible time

MODE
Scrolls through operation modes as follows: **AUTO → COOL → DRY → HEAT → FAN**
NOTE: HEAT mode is not supported by cooling only appliance.

Button
Scrolls through operation function as follows:
Breeze Away → Breeze Mild → Breezeless → Cancel → Breeze Away→ .....
NOTE: This feature is available under cooling mode only

OK
Used to confirm the selected functions

TIMER
Set timer to turn unit on or off

ECO/GEAR
Press this button to enter the energy efficient mode in a sequence of following:
ECO → GEAR(75%) → GEAR(50%) → Previous setting mode → ECO .....

CLEAN
Used to start/stop the Self Clean or Active Clean function. (Model dependent, please refer to the USER'S OPERATION & INSTALLATION MANUAL).

LED
Turns indoor unit's LED display and air conditioner buzzer on and off, which create a comfortable and quiet environment.

3.1.7 RG51A2(2)/EF(Standard for Glory Pro series)

Remote Controller Specifications

Model	RG51A2(2)/EF
Rated Voltage	3.0V (Dry batteries R03/LR03×2)
Reaching Distance	8m
Environment Temperature Range	-5°C~60°C(23°F~140°F)

Buttons and Functions

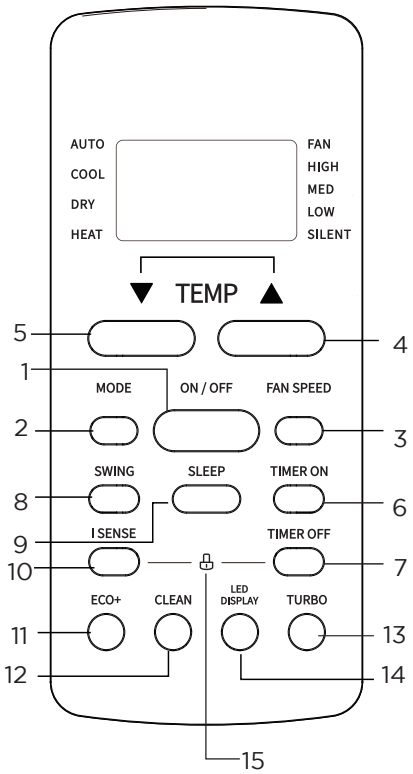

Model: RG51A2(2)/EF

	Description
1	**ON/OFF:** Turn the unit on or off.
2	**MODE**: Auto > Cool > Dry > Heat > Fan
3	**FAN SPEED**:Press the this button to cycle through the available fan speeds: Silent, Low, Med, High and Auto. This is available in for HEAT, COOL and FAN modes.
4	**Temp Up**: Increases temperature in 1°C (1°F) increments. Max. temperature is 30°C (86°F). NOTE: Press together ⌃ & ⌄ buttons at the same time for 3 seconds will alternate the temperature display between the °C & °F
5	**Temp Down**: Decreases temperature in 1°C (1°F) increments. Min. temperature is 16°C (60°F).
6	**TIMER ON**: Set timer to turn unit on .
7	**TIMER OFF**: Set timer to turn unit off .
8	**SWING**: Starts and stops the horizontal louver movement. Hold down for 2 seconds to initiate vertical louver auto swing feature(some units).
9	**SLEEP**: Used to save energy during sleeping hours.
10	**I SENSE**: Used to start/stop I SENSE function.
11	**ECO+** : Starts and stops the energy saving operation.
12	**CLEAN**: Used to start/stop the Active Clean function
13	**TURBO:** Enables unit to reach preset temperature in shortest possible time.
14	**LED DISPLAY:** Turns LED display & air conditioner buzzer on and off.
15	I SENSE TIMER OFF **Lock:** Press together these two buttons simultaneously for 5 seconds to lock the keyboard. Press together these two buttons for 2 seconds to unlock the keyboard.

3.1.6 RG10N7(2HS)/BGEF(Standard for BREEZELESS E series)

Remote Controller Specifications

Model	RG10N7(2HS)/BGEF
Rated Voltage	3.0V (Dry batteries R03/LR03×2)
Reaching Distance	8m
Environment Temperature Range	-5°C~60°C(23°F~140°F)

Buttons and Functions

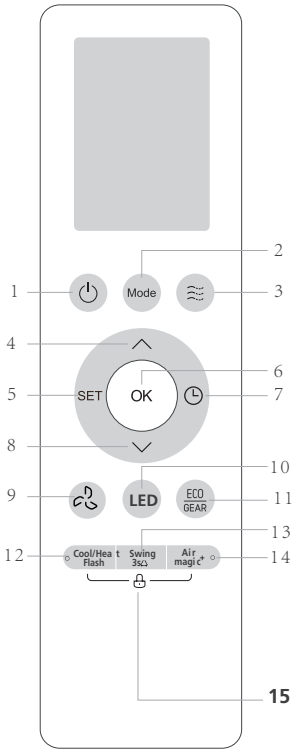

	Description
No.1	ON/OFF Turn the unit on or off.
No.2	**MODE** **Auto > Cool > Dry > Heat > Fa n** **NOTE: HEAT mode is not supported by the cooling onl y appliance.**
No.3	**BREEZE** **Breezeless > Breeze away > Breeze mild>Stop**
No.4	**TEMP.** **Increases temperature in 0.5°C (1°F) increments. Max. temperature is 30°C (86°F).** **(Press together & uttons at the same time for 3 seconds will alternate the temperature display between the °C & °F) .**
No.5	**SET** **Active clean>Sleep > Follow Me > AP mode > Active clea n**
No.6	OK **Used to con☒rm the selected functions**
No.7	**TIMER** Set timer to turn unit on or off
No.8	**TEMP.** **Decreases temperature in 0.5°C (1°F) increments. Min. temperature is 16°C (60°F)**
No.9	**FAN SPEED** **AU > 20% > 40% >60% > 80% > 100%** **Press the TEMP r utton to increase/ decrease the fan speed in 1% increments.**
No.10	**LED** Turns LED display & air conditioner buzzer on and off
No.11	**ECO/GEA R** **E CO > GEAR(75%) > GEAR(50%) > Previous setting mode > EC O**
No.12	**Cool/Heat Flash** **Reduce(cool mode) or rise(heat mode) temperature in a short time .**
No.13	**SWIN G** **Starts and stops the horizontal louver movement. Hold down for 3 seconds to initiate vertical louver auto swing feature(some units) .**
No.14	**Air magic+** **Used to start/stop the Air magic and UV-C lamp (if any) function.**
No.15	Cool/Heat Flash — Air magic + **LOCK** **Press together these two buttons simultaneously for 5 seconds to lock the keyboard. Press together these two buttons for 2 seconds to unlock the keyboard .**

Product Features

3.2 LCD Wired Remote Controller

3.2.1 LCD Wired Remote Controller KJR-12B/DP(T)

The KJR-12B/DP(T) wired remote controller is standard for A6 duct type.

i) Buttons and Functions

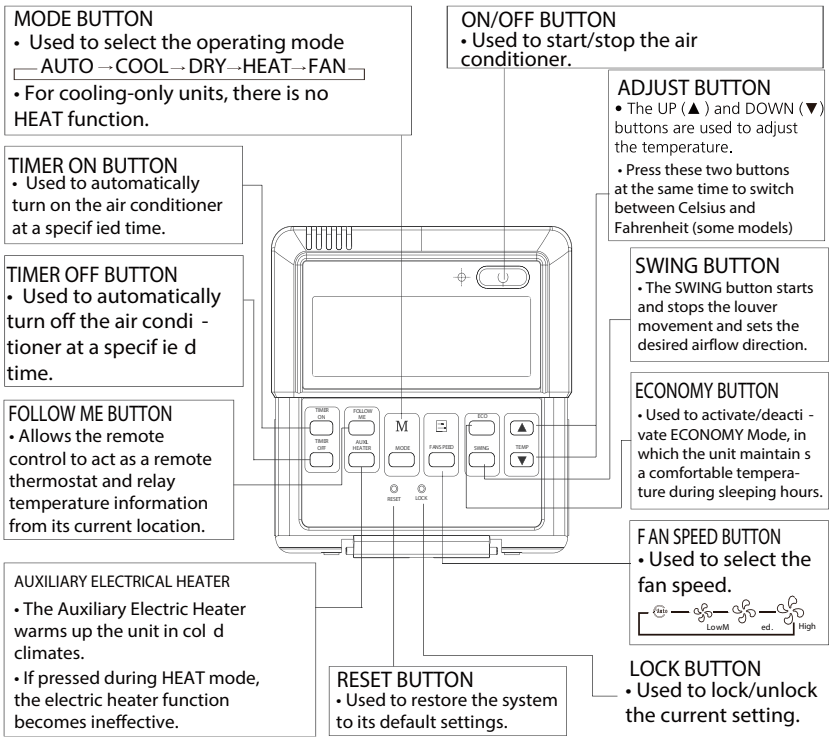

ii) LCD Screen

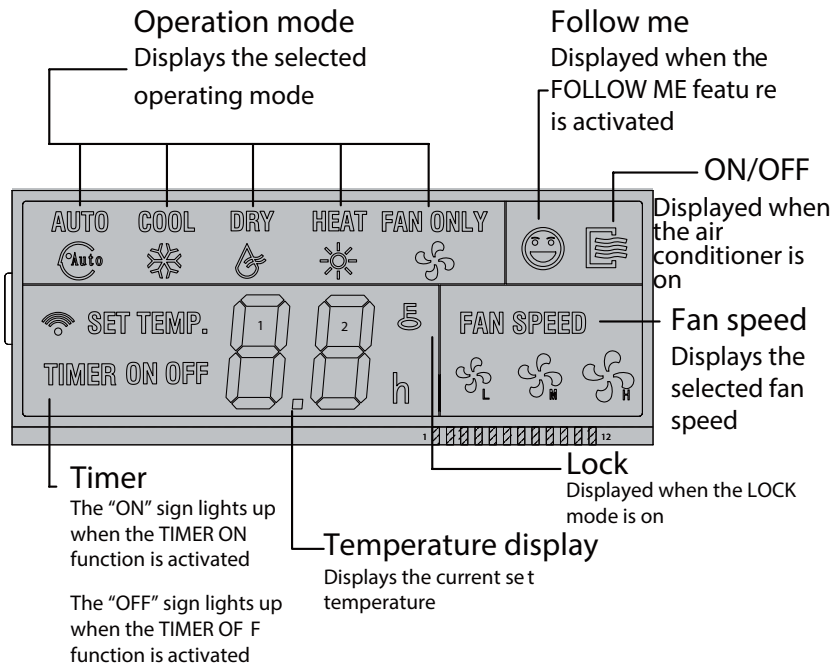

iii) Installation

- **Dimensions**

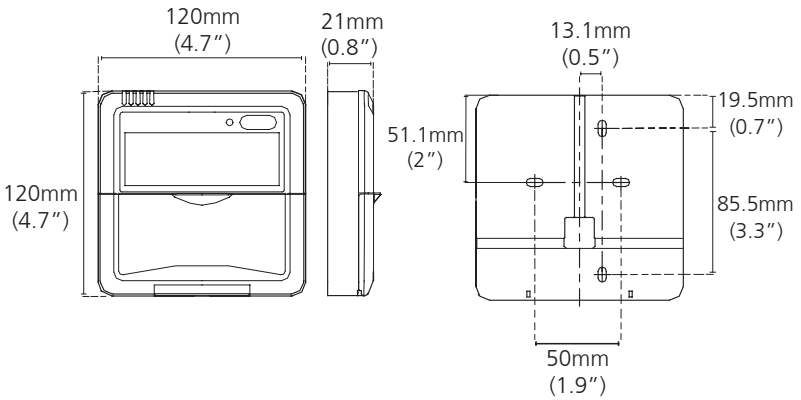

- **Wiring diagram**

Refer to the following diagram to wire the Wall mounted Type remote control to the indoor unit.

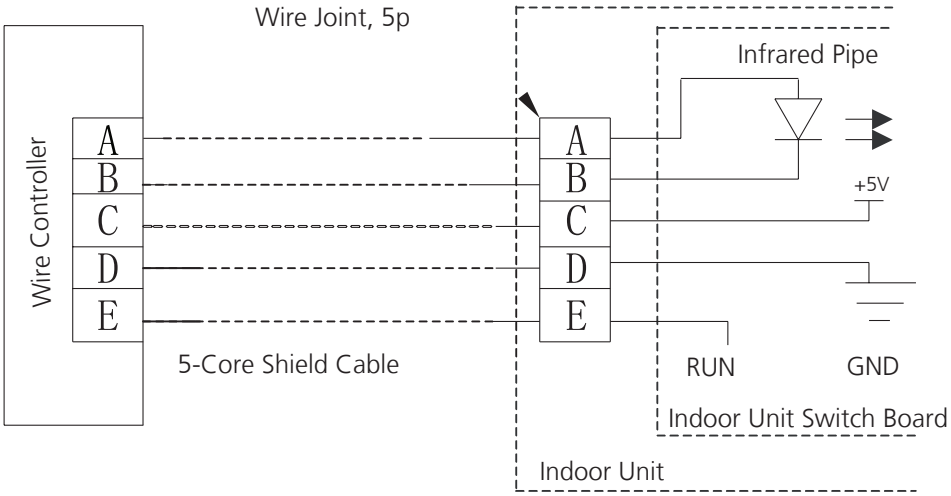

- **Installation Diagram**

Connect the wire from the display panel of the indoor unit to a connecting cable. Then connect the other side of the connecting cable to the remote control.

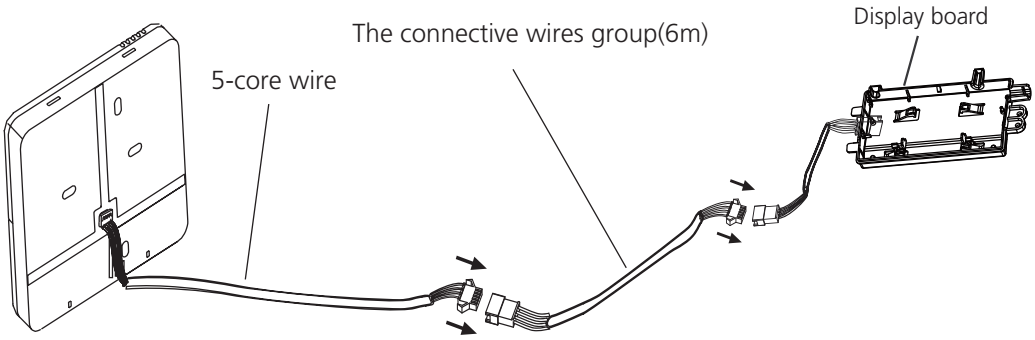

Note: Be sure to reserve a length of the connecting wire for periodic maintenance.

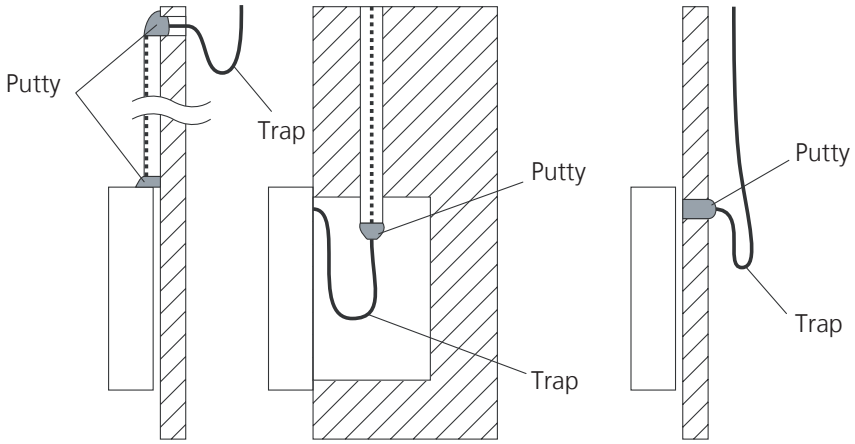

Note: DO NOT allow water to enter the remote control. Use the trap and putty to seal the wires.

- **For exposed mounting, cut holes on four of the sides according to the picture below.**

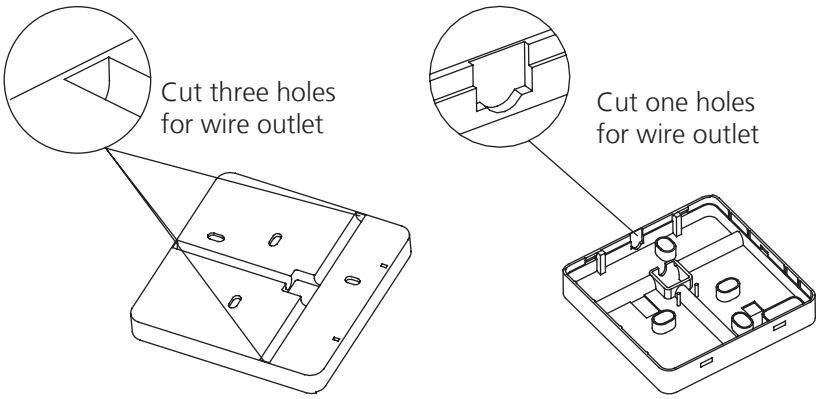

- **For shielded wiring, please refer to the picture below.**

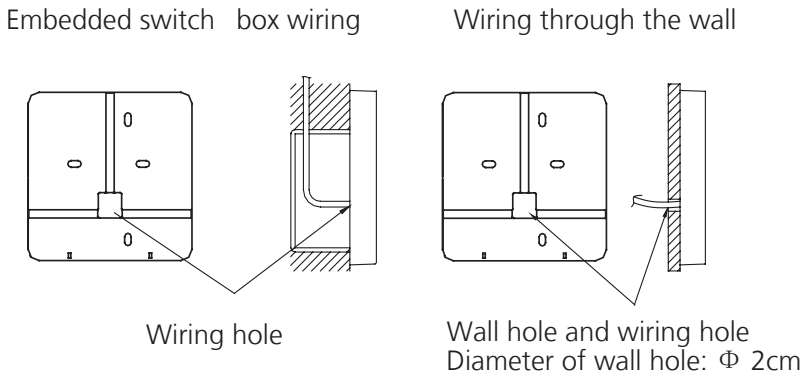

3.2.2 LCD Wired Remote Controller KJR-120L/F-E

The KJR-120L/F-E wired remote controller is standard for A7 duct type.

i) Buttons and Functions

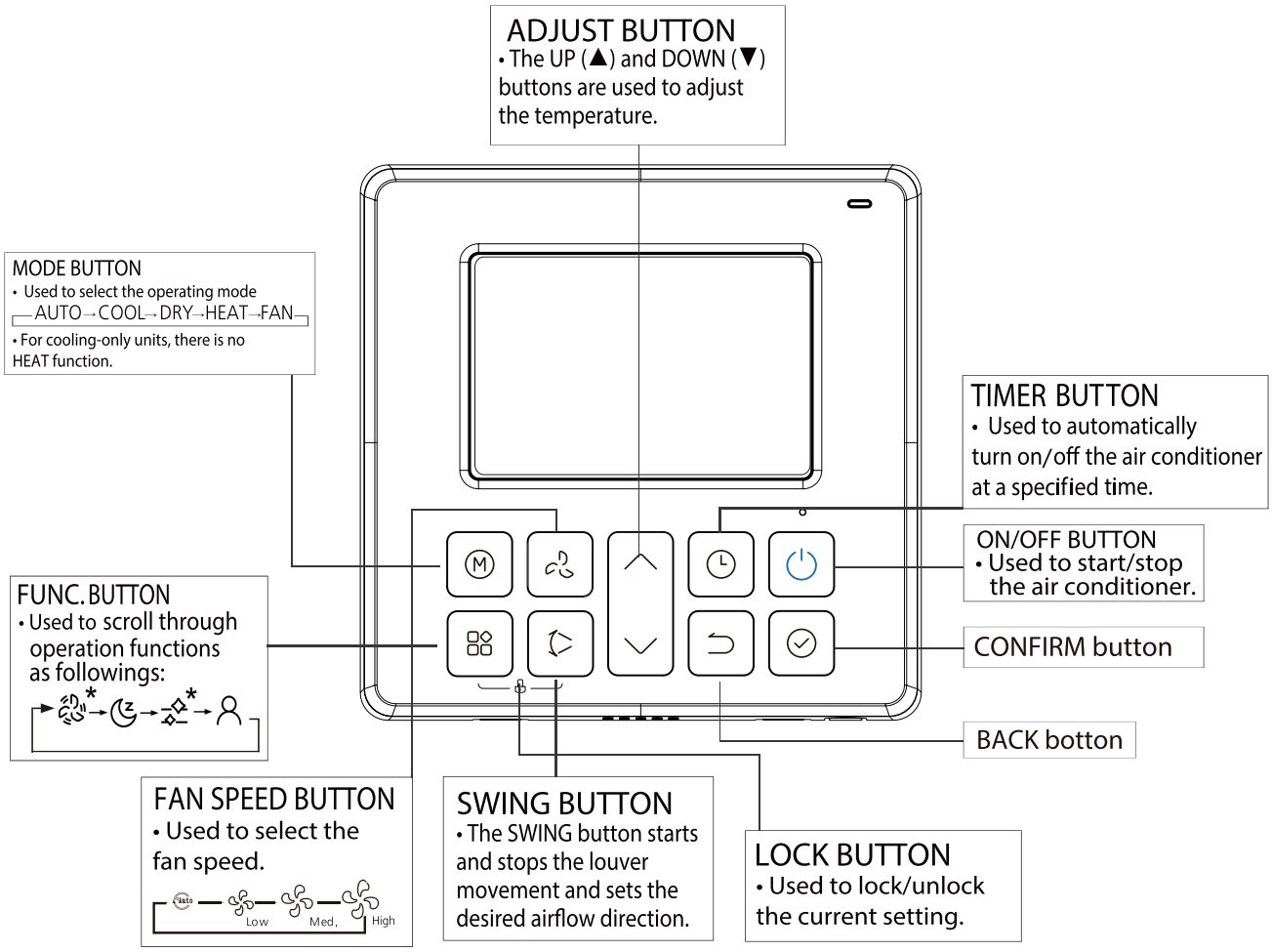

ii) LCD Screen

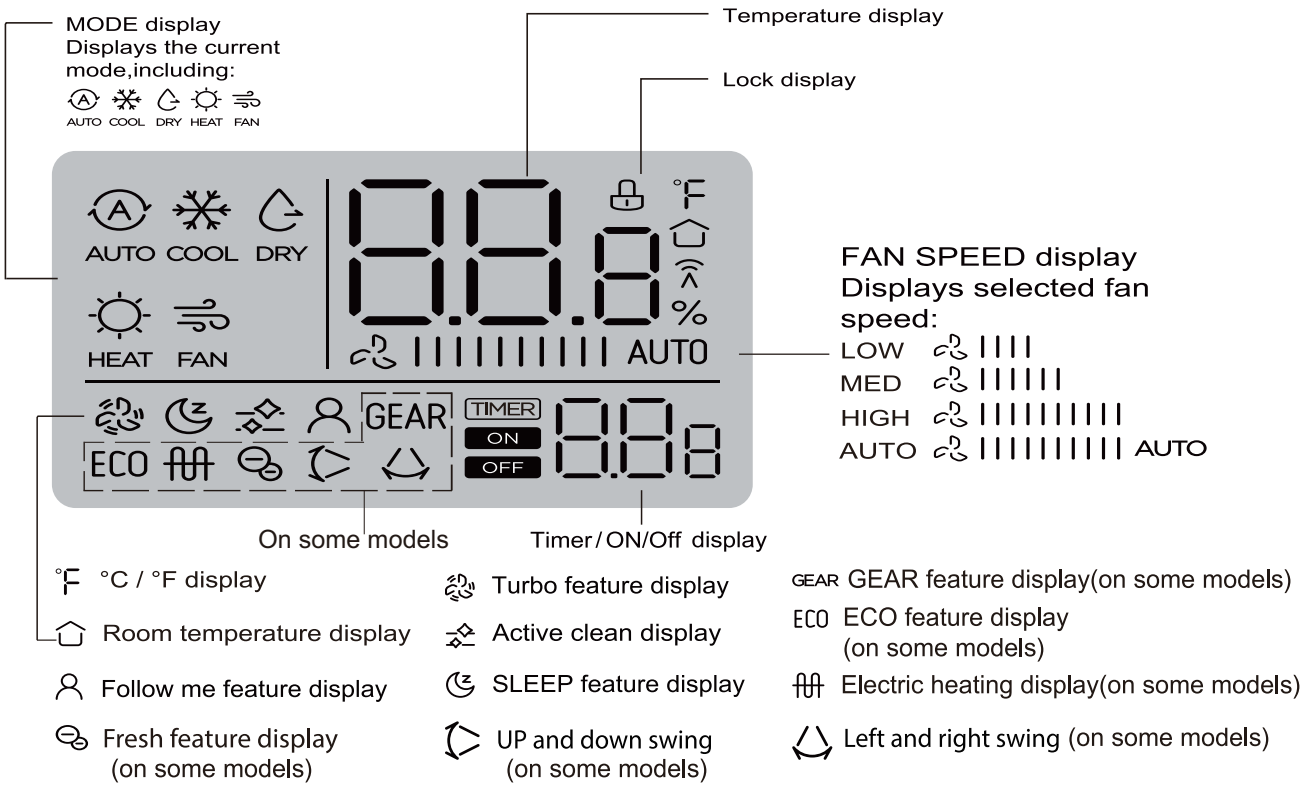

iii) Installation

- **Dimensions**

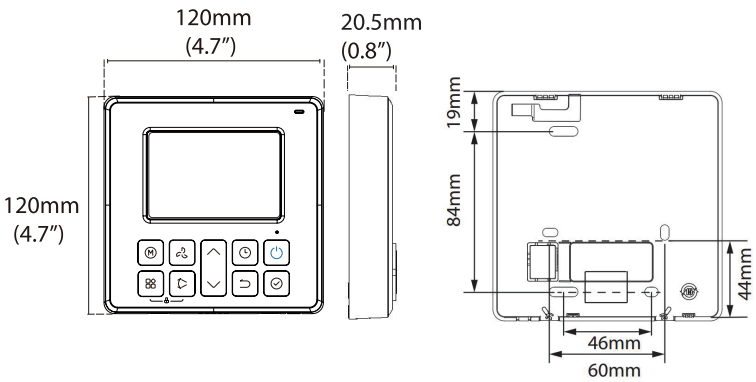

- **Wiring diagram**

Refer to the following diagram to wire the wall-mounted remote control to the indoor unit.

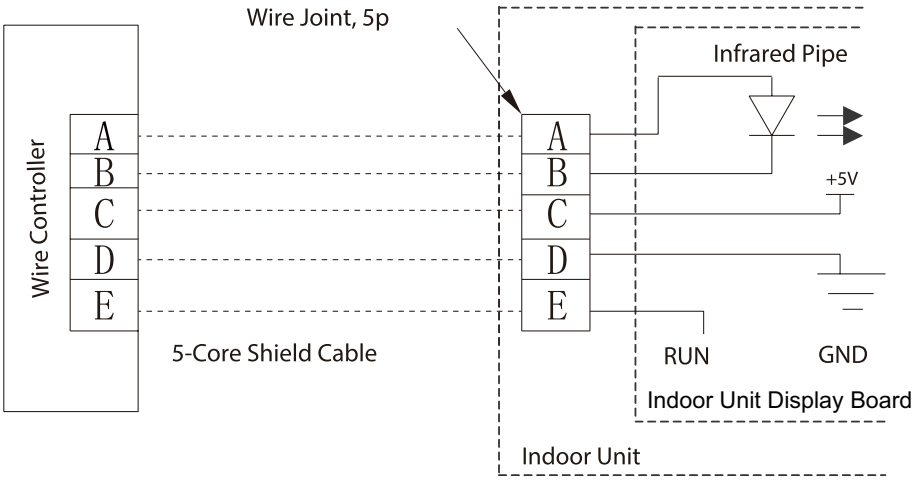

- **Installation Diagram**

Connect the wire from the display panel of the indoor unit to a connecting cable. Then connect the other side of the connecting cable to the remote control.

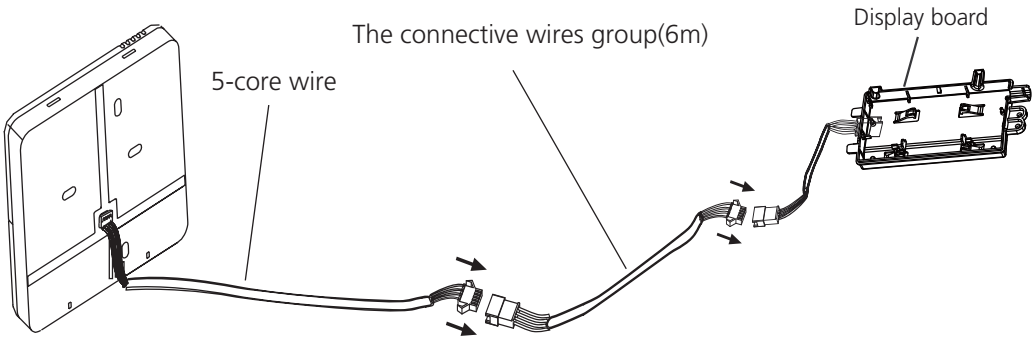

Note: Be sure to reserve a length of the connecting wire for periodic maintenance.

If there is a connection lug at the end of shielded wire, the connection lug should be properly grounded.

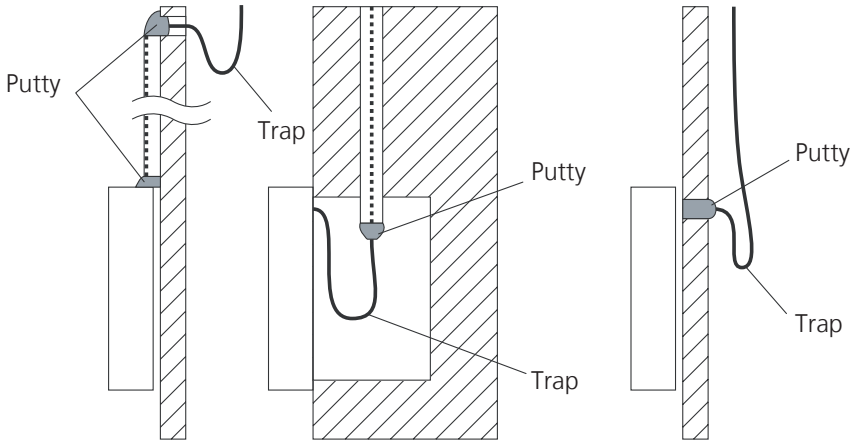

Note: DO NOT allow water to enter the remote control. Use the trap and putty to seal the wires.

- **For exposed mounting, cut holes on four of the sides according to the picture below.**

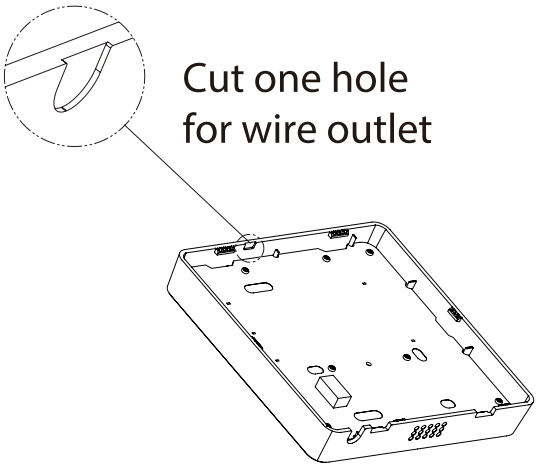

- **For shielded wiring, please refer to the picture below.**

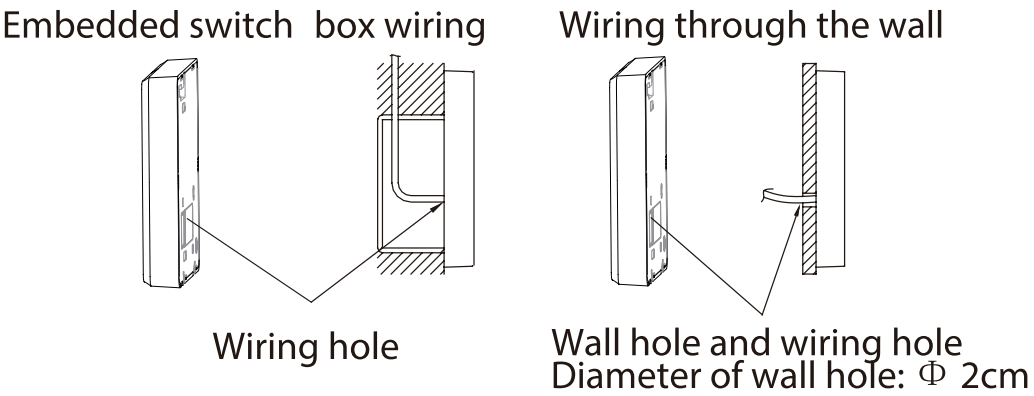

3.2.3 LCD Wired Remote Controller KJR-120C/TF-E(Optional)

The KJR-120C/TF-E wired remote controller is optional for some Types.

i) Buttons and Functions

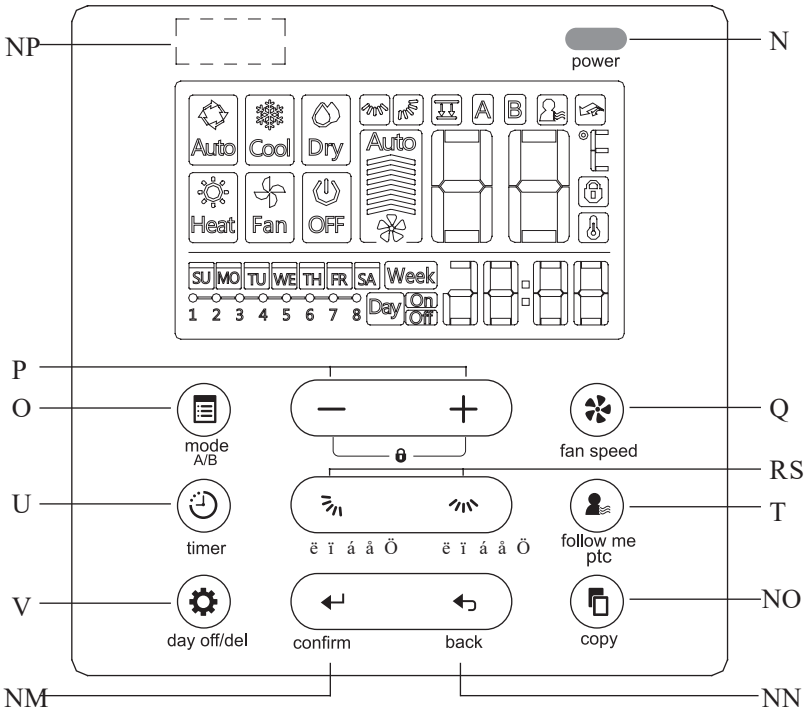

1. POWER button

Turn on of turn off the unit.

2. MODE(A/B) button

Used to select the operation mode: Auto / Cooling / Drying / Heating / Fan;

Hold to active the operation of auto-lifting panel when off

3. Adjust button

To set temperature, time and timer; set up or down the auto-lifting panel

4. FAN SPEED button

Used to select the fan speed.

5. Up-down airflow direction and swing Button

Press for adjusting the angel of louver, hold for vertical swing; individual louver control for cassette panel

6. Left-righ airflow swing Button

Press for activing the horizontal swing

7. FOLLOW ME(PTC) button

Allows the remote control to act as a remote thermostat and send temperature information from its current location.

8. TIMER button

To set timer on and timer off time of one day

9. DELAY/DAY OFF button

To set 1 to 2 hours delay off for each day or a whole day off in a weekly timer schedule

10. CONFIRM button

To confirm an setting or call up the menu

11. BACK button

Back to previous operation or superior menu

12. COPY button

Copy timer setting of one day to another in weekly schedule setting

13 Infrared remote receiver (on some models)

ii) LCD Screen

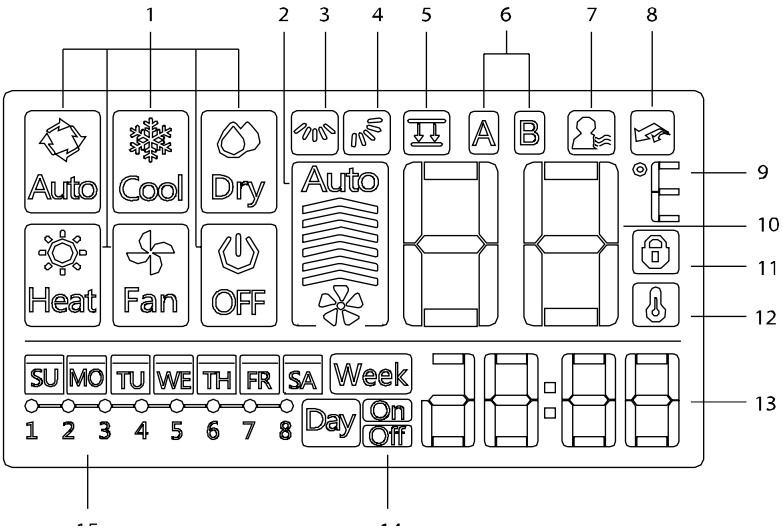

1 Operation mode indication

2 Fan speed indication

3 Left-right swing indication

4 Up-down swing indication

5 Faceplate function indication

6 Main unit and secondary unit indication

7 Follow me function indication

8 PTC function indication

9 C° / F° indication

10 Temperature display

11 Lock indication

12 Room temperature indication

13 Clock display

14 On/Off timer

15 Timer display

iii) Installation

- **Dimensions**

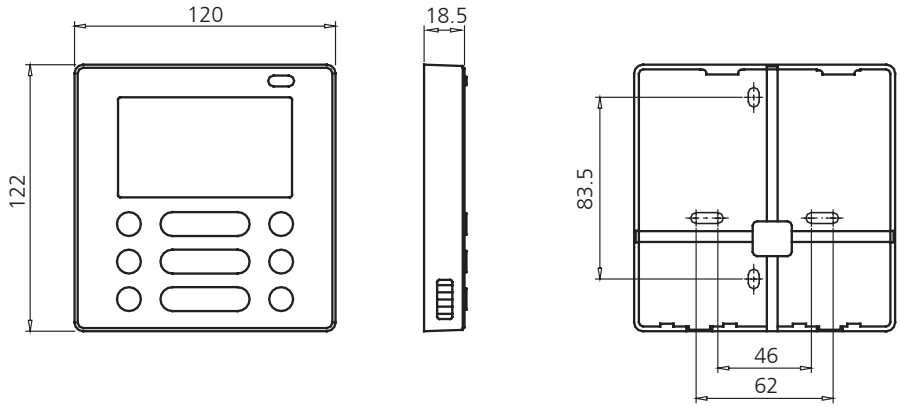

- **Wiring diagram**

Refer to the following diagram to wire the Wall mounted Type remote control to the indoor unit.

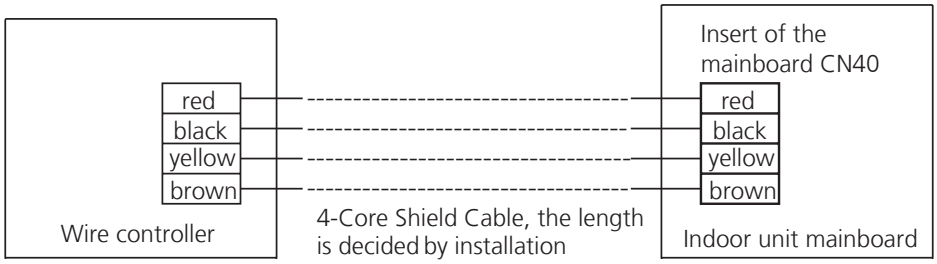

- **Installation Diagram**

Connect the female joint of wires group from the mainboard with the male joint of connective wires group. Then connect the other side of connective wires group with the male joint of wires group leads from wire controller.

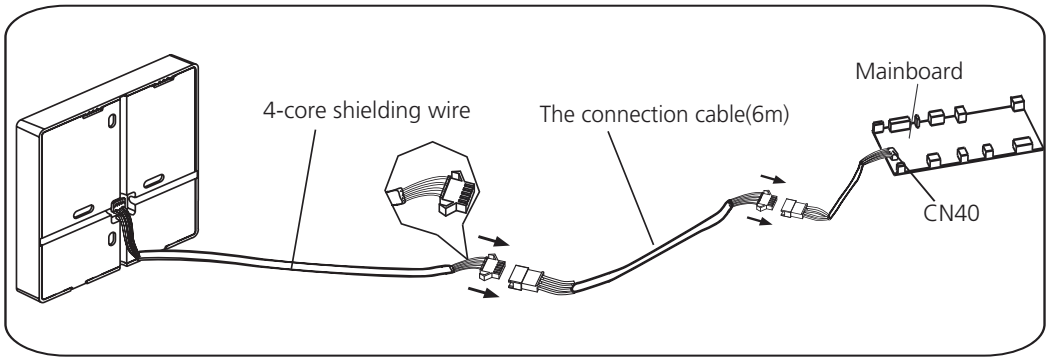

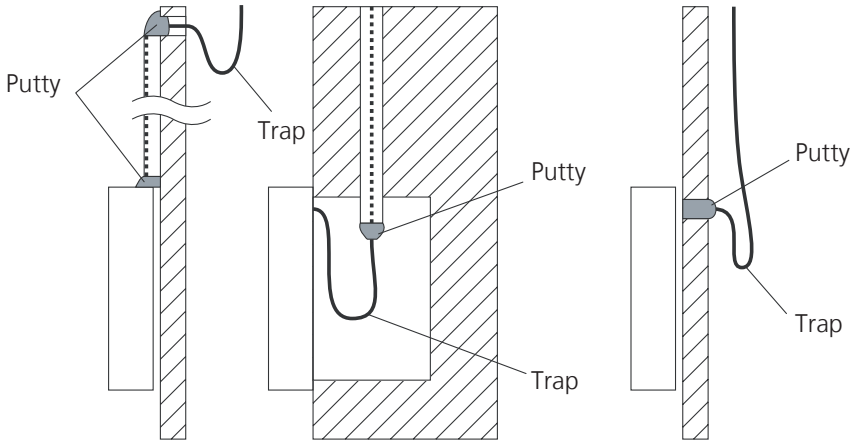

Note: DO NOT allow water to enter the remote control. Use the trap and putty to seal the wires.

- **For exposed mounting, four outletting positions. There are three need cutting.**

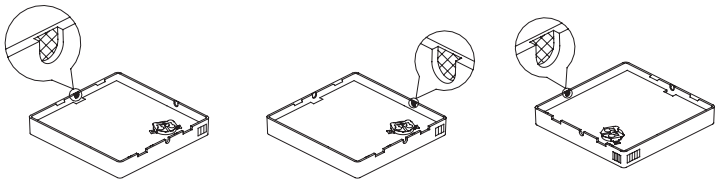

Cutting place of top side wire outlet

Cutting place of left side wire outlet

Cutting place of right side wire outlet

- **For shielded wiring, please refer to the picture below.**

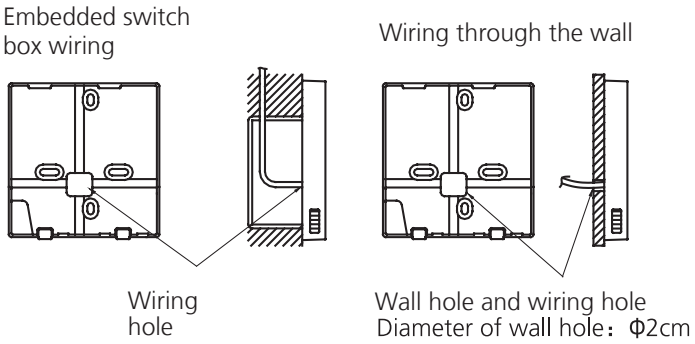

3.2.4 LCD Wired Remote Controller KJR-120G/TF-E(Optional)

The KJR-120G/TF-E wired remote controller is optional for some Types.

i) Buttons and Functions

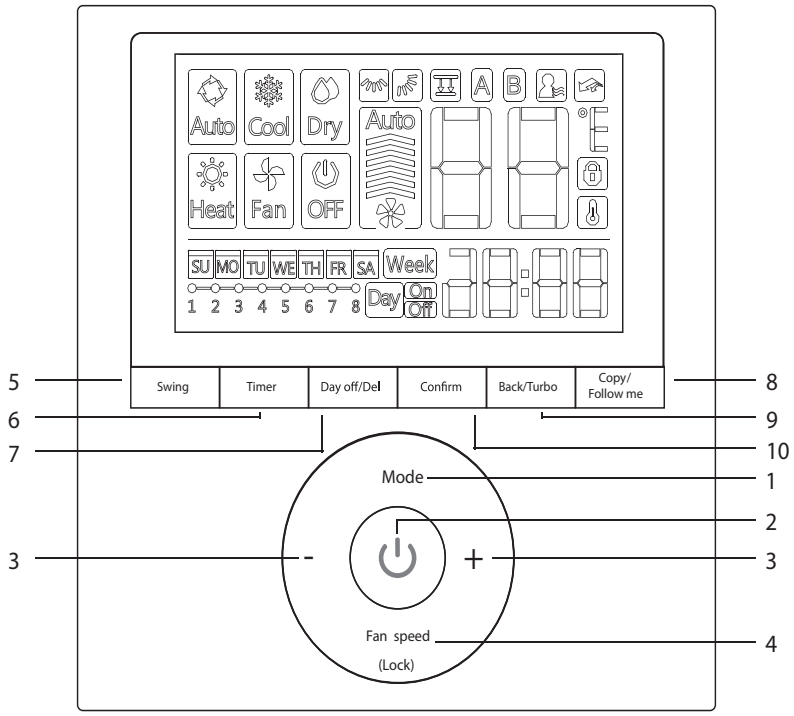

1 MODE button

Used to select the operation mode: Auto / Cooling / Drying / Heating / Fan;

Hold to active the operation of auto-lifting panel when off

2. POWER button

Turn on of turn off the unit.

3. Adjust button

To set temperature, time and timer; set up or down the auto-lifting panel

4. FAN SPEED button

Used to select the fan speed.

5. Swing Button

Press to active vertical swing, hold for horizontal swing

6. TIMER button

To set timer on and timer off time of one day

7.DELAY/DAY OFF button

To set 1 to 2 hours delay off for each day or a whole day off in a weekly timer schedule

8. COPY/FOLLOW ME button

To copy timer setting of one day to another in weekly schedule setting;

To active the follow me function while in normal operation.

9. BACK/TURBO button

Back to previous operation or superior menu

To active turbo mode while in normal operation

10. CONFIRM button

To confirm an setting or call up the superior menu

ii) LCD Screen

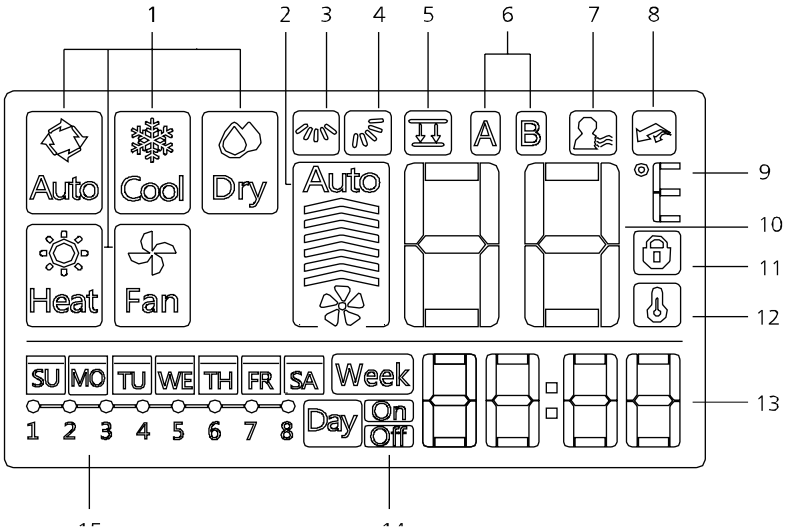

1 Operation mode indication

2 Fan speed indication

3 Left-right swing indication

4 Up-down swing indication

5 Faceplate function indication

6 Main unit and secondary unit indication

7 Follow me function indication

8 Turbo/PTC function indication

9 C° / F° indication

10 Temperature display

11 Lock indication

12 Room temperature indication

13 Clock display

14 On/Off timer

15 Timer display

iii) Installation

- **Dimensions**

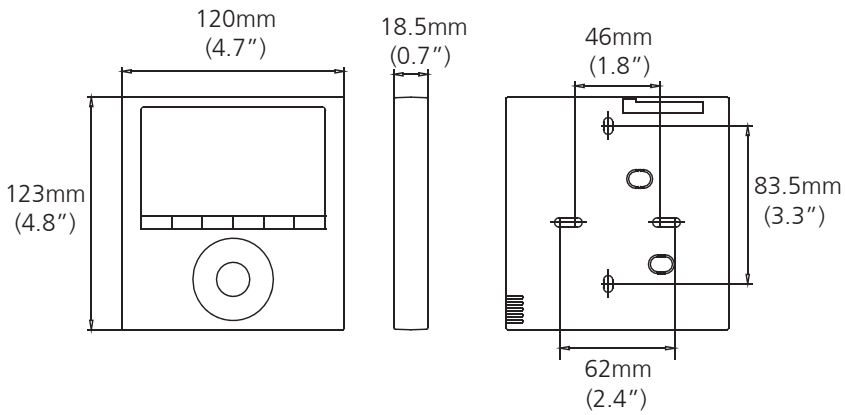

- **Wiring diagram**

1) Connection

For Cassette Type: The wired controller connects to main control board directly.

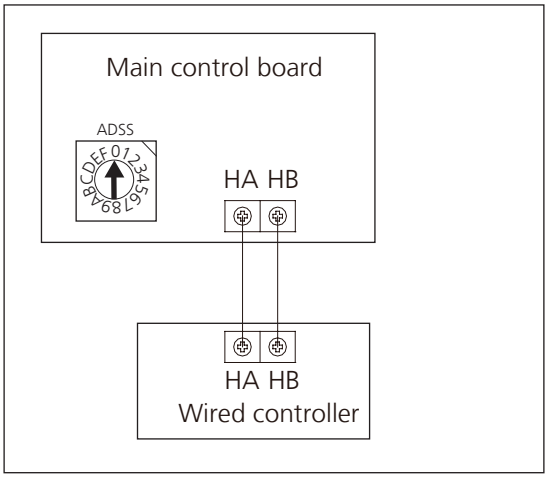

For Duct, Ceiling& floor: The wired controller connects to terminal board, terminal board connects to main control board.

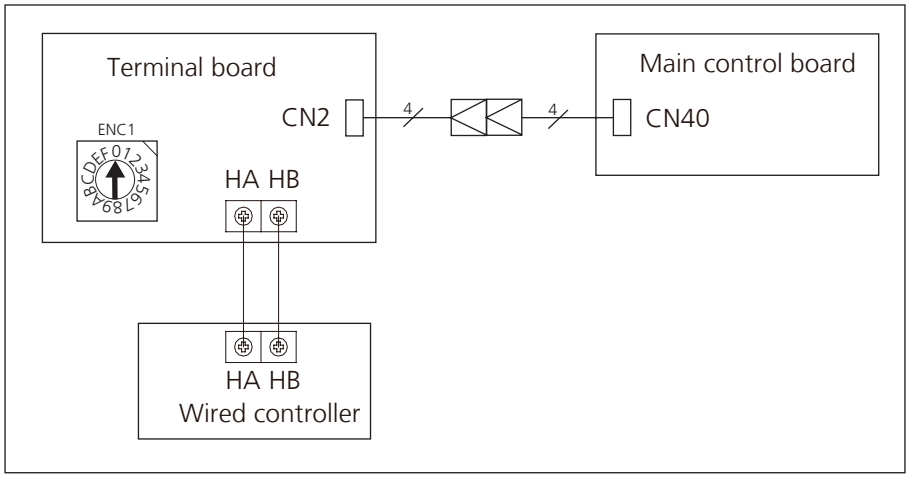

2) Address setting

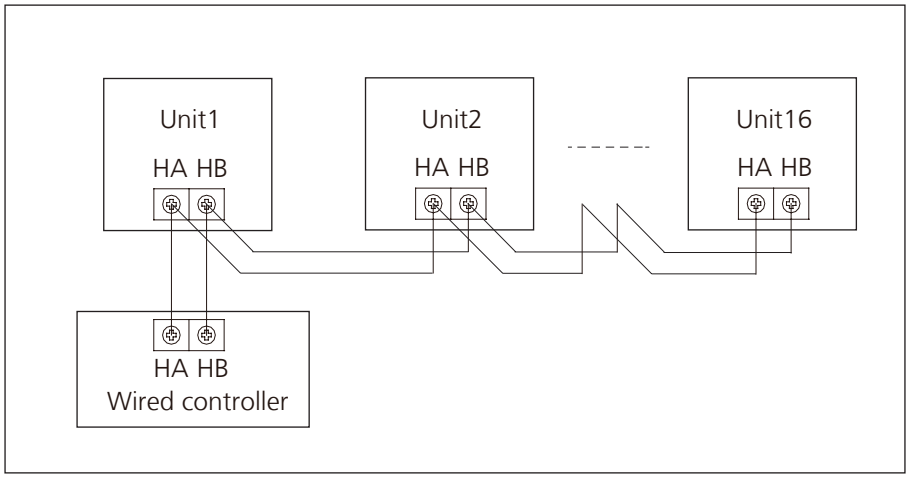

a. One non-polarity controller can control up to 16 indoor units.

b. When the non-polarity controller is connected to several units, every air-conditioner in network has only one network address to distinguish each other.

c. Address code of air-conditioner in LAN is set by code switch ENC1(Duct and Ceiling& Floor) or ADSS(Cassette) of the indoor unit, and the set range is 0-15.

d. Note: The indoor units are controlled at the same time, not independently. The purpose of setting network address is identify the unit when error occurs.

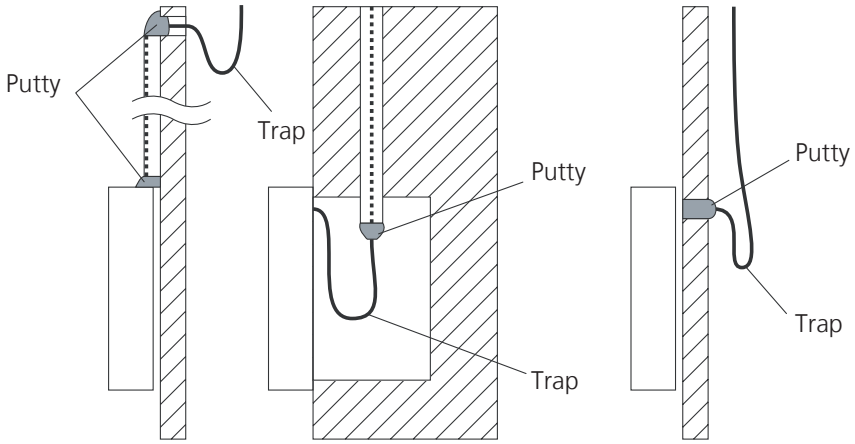

Note: DO NOT allow water to enter the remote control. Use the trap and putty to seal the wires.

- **For wiring the indoor unit, there are three methods:**
  - From the rear;
  - From the bottom;
  - From the top;
  - From the top center.

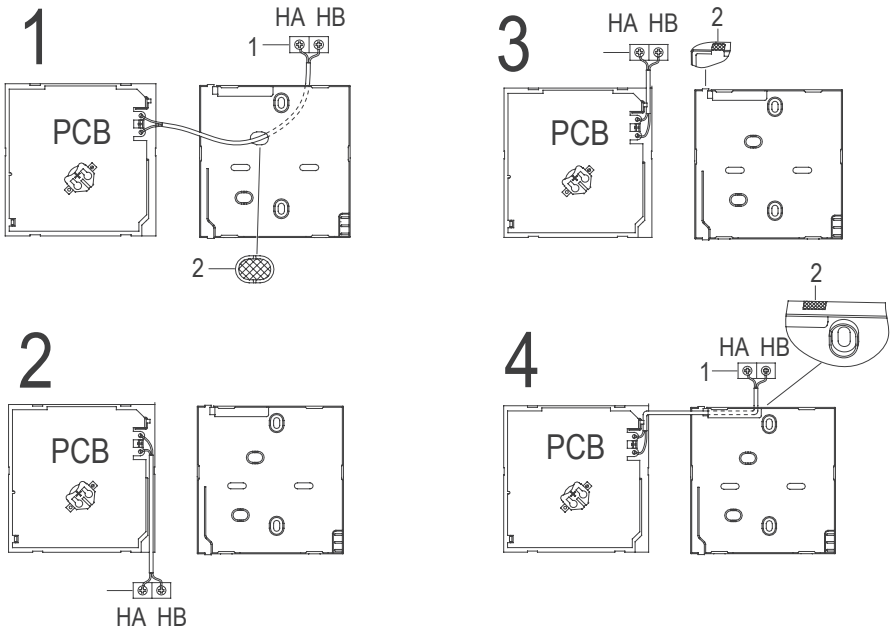

- 1: Indoor Unit.
- 2: Notch the part for the wiring to pass through with a nipper tool.
- Connect the terminals on the remote controller (HA ,HB), and the terminals of the indoor unit. (HA ,HB). (HA and HB do not have polarity.)

3.3 Centralized Controller

1) Connection

For Light commercial air conditioner with XYE port, it can be directly connected to Centralized Controller (CCM03, CCM09).

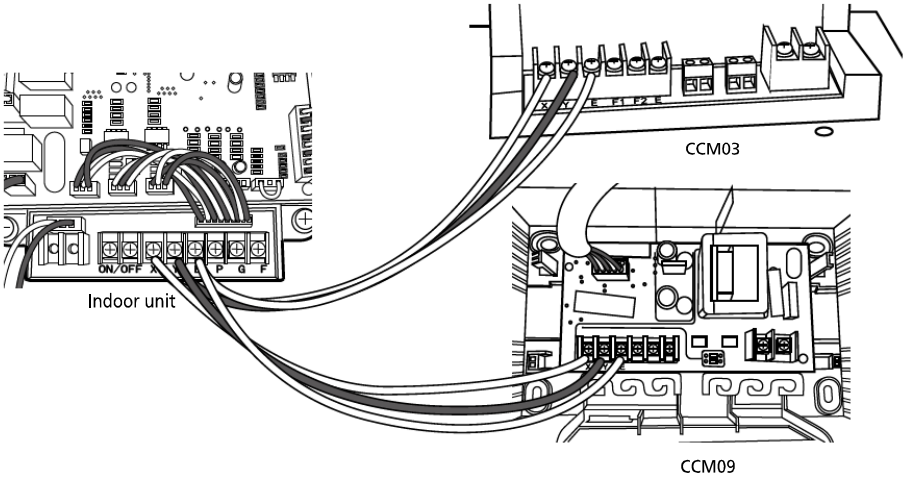

2) Address setting

When setting the address, please make sure the unit is powered off. The address can be set from 0 to 63 by the switch. Turn on the unit, then the address will be effective.

SWITCH	FOR CCM UNIT ADDRESS	
S2 + S1	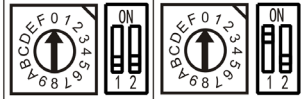	
ADDRESS	0~15	16~31
Factory Setting	✓	
S2 + S1	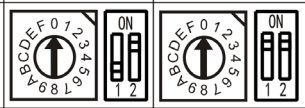	
ADDRESS	32~47	48~63
Factory Setting		

Note: For light commercial aire conditioner with XYE port, it can be also connected to BMS (Building Management System).

If there is any CAC (central air conditioner) connecting with the central controller at the same time, please set the address from largest (63,62,61…), since the CAC units could obtain address automatically from the smallest (00,01,02…)

3.4 Using the wire controller to set static pressure airflow

- You can use the unit's automatic airflow adjustment function to set external static pressure.
- Automatic airflow adjustment is the volume of blow-off air that has been automatically adjusted to the quantity rated.

1. Make sure the test run is done with a dry coil. If the coil is not dry, run the unit for 2 hours in FAN ONLY mode to dry the coil.

2. Check that both power supply wiring and duct installation have been completed. Check that any closing dampers are open. Check that the air filter is properly attached to the air suction side passage of the unit.

3. If there is more than one air inlet and outlet, adjust the dampers so that the airflow rate of each air inlet and outlet conforms with the designed airflow rate. Make sure the unit is in FAN ONLY mode. Press and set the airflow adjustment button on the remote control to change the airflow rate from H or L.

4. Set the parameters for automatic airflow adjustment. When the air conditioning unit is off, perform the following steps:

- When the unit is turned off, hold the MODE button and FAN button down together for three seconds. ("AF" indicator flashes for 3 times.)(for 12B wired controller) or long press COPY button for 3 seconds(for 120X/120G/120C/120M/120N wired controller).

- Press " △ " or " ▽ " to select the AF.

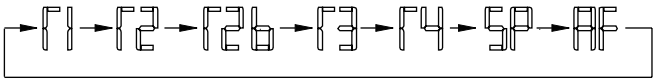

- Press "MODE". The air conditioning unit will then start the fan for airflow automatic adjustment.

After 3 to 6 minutes, the air conditioning unit stops operating once automatic airflow adjustment has finished.

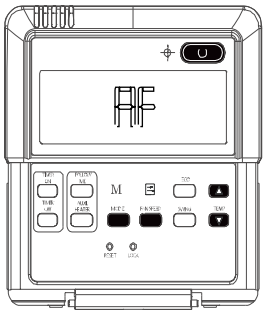

Caution: DO NOT adjust the dampers when automatic airflow adjustment is active.

Caution:

• If there is no change after airflow adjustment in the ventilation paths, be sure to reset automatic airflow adjustment.

• If there is no change to ventilation paths after airflow adjustment,contact your dealer, especially if this occurs after testing the outdoor unit or if the unit has been moved to a different location.

• Do not use automatic airflow adjustment with remote control,if you are using booster fans, outdoor air processing unit, or a HRV via duct.

• If the ventilation paths have been changed, reset airflow automatic adjustment as described from step 3 onwards.

For 120L/120K wired controller, perform the following steps:

- In power-on or standby mode, long press ON/OFF and FAN together for 7 seconds to engineer mode

- Press " △ " or " ▽ " to select the channel "4".

- Press "On/Off" for 2s to enter the Static Pressure Selector, the code displayed is "Ch".

- Press " △ " or " ▽ " to select the AF.

- Press "Confirm" to confirm.

- Press "On/Off" for 2s to exit.

3.5 Using the wire controller to set real-time constant airflow

When the air conditioning unit is off, perform the following steps:

1.Press"MODE" and "FAN" for 3 seconds(for 12B wired controller) or long press COPY button for 3 seconds(for 120X/120G/120C/120M/120N wired controller).

2.Press " △ " or " ▽ " to select the SP.

3.Press "MODE" to set the airflow rate in the range of 0~4.

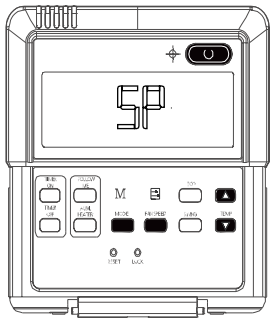

"0": No airflow change

Product Features

"1"~"4":Airflow increase progressively

4. Press " △ " or " ▽ " to confirm airflow rate.(for 120 series wired remote controller, Press "confirm" to confirm airflow rate).

5. Press "ON/OFF" or do not touch the button for 6 minutes to exit the airflow setting.

6. Shut off the power supply and then turn it on.

For 120L/120K wired controller, perform the following steps:

- In power-on or standby mode, long press ON/OFF and FAN together for 7 seconds to engineer mode

- Press " △ " or " ▽ " to select the channel "4"..

- Press "On/Off" for 2s to enter the Static Pressure Selector, the code displayed is "Ch".

- Press " △ " or " ▽ " to select the 0~4.

- Press "Confirm" to confirm.

- Press "On/Off" for 2s to exit.

For A7 Duct type:

When using the 120L wired controller

To set Static Pressure airflow

The factory default setting is SP1, The external static pressure can be manually changed to the fan curves 1,2,3,4,5(7k~12k)/1,2,3,4,5,6,7,8(18k~24k).

a. Press and hold ON/OFF and FAN for approximately 7 seconds.

b. Press "∧" or "∨" to scroll through the menu and select "8".

c. Press and hold ON/OFF for approximately 2 seconds , Press "∧" or "∨" to scroll through and select "1~5"(7k~12k)/"1-8"(18k~24k).

d. Press " " or "OK" and the display board displays "CS".

e. Press and hold ON/OFF and FAN for approximately 2 seconds, Then exit engineer mode.

To set Real-time constant airflow

Use the Automatic Airflow "AF" Adjustment function to realize Real-time constant airflows.

a. Press and hold ON/OFF and FAN for approximately 7 seconds.

b. Press "∧" or "∨" to scroll through the menu and select " 8 ".

c. Press and hold ON/OFF for approximately 2 seconds , Press "∧" or "∨" to scroll through and select "AF".

d. Press " " or "OK" and the display board displays " CS ".

e. Press and hold ON/OFF and FAN for approximately 2 seconds, Then exit engineer mode.

NOTE : Before commissioning, check the power connection of the machine, turn on the power, and keep the machine not working.

NOTE : If there is no change after airflow adjustment, perform the setting again.

When using the 120M wired controller

To set Static Pressure airflow

The factory default setting is SP1, The external static pressure can be manually changed to the fan curves 1,2,3,4,5(7k~12k)/1,2,3,4,5,6,7,8(18k~24k).

a. Press and hold Copy for approximately 3 seconds, The lower right corner shows P:00, Press "OK".

b. Press "∧" to scroll through the menu , The lower right corner shows SP, Press "OK".

c. Press "∧" or "∨" to scroll through the menu and select "1~5"(7k~12k)/"1-8"(18k~24k), Press "OK".

d. Press "Back" to exit engineer mode.

To set Real-time constant airflow

Use the Automatic Airflow "AF" Adjustment function to realize Real-time constant airflows.

a. Press and hold Copy for approximately 3 seconds , The lower right corner shows P:00, Press "OK".

b. Press "∧" to scroll through the menu , The lower right corner shows AF, Press "OK".

c. Press "Back" to exit engineer mode.

NOTE: T1, T2, T2b, T3, T4 are sub-menus for thermistors. DO NOT select to set the external static pressure.

NOTE : Before commissioning, check the power connection of the machine, turn on the power, and keep the machine not working.

NOTE : If there is no change after airflow adjustment, perform the setting again.

NOTE : Setting Static Pressure or Automatic Airflow need to use the Wired Remote Controller.

Installation

Contents

Accessories-A6 Duct Type:

	Name	Shape	Quantity
Tubing & Fittings	Soundproof / insulation sheath	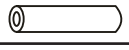	2
	Seal sponge (some models)		1
	Orifice (some models)	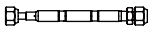	1
Drainpipe Fittings (for cooling & heating)	Drain joint (some models)		1
	Seal ring (some models)		1
EMC Magnetic Ring (some models)	Magnetic ring(Wrap the electric wires S1 & S2 (P & Q & E) around the magnetic ring twice)	 S1&S2(P&Q&E)	1
	Magnetic ring(Hitch on the connective cable between the indoor unit and outdoor unit after installation.)		1
Others	Manual	-	2~4
	Transfer connector(Φ12.7-Φ15.9)/(Φ0.5in-Φ0.63in)(Packed with the indoor unit) NOTE: Pipe size may differ from appliance to appliance. To meet different pipe size requirements, sometimes the pipe connections need a transfer connector installed on the outdoor unit.	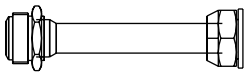	1 (on some models)
	Transfer connector(Φ6.35-Φ9.52)/(Φ0.25in-Φ0.375in)(Packed with the indoor unit) NOTE: Pipe size may differ from appliance to appliance. To meet different pipe size requirements, sometimes the pipe connections need a transfer connector installed on the outdoor unit.	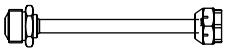	1 (on some models)
	Transfer connector(Φ9.52-Φ12.7)/(Φ0.375in-Φ0.5in)(Packed with the indoor unit) NOTE: Pipe size may differ from appliance to appliance. To meet different pipe size requirements, sometimes the pipe connections need a transfer connector installed on the outdoor unit.	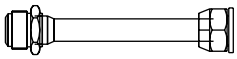	1 (on some models)
	Connecting wire for display (2m)	-	1(on some models)
	Cord protection rubber ring		1(on some models)
	Display panel *Just for testing purposes only	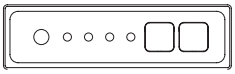	1(on some models-KJR-120G,KJR-120H)

Optional accessories:

- There are two Types of remote controls: wired and wireless.
- Select a remote controller based on customer preferences and requirements and install in an appropriate place.
- Refer to catalogues and technical literature for guidance on selecting a suitable remote controller.
-

Accessories-A7 Duct Type:

Name	Shape	Quantity
Manual		2-4
Refirgenout in/out pipe protection cover	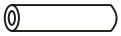	2
Copper nut		2
Wired remote controller(with packing)		1
Outlet pipe sheath (some models)		1
Outlet pipe clasp (some models)		1-2
Drain joint & Seal ring (some models)	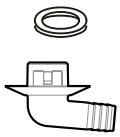	1
Remote controller (some models)	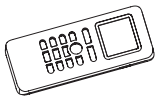	1
Connecting wire for display (2m)	-	1(on some models)
Magnetic ring(Wrap the electric wires S1 & S2 (P & Q & E) around the magnetic ring twice) (some models)	 S1&S2(P&Q&E)	1
Magnetic ring(Hitch on the connective cable between the indoor unit and outdoor unit after installation.)		Varies by model
Cord protection rubber ring(some models)		1
Display panel *Just for testing purposes only	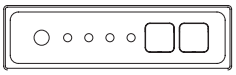	1(on some models-KJR-120G,KJR-120H)

Optional accessories:

- There are two types of remote controls: wired and wireless.
- Select a remote controller based on customer preferences and requirements and install in an appropriate place.
- Refer to catalogues and technical literature for guidance on selecting a suitable remote controller.

Accessories-Compact cassette Type & New 4-way Cassette Type:

	Name	Shape	Quantity
Indoor unit installation	Installation paper template (some models)	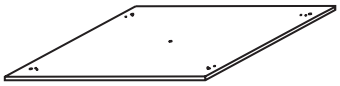	1
Refrigeration Fittings	Soundproof/insulation sheath (some models)		1
Drainpipe Fittings	Outlet pipe sheath(some models)		1
	Outlet pipe clasp(some models)		1
	Drain joint (some models)	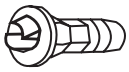	1
	Seal ring (some models)		1
Installation Accessory (some models)	Ceiling hook	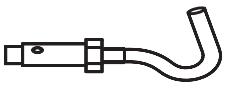	4
	Copper nut(some units) Used to make the connective pipes between indoor and outdoor units.		
	Suspension bolt		4
	Orifice tube (some units)	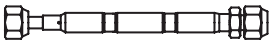	1
	Anti-shock rubber		1
EMC Magnetic Ring (some models)	Magnetic ring (wrap the electric wires S1 & S2 (P & Q & E) around the magnetic ring twice)	 S1&S2(P&Q&E)	1
	Magnetic ring (Hitch it on the connective cable between indoor unit and outdoor unit after installation.)	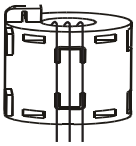	1
Others	Manual	-	2~4

Optional accessories:

- There are two Types of remote controls: wired and wireless.
- Select a remote controller based on customer preferences and requirements and install in an appropriate place.
- Refer to catalogues and technical literature for guidance on selecting a suitable remote controller.

Accessories-Console Type:

The air conditioning system comes with the following accessories. Use all of the installation parts and accessories to install the air conditioner. Improper installation may result in water leakage, electrical shock and fire, or equipment failure.

Name	Shape	Quantity
Remote controller		1
Battery (some models)		2
Wired remote controller(some models)		1
Manual	-	2-4
Air freshening filter (some models)		2
Soundproof/insulation sheath (some models)		2
Heat insulation pipe		1
Anchor		6(depending on models)
Mounting plate fixing screw		6(depending on models)
Copper nut		2
Hook		2
Drain joint (some models)		1
Seal ring (some models)		1
Magnetic ring (wrap the electric wires S1 & S2 (P & Q & E) around the magnetic ring twice)	S1&S2(P&Q&E)	1
Magnetic ring (Hitch on the connective cable between the indoor unit and outdoor unit after installation.)(some models)		1

Transfer connector(Φ12.7-Φ15.9)/(Φ0.5in-Φ0.63in)(Packed with the indoor unit) NOTE: Pipe size may differ from appliance to appliance. To meet different pipe size requirements, sometimes the pipe connections need a transfer connector installed on the outdoor unit .	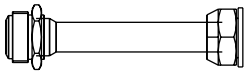	1 (on some models)
Transfer connector(Φ6.35-Φ9.52)/(Φ0.25in-Φ0.37in)(Packed with the indoor unit) NOTE: Pipe size may differ from appliance to appliance. To meet different pipe size requirements, sometimes the pipe connections need a transfer connector installed on the outdoor unit .	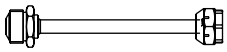	1 (on some models)
Transfer connector(Φ9.52-Φ12.7)/(Φ0.375in-Φ0.5in)(Packed with the indoor unit) NOTE: Pipe size may differ from appliance to appliance. To meet different pipe size requirements, sometimes the pipe connections need a transfer connector installed on the outdoor unit .	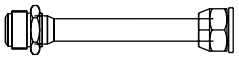	1 (on some models)
Red short connected wire (Applied to the W/L pin of outdoor unit terminal block be short-circuited.)	-	1 (on some models)

Optional accessories:

- There are two Types of remote controls: wired and wireless.
- Select a remote controller based on customer preferences and requirements and install in an appropriate place.
- Refer to catalogues and technical literature for guidance on selecting a suitable remote controller.

Accessories-wall-mounted Type

Name	Shape	Quantity	
Mounting plate		1	
Clip anchor		5	
Mounting plate fixing screw ST3.9 X 25		5	
Remote controller		1	
Fixing screw for remote controller holder ST2.9 x 10		2	Optional Parts
Remote controller holder		1	
Dry battery AAA.LR03		2	
Seal		1(for cooling & heating models only)	
Drain joint			
Manual	Manual	2~3	
Small Filter(Need to be installed on the back of main air filter by the authorized technician while installing the machine)			1~2(depending on models)
Copper nut(for some units) (Used to connect the connecting pipes between indoor and outdoor units.)			2
Cable clamp(For some units only) During on-site wiring, if choose outdoor power supply and the wire diameter decreases, this cable clamp needs to be used to replace the cable clamp already installed in the wire box in order to crimp the wire tightly.			1

Connecting pipe assembly	Liquid side	Φ6.35 (1/4in)	Parts you must purchase. Consult the dealer about the pipe size.
		Φ9.52 (3/8in)	
	Gas side	Φ9.52 (3/8in)	
		Φ12.7 (1/2in)	
		Φ15.9 (5/8in)	

1. Installation Overview

Installation Order-A6 Duct Type

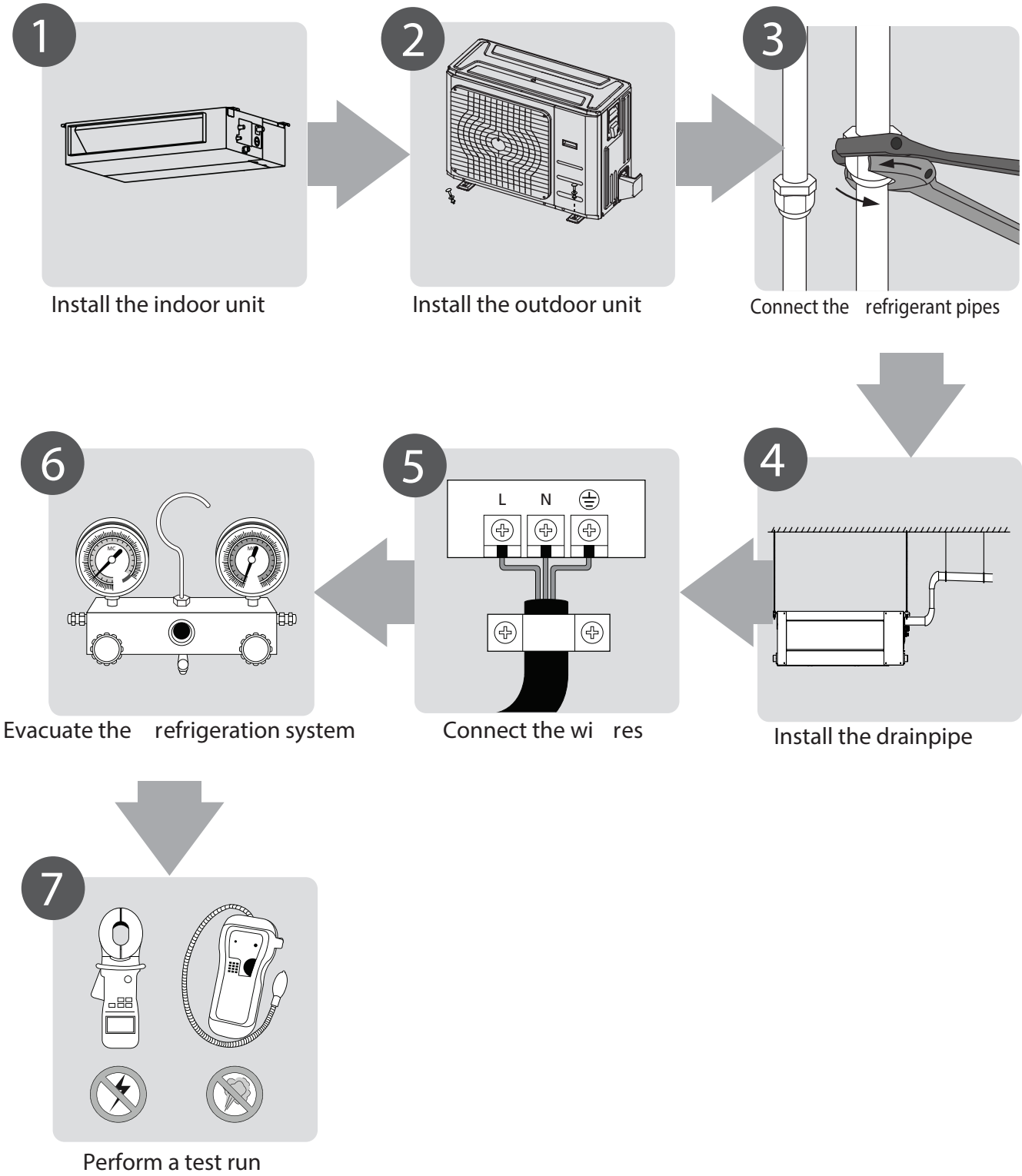

Installation Order-Compact cassette Type

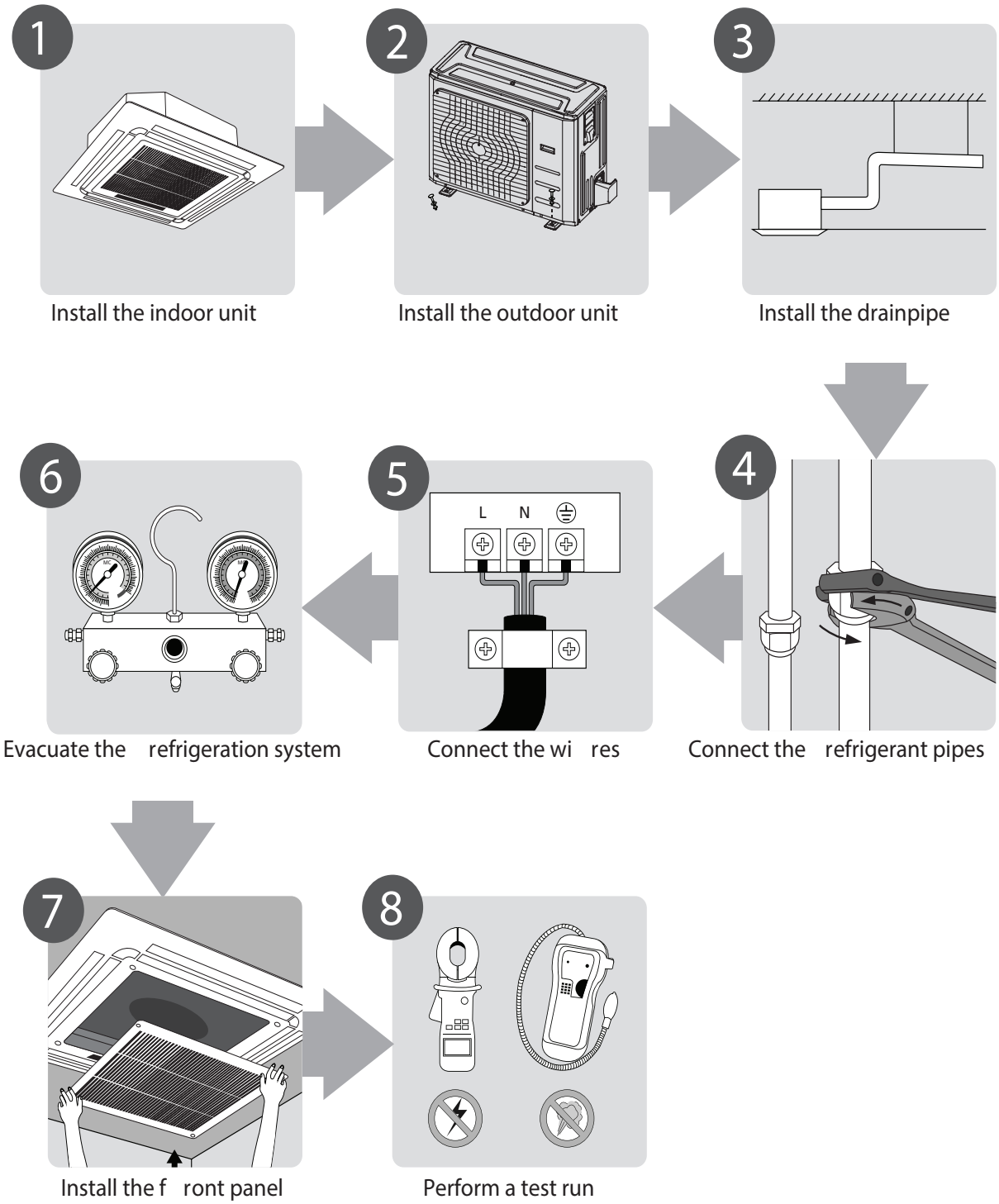

Installation Order-Wall mounted Type

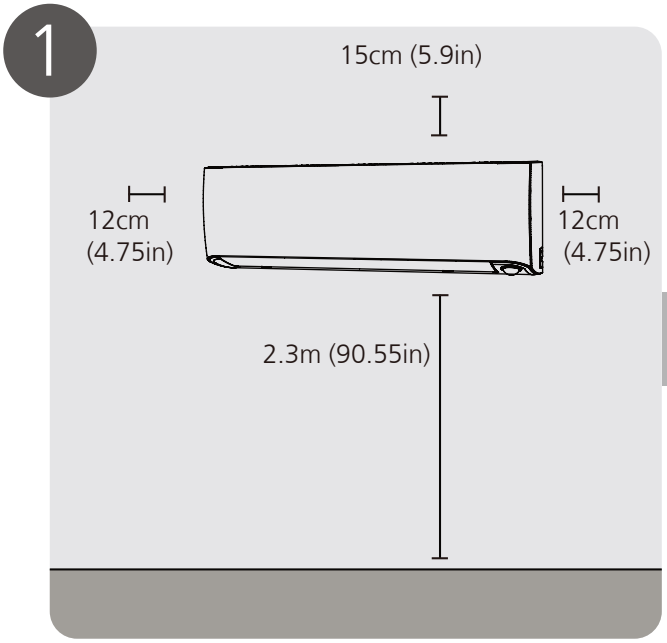

Select Installation Location

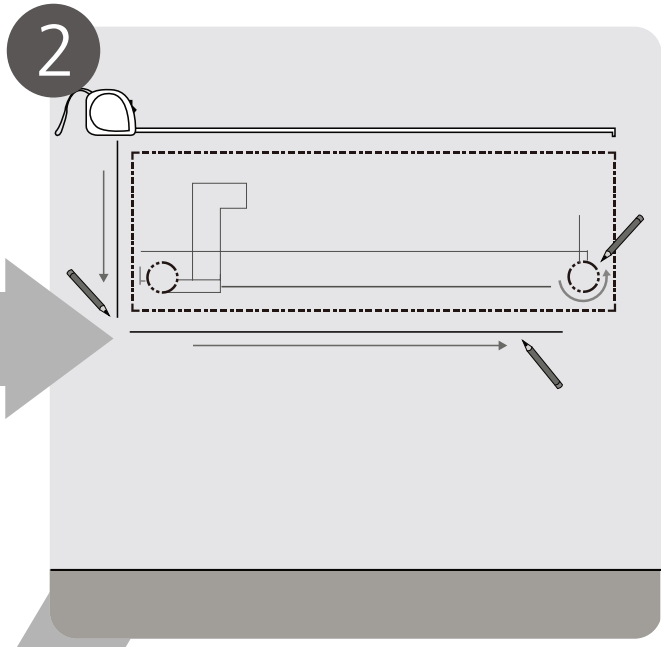

Determine Wall Hole Position

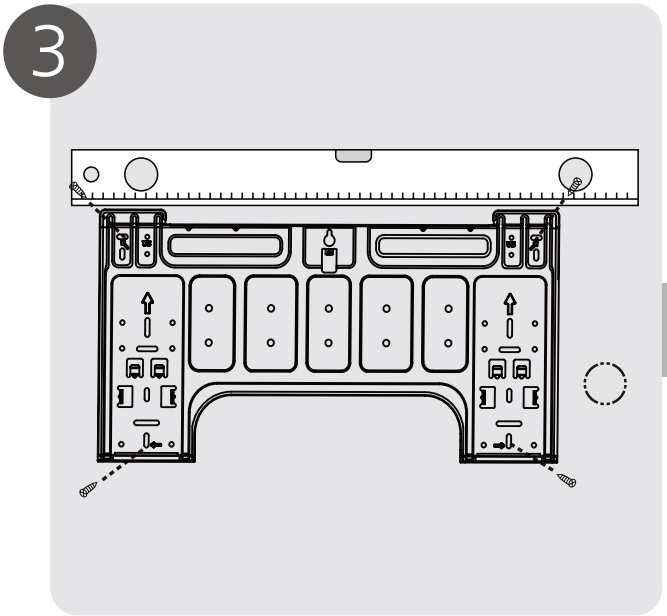

Attach Mounting Plate

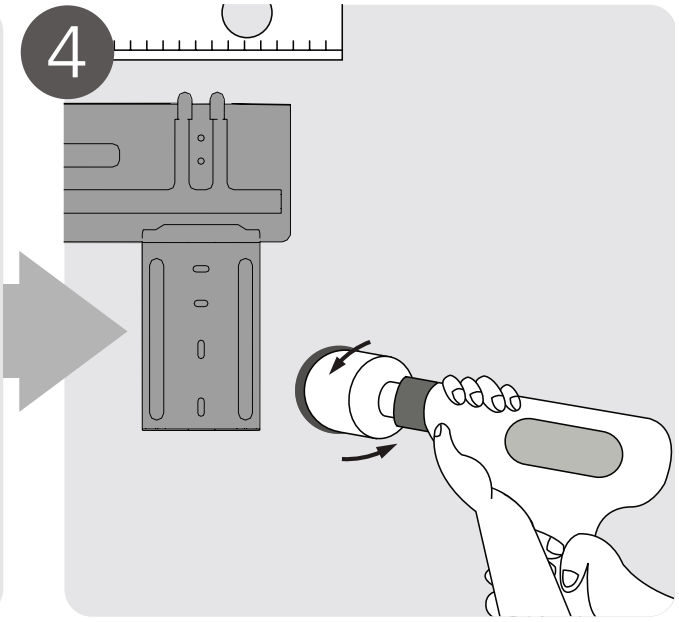

Drill Wall Hole

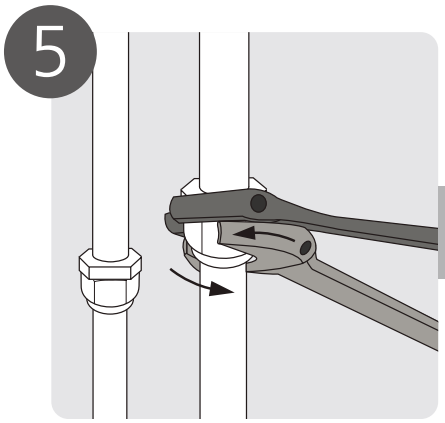

Connect Piping

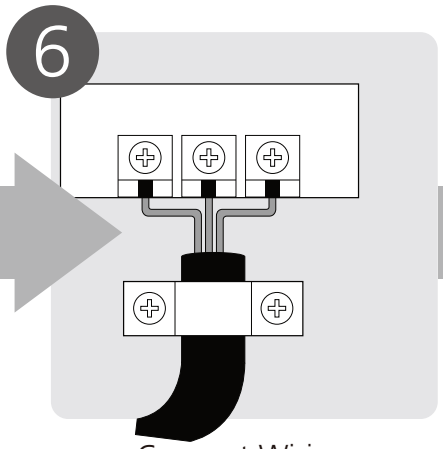

Connect Wiring

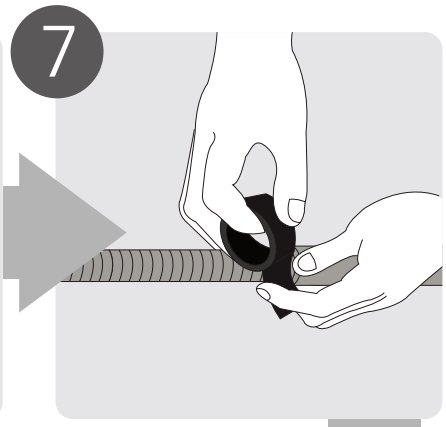

Prepare Refrigerant piping

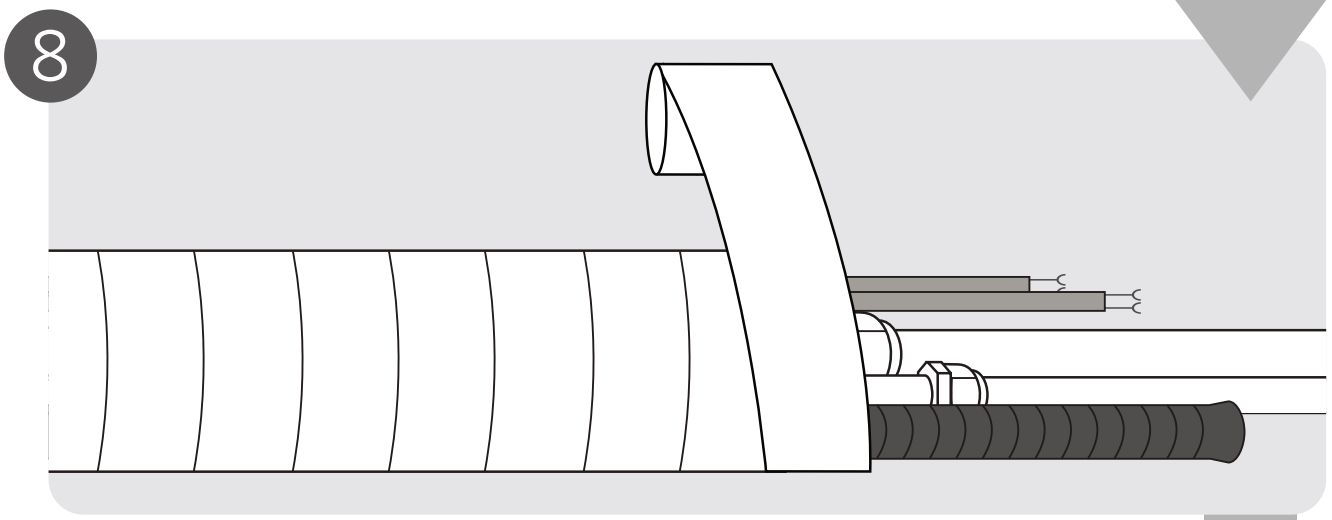

Wrap Piping and Cable
(not applicable for some locations in the US)

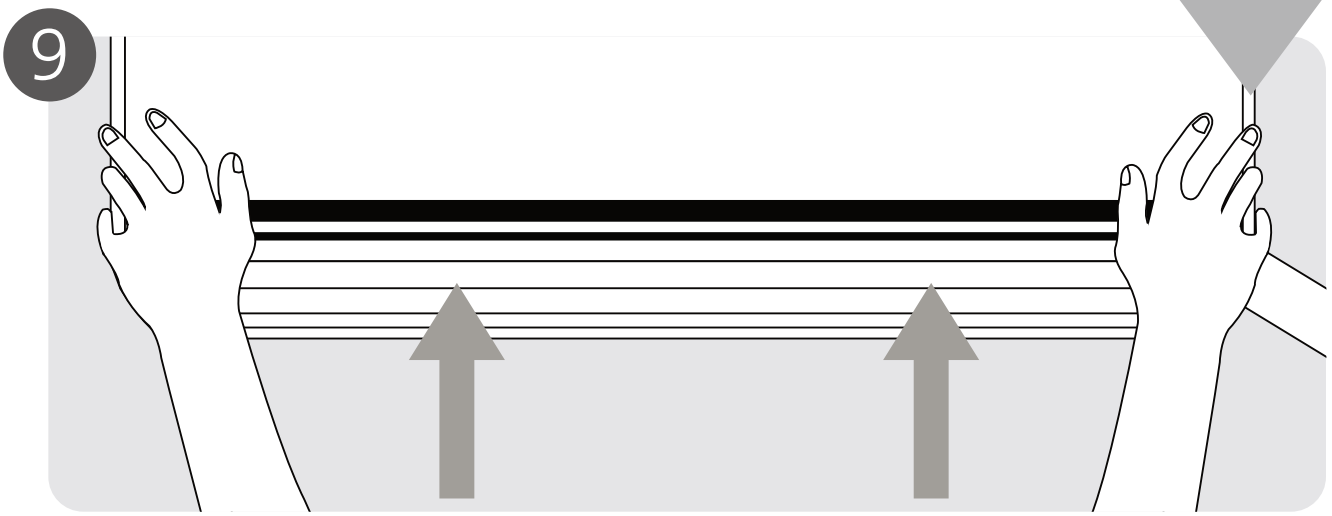

Mount Indoor Unit

2. Location selection

2.1 Unit location selection can refer to installation manual.

2.2 DO NOT install the unit in the following locations:

- Where oil drilling or fracking is taking place.
- Coastal areas with high salt content in the air.
- Areas with caustic gases in the air, such as near hot springs.
- Areas with power fluctuations, such as factories.
- Enclosed spaces, such as cabinets.
- Areas with strong electromagnetic waves.
- Areas that store flammable materials or gas.
- Rooms with high humidity, such as bathrooms or laundry rooms.
- If possible, DO NOT install the unit where it is exposed to direct sunlight.

2.3 The minimum distance between the outdoor unit and walls described in the installation guide does not apply to airtight rooms. Be sure to keep the unit unobstructed in at least two of the three directions (M, N, P)

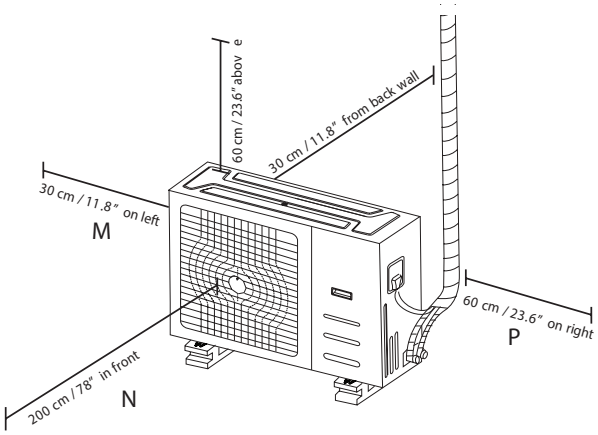

2.4 Rows of series installation

The relations between H, A and L are as follows.

	L	A
L ≤ H	L ≤ 1/2H	25 cm / 9.8" or more
	1/2H < L ≤ H	30 cm / 11.8" or more
L > H	Can not be installed	

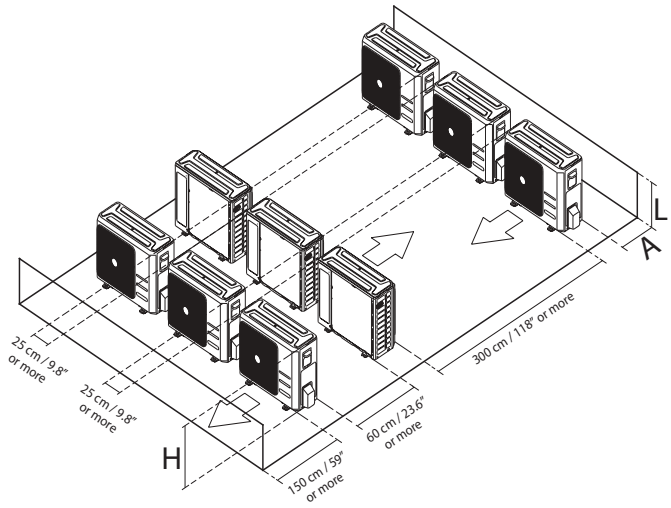

DO NOT install the rows of series like following figure.

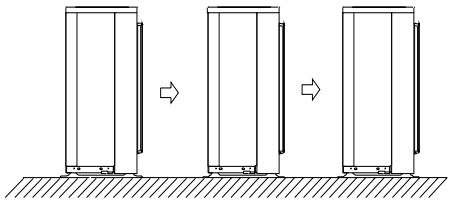

2.5 If the location is exposed to strong winds (for example: near a seaside), the unit must be placed against the wall to shelter it from the wind. If necessary, use an awning.

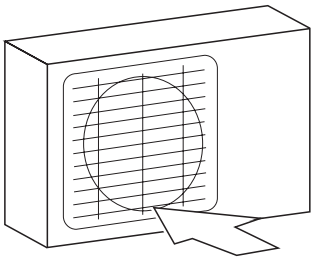

DO NOT Strong wind

3. Indoor Unit Installation(A6 Duct Type)

3.1 Service space for indoor unit

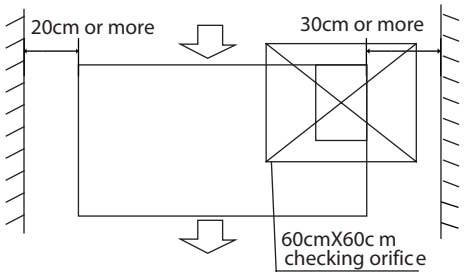

3.2 Hang Indoor Unit

1.Please refer to the following diagrams to locate the four positioning screw bolt hole on the ceiling. Be sure to mark the areas where ceiling hook holes will be drilled.

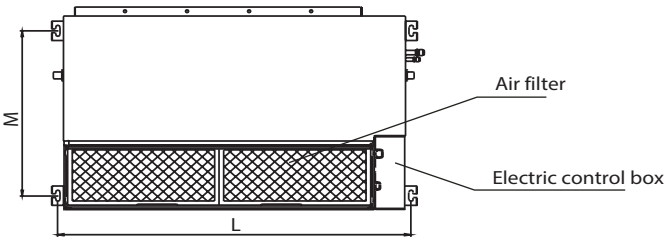

Capacity(Btu/h)	Size of mounted plug	
	L	M
7k/9k/12k	741	360
18k	920	508

2. Install and fit pipes and wires after you have finished installing the main body. When choosing where to start, determine the direction of the pipes to be drawn out.

Especially in cases where there is a ceiling involved, align the refrigerant pipes, drain pipes, and indoor and outdoor lines with their connection points before mounting the unit..

3. Install hanging screw bolts.

1) Cut off the roof beam.

2) Strengthen the point at which the cut was made. Consolidate the roof beam..

4. After you select an installation location,align the refrigerant pipes, drain pipes, as well as indoor and outdoor wires with their connection points before mounting the unit..

5. Drill 4 holes 10cm (4") deep at the ceiling hook positions in the internal ceiling. Be sure to hold the drill at a 90° angle to the ceiling.

6. Secure the bolt using the included washers and nuts.

7. Install the four suspension bolts.

8. Mount the indoor unit with at least two people to lift and secure it. Insert suspension bolts into the unit's hanging holes. Fasten them using the washers and nuts provided.

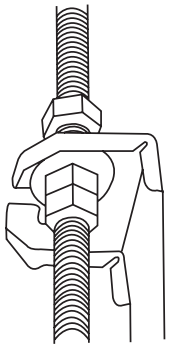

9. Mount the indoor unit onto the hanging screw bolts with a block. Position the indoor unit flat using a level indicator to prevent leaks.

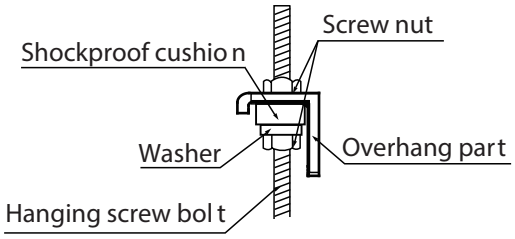

Note: Confirm the minimum drain tilt is 1/100 or more.

3.3 Duct and accessories installation

1. Install the filter(optional) according to air inlet size.

2. Install the canvas tie-in between the body and duct.

3. The air inlet and air outlet duct should be far enough apart enough to a avoid air passage short-circuit.

4. Connect the duct according to the following diagram.

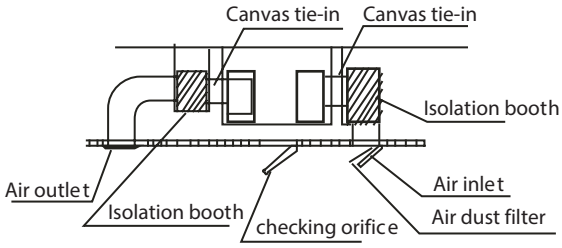

5. Refer to the following static pressure guidelines when installing the indoor unit.

Capacity(Btu/h)	Static Pressure(Pa)
7k/9k	0-40
12k	0-60
18k	0-100

Change the fan motor static pressure according to external duct static pressure.

NOTE: 1. Do not put the connecting duct weight on the indoor unit.

2. When connecting duct, use inflammable canvas tie-in to prevent vibrating.

3. Insulation foam must be wrapped outside the duct to avoid condensate. An internal duct underlayer can be added to reduce noise, if the end-user requires.

3.4 Adjust the air inlet direction(From rear side to under-side.)

1. Take off ventilation panel and flange,

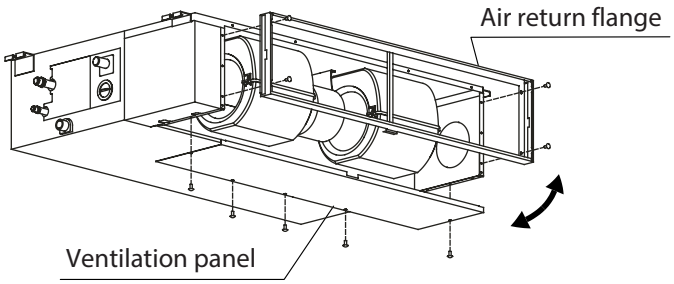

2. Change the mounting positions of ventilation panel and air return flange .

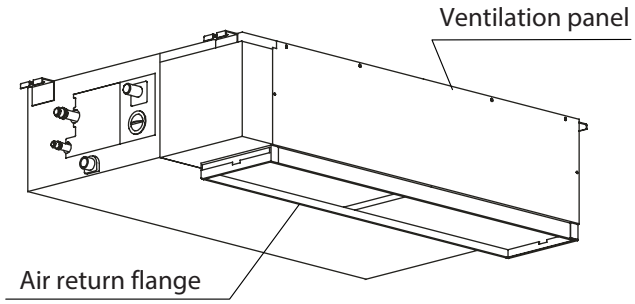

3. When installing the filter mesh, fit it into the flange as illustrated in the following figure.

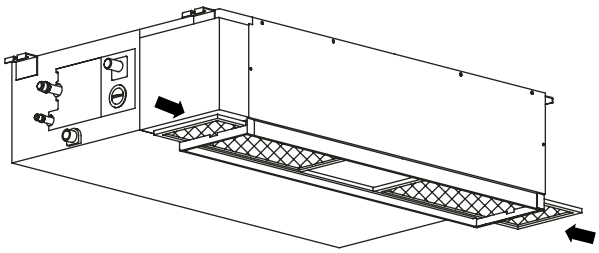

NOTE: All the figures in this manual are for demonstration purposes only. The air conditioner you have purchased may be slightly different in design, though similar in shape.

3.5 Fresh air duct installation

Dimension :

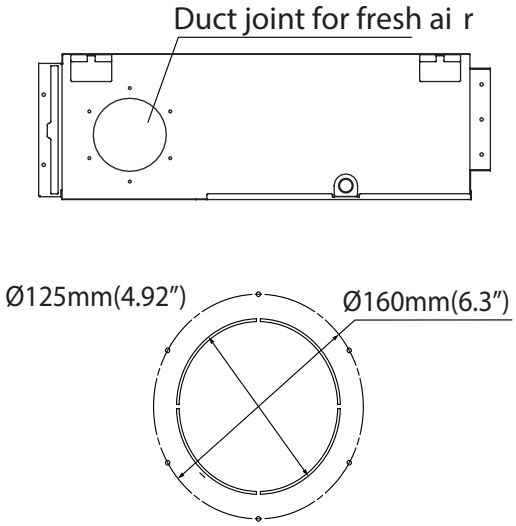

3. Indoor Unit Installation(Compact Cassette Type)

3.1 Service space for indoor unit

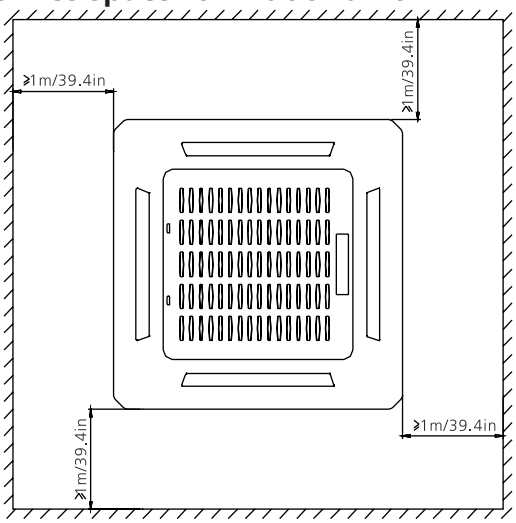

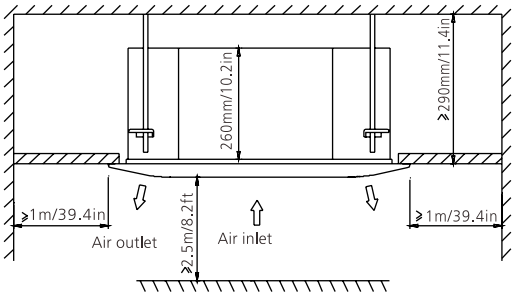

3.2 Hang Indoor Unit

1. Use the included paper template to cut a rectangular hole in the ceiling, leaving at least 1m (39.4”) on all sides. The cut hole size should be 4cm(1.6”) larger than the body size.

Be sure to mark the areas where ceiling hook holes will be drilled.

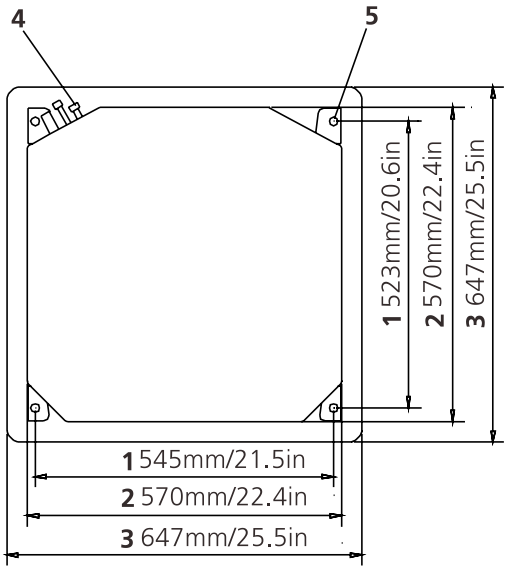

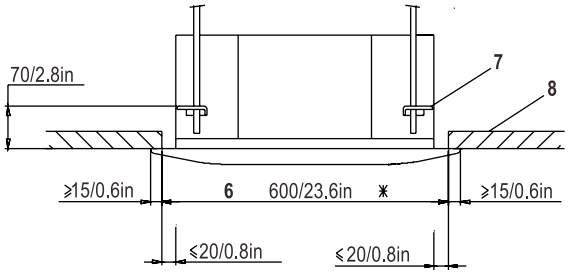

1 Suspension bolt pitch dimensions
2 Body dimensions
3 Decoration panel dimensions
4 Refrigerant piping
5 Suspension bolt (×4)
6 Ceiling opening dimensions
7 Hanger bracket
8 Ceiling board

2. Drill 4 holes 5cm (2”) deep at the ceiling hook positions in the internal ceiling. Be sure to hold the drill at a 90° angle to the ceiling.
3. Using a hammer, insert the ceiling hooks into the pre-drilled holes. Secure the bolt using the included washers and nuts.
4. Install the four suspension bolts

5. Mount the indoor unit. You will need two people to lift and secure it. Insert suspension bolts into the unit’s hanging holes. Fasten them using the included washers and nuts

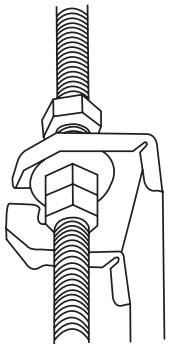

Adjust the position to ensure the gaps between the indoor

Installation

unit and the four sides of false ceiling are even. The bottom of the unit should be 24mm / 0.9in higher than ceiling board.

Generally, L should be half the length of the suspension bolt or long enough to prevent the nuts from coming off

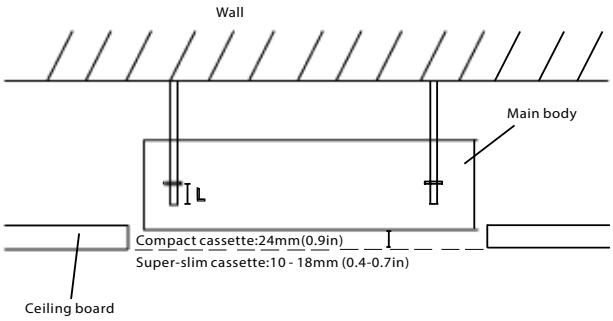

CAUTION:

Ensure that the unit is completely level.

The unit is equipped with a built-in drain pump and float switch. If the unit is tilted against the direction of condensate flows (the drainpipe side is raised), the float switch may malfunction and cause water to leak.

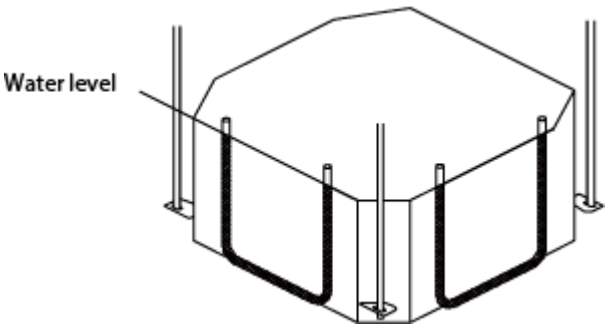

NOTE FOR NEW HOME INSTALLATION

When installing the unit in a new home, the ceiling hooks can be embedded in advance. Make sure that the hooks do not come loose due to concrete shrinkage. After installing the indoor unit, fasten the installation paper template onto the unit with bolts (M6X12) to determine in advance the dimension and position of the opening on the ceiling. Follow the instructions above for the remainder of the installation.

3.3 Compact Cassette Panel Installation

3.3.1 Remove the front grille

1. Slide the 2 grille hooks toward the middle of the decoration panel.

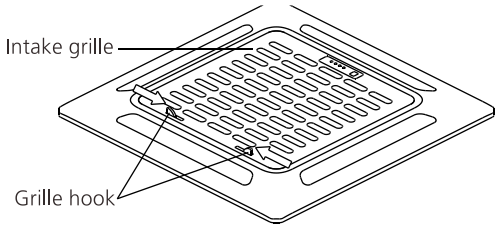

2. Hold the grille at a 45° angle, lift it up slightly and detach it from the main body.

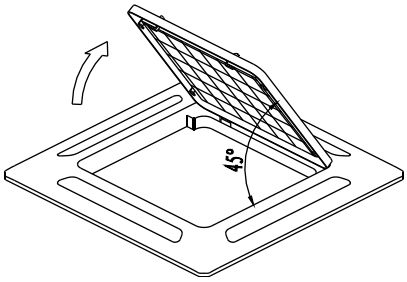

3.3.2 Install the panel

1. Align the indicate "△" on the decoration panel to the indicate "△" on the unit .

2. Attach the decoration panel to the unit with the supplied screws as shown in figure below.

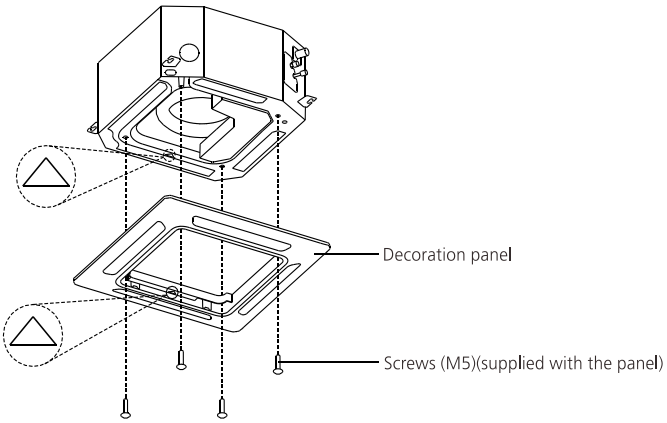

3. After installing the panel, ensure that there is no space between the unit body and decoration panel. Otherwise air may leak through the gap and cause dewdrop.

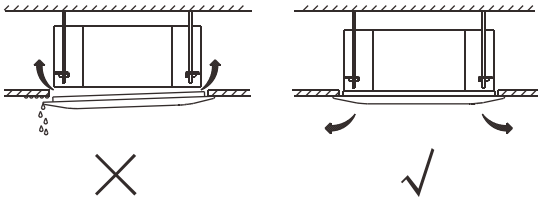

3.3.3 Mount the grille

Ensure that the buckles at the back of the grille be properly seated in the groove of the panel.

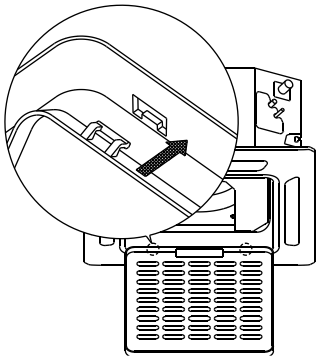

3.3.4 Connect the two wires of the panel to the main board of the unit.

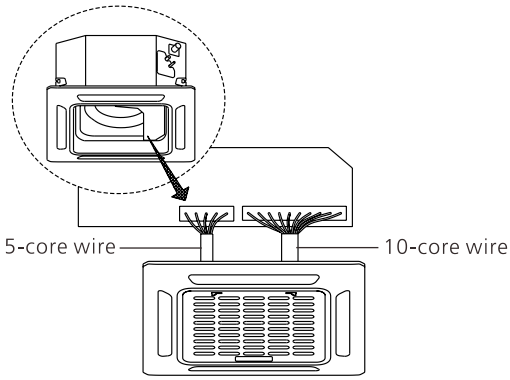

3.3.5 Fasten the control box lid with two screws .

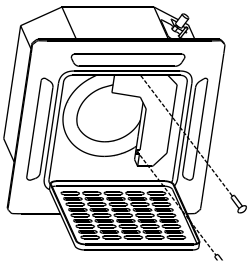

3.3.6 Close the front grille, and close the two grille hooks.

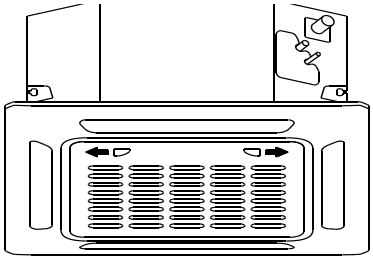

3. Indoor Unit Installation(New 4-way Cassette Type)

3.1 Service space for indoor unit

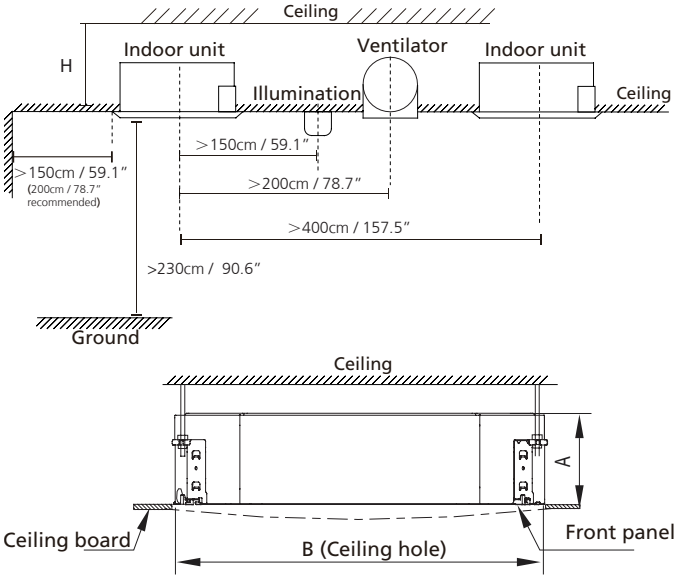

Capacity (kBtu/h)	A(mm/inch)	H(mm/inch)	B(mm/inch)
24	205/8.07	>230/9.06	900/35.4

3.2 Hang Indoor Unit

1. Use the included paper template to cut a rectangular hole in the ceiling, leaving at least 1m (39.4") on all sides. The cut hole size should be 4cm(1.6") larger than the body size.

Be sure to mark the areas where ceiling hook holes will be drilled.

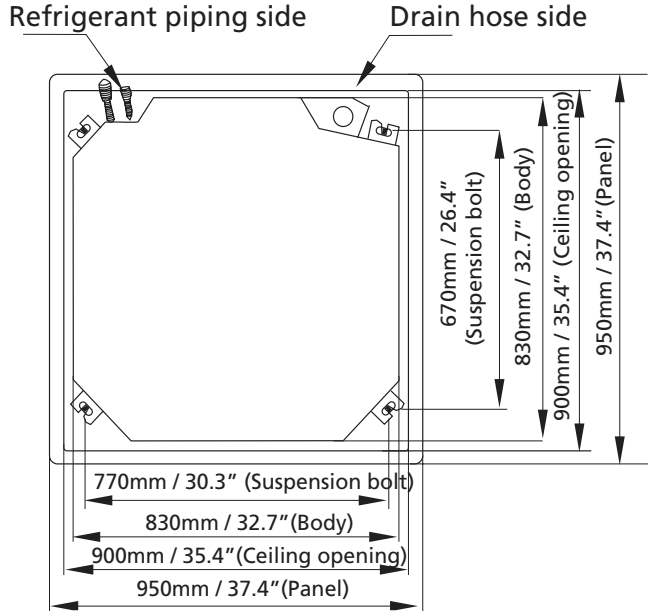

2. Drill 4 holes12-15.5cm (4.7"-6.1") deep at the ceiling hook positions in the internal ceiling. Be sure to hold the drill at a 90° angle to the ceiling.
3. Using a hammer, insert the ceiling hooks into the pre-drilled holes. Secure the bolt using the included washers and nuts.
4. Install the four suspension bolts

5. Mount the indoor unit. You will need two people to lift and secure it. Insert suspension bolts into the unit's hanging holes. Fasten them using the included washers and nuts

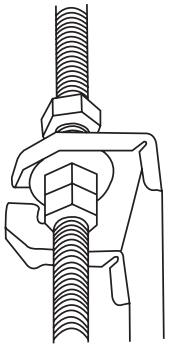

Adjust the position to ensure the gaps between the indoor unit and the four sides of false ceiling are even. The bottom of the unit should be 10-25mm(0.4-0.98") higher than ceiling board.

Generally, L should be half the length of the suspension bolt or long enough to prevent the nuts from coming off

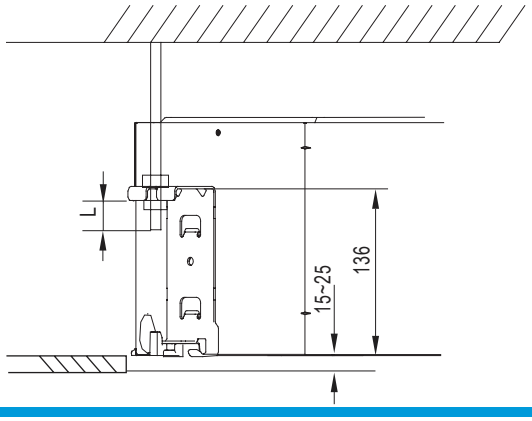

Installation

CAUTION:

Ensure that the unit is completely level.

The unit is equipped with a built-in drain pump and float switch. If the unit is tilted against the direction of condensate flows (the drainpipe side is raised), the float switch may malfunction and cause water to leak.

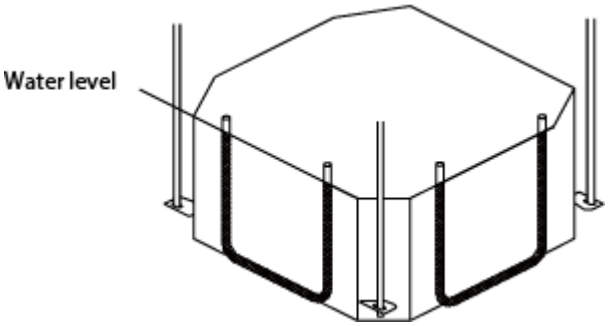

NOTE FOR NEW HOME INSTALLATION

When installing the unit in a new home, the ceiling hooks can be embedded in advance. Make sure that the hooks do not come loose due to concrete shrinkage. After installing the indoor unit, fasten the installation paper template onto the unit with bolts (M6X12) to determine in advance the dimension and position of the opening on the ceiling. Follow the instructions above for the remainder of the installation.

3.3 New 4-way Cassette Panel Installation

3.3.1 Remove the front grille

1.Push one side of the grille screw cover then remove the grid screw.

2. Push both of the tabs towards the middle simultaneously to unlock the hook on the grille.

3. Hold the grille at a 45° angle, lift it up slightly and detach it from the main body

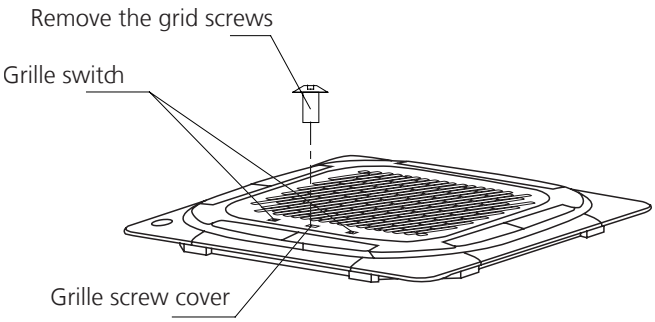

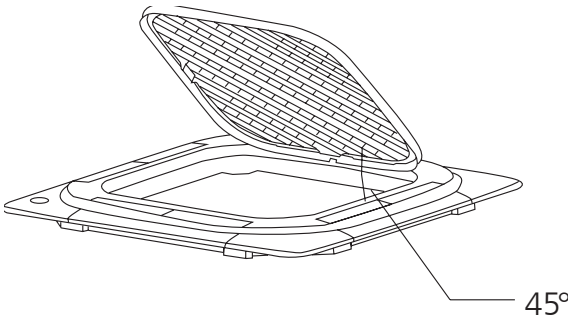

3.3.2 The panel hook is pre-hung to the indoor unit flow guide ring, as shown.

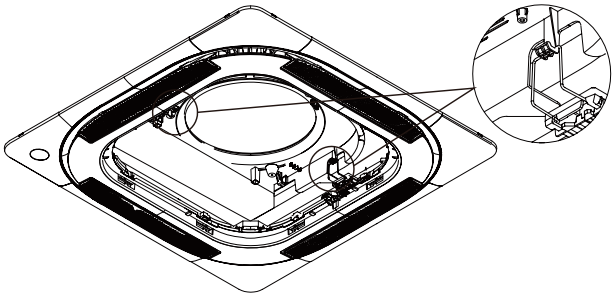

3.3.3 Install the panel with four screws(M5), as shown.

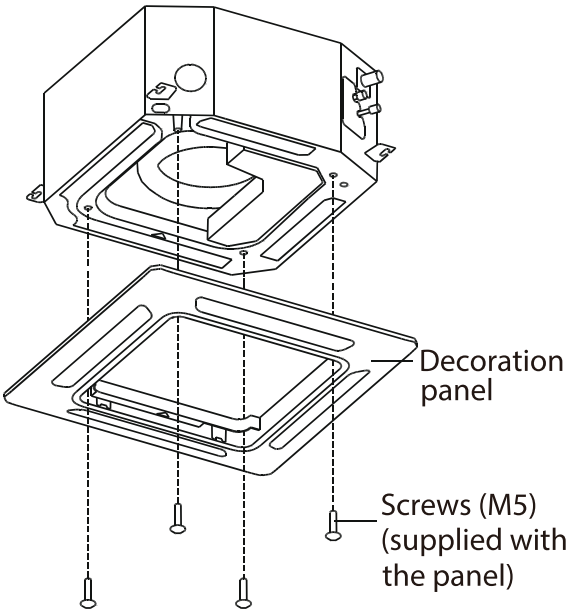

NOTE: Tighten the screws until the thicknessof the sponge between the main body and thepanel reduces to 4-6mm (0.2-0.3”).The edge ofthe panel should be in contact with

the ceilingwell.

1.Adjust the panel by turning it to the direction of arrow shown in figure below so that the ceiling opening is completely covered.

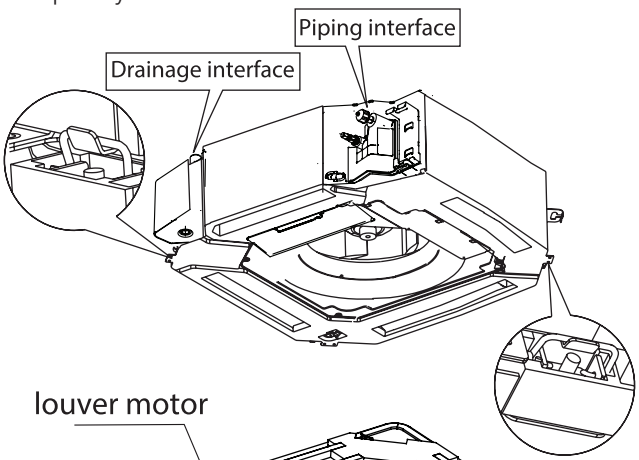

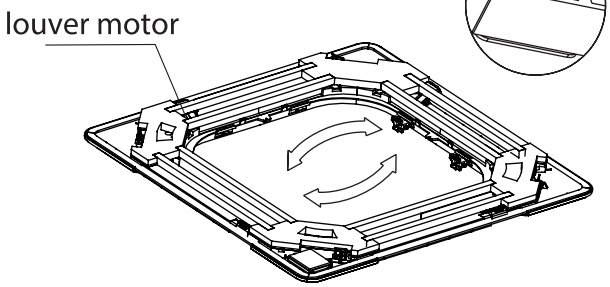

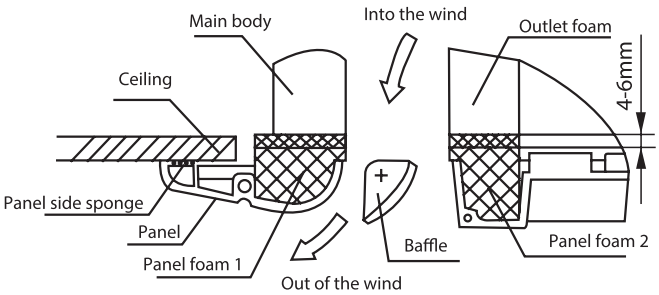

NOTE: If the height of the indoor unit needs to be adjusted, you can do so through the openings at the panel's four corners. Make sure that the internal wiring and drainpipe are not affected by this adjustment.

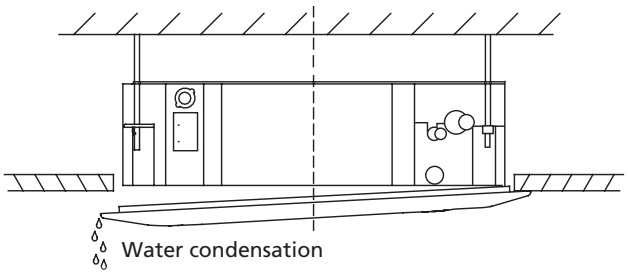

CAUTION:Failure to tighten screws can cause water leakage.

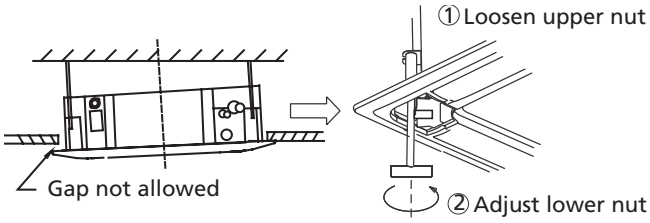

2. If the unit is not hung correctly and a gap exists, the unit's height must be adjusted to ensure proper function. The unit's height can be adjusted by loosening the upper nut, and adjusting the lower nut.

3. Hang the intake grille on the panel, and then connect the lead connectors of the louver motor and the control box on the panel to the corresponding connectors of the main body.

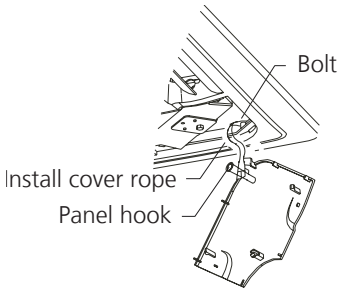

4. Re-installed into the style grid.

5. Reinstall the installation cover.

6. Fix the installation cover plate rope to the pillar of the installation cover plate, and gently press the installation cover plate into the panel.

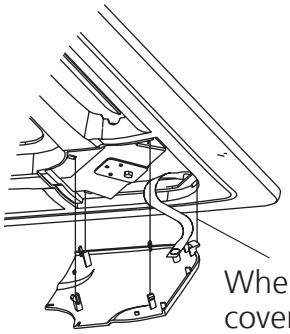

When installing the cover, slide the four slide fasteners into the corresponding slots on the panel.

NOTE: After installation, the butt plugs of display, swing, water pump and other wire bodies must be placed in the electric control box.

3.3.4 Connection diagram

For panels without vane control module, the display board CN1 is connected to the main control board CN10, the motor cable is connected to the main control board CN14.

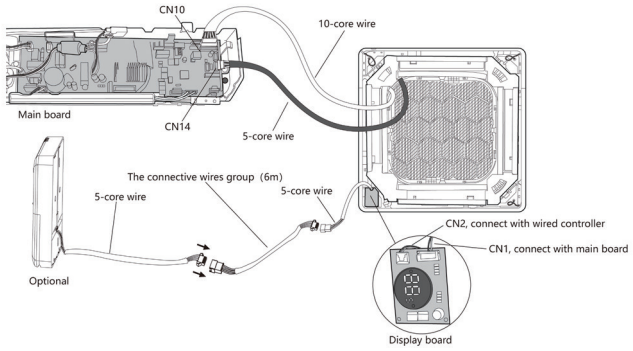

For panels with vane control module, the display board CN1 is connected to the main control board CN10, the vane control motor cable is connected to the main control board CN66.

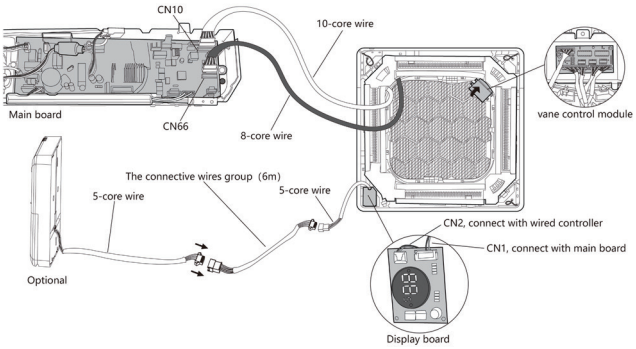

The display board CN2 is connected to a connecting cable. Then connect the other side of the connecting cable to the optional wired controller.

3. Indoor Unit Installation(New Compact Cassette Type)

3.1 Service space for indoor unit

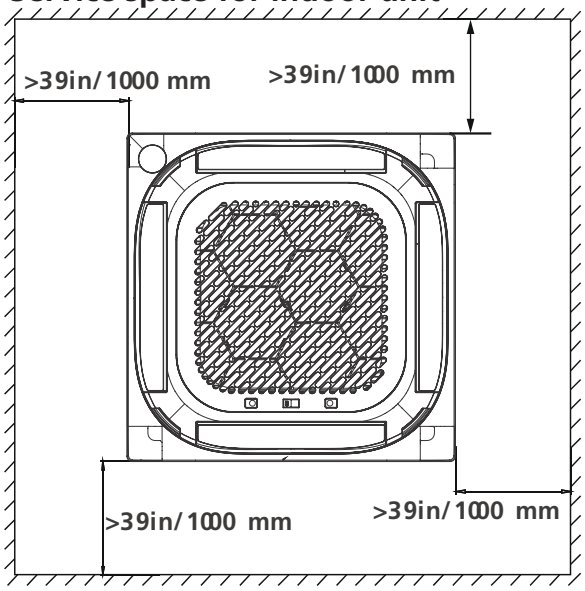

3.2 Hang Indoor Unit

1. Use the included paper template to cut a rectangular hole in the ceiling, leaving at least 1m (39") on all sides. The cut hole size should be 4cm(1.6") larger than the body size.

Be sure to mark the areas where ceiling hook holes will be drilled.

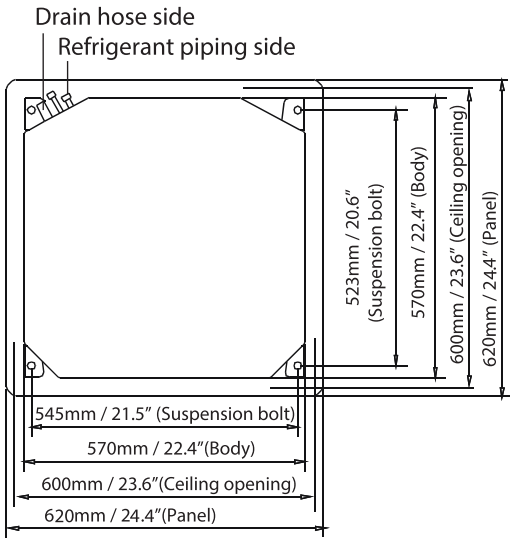

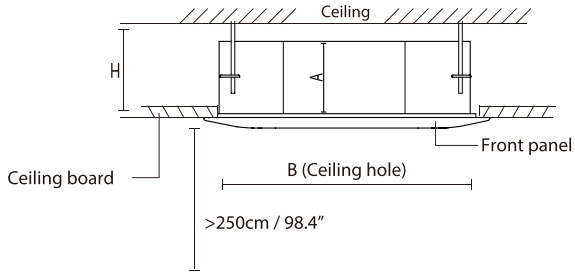

Installation

Length of A (mm/inch)	Length of H (mm/inch)	Length of B (mm/inch)
245/9.6	>290/11.4	600/23.6

2. Drill 4 holes 5cm (2") deep at the ceiling hook positions in the internal ceiling. Be sure to hold the drill at a 90° angle to the ceiling.
3. Using a hammer, insert the ceiling hooks into the pre-drilled holes. Secure the bolt using the included washers and nuts.
4. Install the four suspension bolts

5. Mount the indoor unit. You will need two people to lift and secure it. Insert suspension bolts into the unit's hanging holes. Fasten them using the included washers and nuts

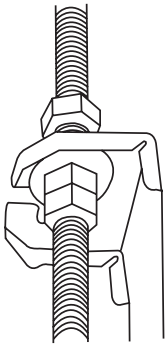

Adjust the position to ensure the gaps between the indoor unit and the four sides of false ceiling are even. The bottom of the unit should be 24mm / 0.9in higher than ceiling board. Generally, L should be half the length of the suspension bolt or long enough to prevent the nuts from coming off.

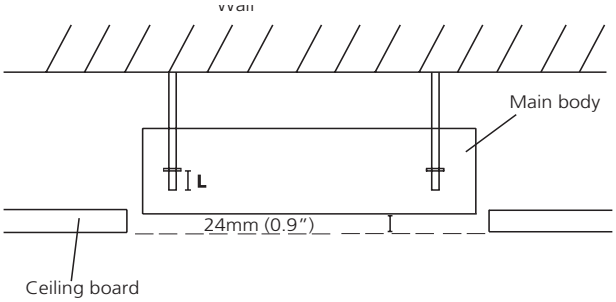

CAUTION:

Ensure that the unit is completely level.

The unit is equipped with a built-in drain pump and float switch. If the unit is tilted against the direction of condensate flows (the drainpipe side is raised), the float switch may malfunction and cause water to leak.

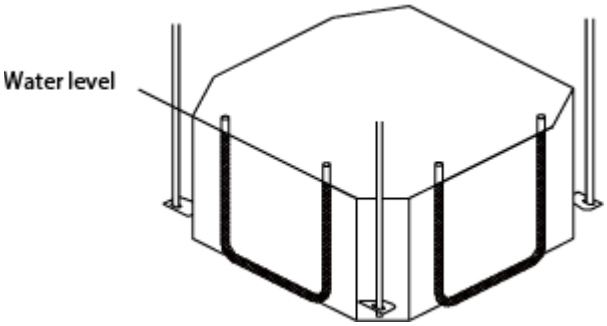

NOTE FOR NEW HOME INSTALLATION

When installing the unit in a new home, the ceiling hooks can be embedded in advance. Make sure that the hooks do not come loose due to concrete shrinkage. After installing the indoor unit, fasten the installation paper template onto the unit with bolts (M6X12) to determine in advance the dimension and position of the opening on the ceiling. Follow the instructions above for the remainder of the installation.

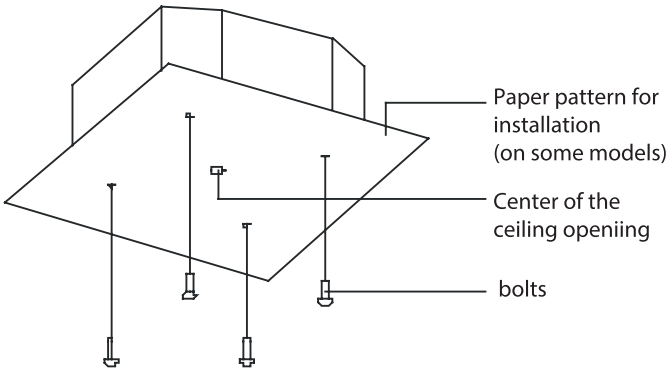

3.3 Compact Cassette Panel Installation

3.3.1 Remove the front grille

1.Push one side of the grille screw cover then remove the grid screw.

2. Push both of the tabs towards the middle simultaneously to unlock the hook on the grille.

3. Hold the grille at a 45° angle, lift it up slightly and detach it from the main body

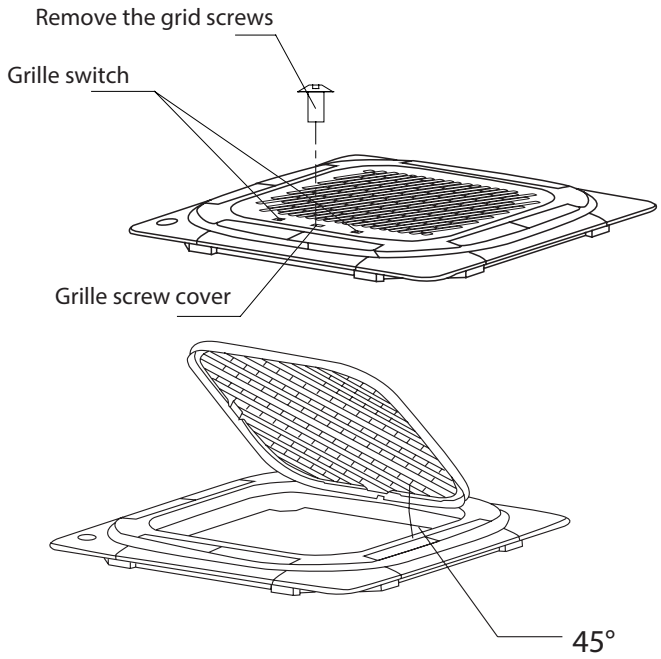

3.3.2 Remove the installation covers at the four corners by sliding them outwards.

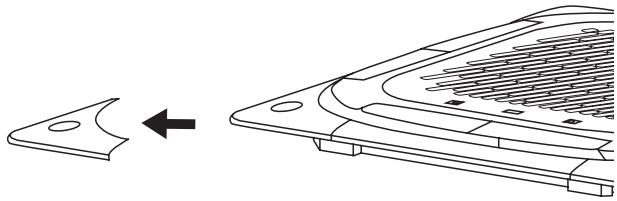

3.3.3 Install the panel

1. Align the front panel to the main body, taking into account the position of the piping and drain sides. Hang the four latches of the decorative panel to the hooks of the indoor unit. Tighten the panel hook screws evenly at the four corners.

Note: Tighten the screws until the thickness of the sponge between the main body and the panel reduces to 4-6mm (0.2-0.3”). The edge of the panel should be in contact with the ceiling well.

2. Adjust the panel by turning it to the direction of arrow shown in figure below so that the ceiling opening is completely covered.

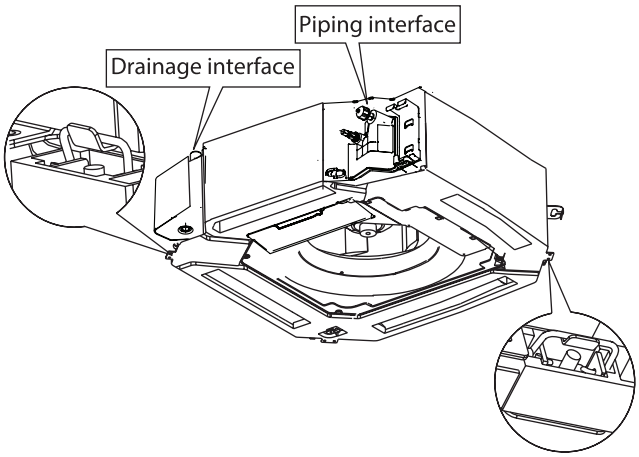

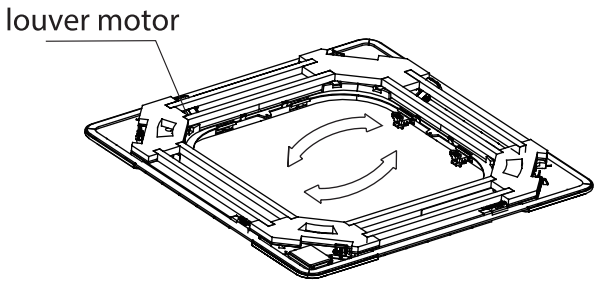

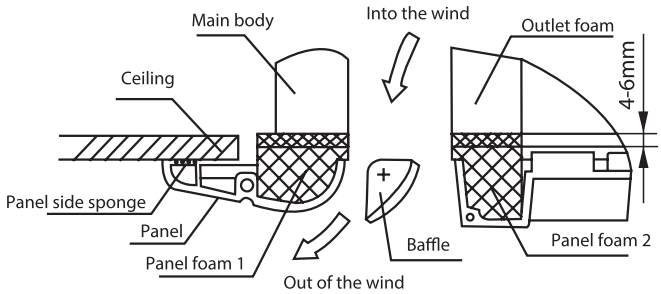

NOTE: If the height of the indoor unit needs to be adjusted, you can do so through the openings at the panel’s four corners. Make sure that the internal wiring and drainpipe are not affected by this adjustment.

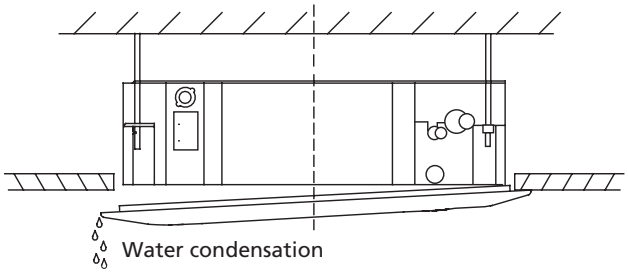

CAUTION:Failure to tighten screws can cause water leakage.

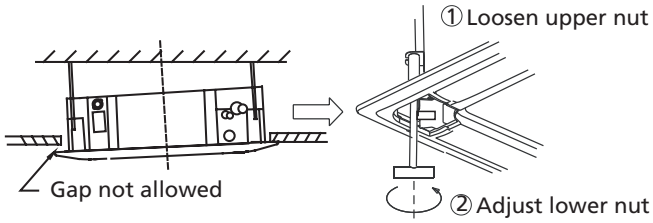

If the unit is not hung correctly and a gap exists, the unit's height must be adjusted to ensure proper function. The unit's height can be adjusted by loosening the upper nut, and adjusting the lower nut.

3. Hang the intake grille on the panel, and then connect the lead connectors of the louver motor and the control box on the panel to the corresponding connectors of the main body.

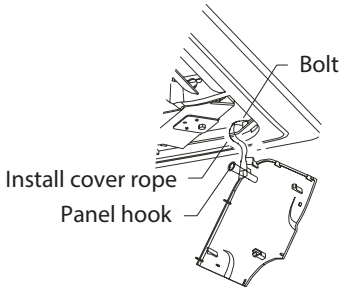

4. Re-installed into the style grid.

5.Reinstall the installation cover.

Fix the installation cover plate rope to the pillar of the installation cover plate, and gently press the installation cover plate into the panel.

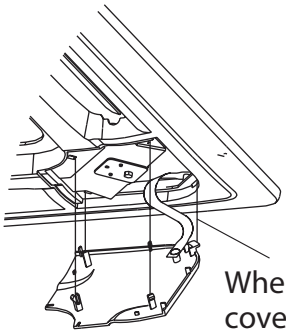

When installing the cover, slide the four slide fasteners into the corresponding slots on the panel.

NOTE: After installation, the butt plugs of display, swing, water pump and other wire bodies must be placed in the electric control box.

Connection diagram

For panels without vane control module, the display board CN1 is connected to the main control board CN10, the motor cable is connected to the main control board CN14.

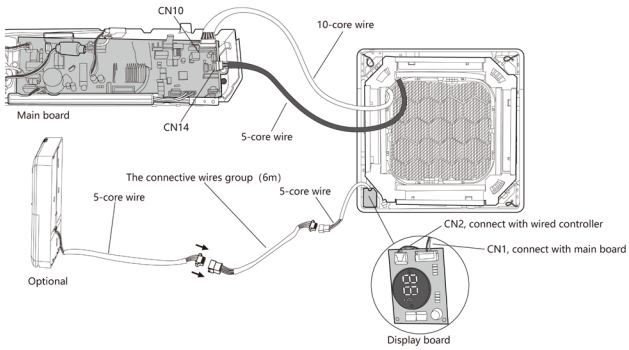

For panels with vane control module, the display board CN1 is connected to the main control board CN10, the vane control motor cable is connected to the main control board CN66.

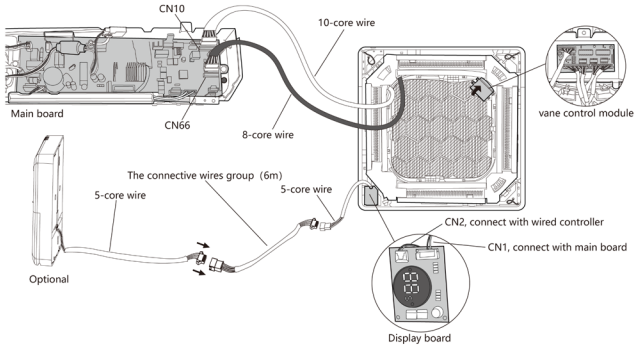

The display board CN2 is connected to a connecting cable. Then connect the other side of the connecting cable to the optional wired controller.

3. Indoor Unit Installation(Console)

3.1 Service space for indoor unit

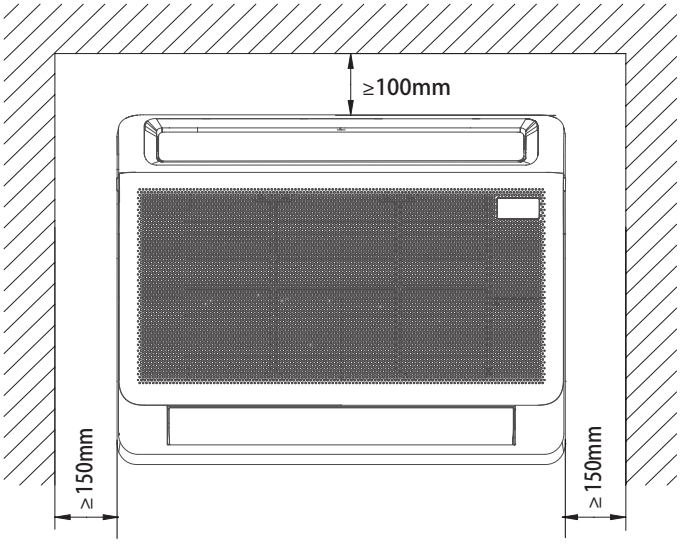

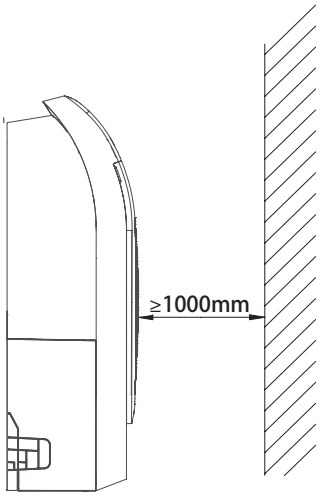

3.2 Installing the main body

1. After loosening the screws, remove the mounting plate from the unit.

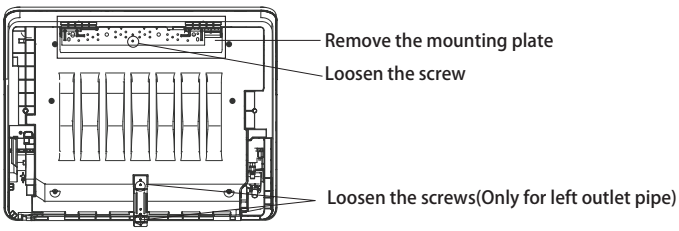

NOTE: If the pipe comes out on the left, it is necessary to loosen the screws on the bottom mounting plate. If the pipe comes out in other directions, it is not necessary.

2. Fix the mounting plate with a tapping screw onto the wall.

NOTE: It is recommended to fx it on the wall according to the hanging hole indicated by the arrow on the mounting plate. Mounting plate must be installed horizontally.

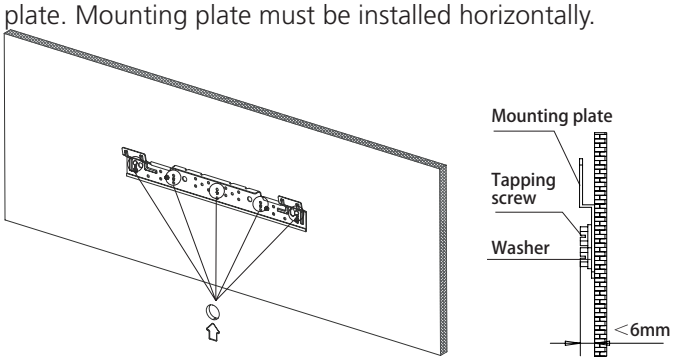

3. Hang the indoor unit on the mounting plate.
(The bottom of body can touch the floor or remain suspended, but the body must be installed vertically.)
NOTE: After installation, the unit shall be kept horizontal without tilting.

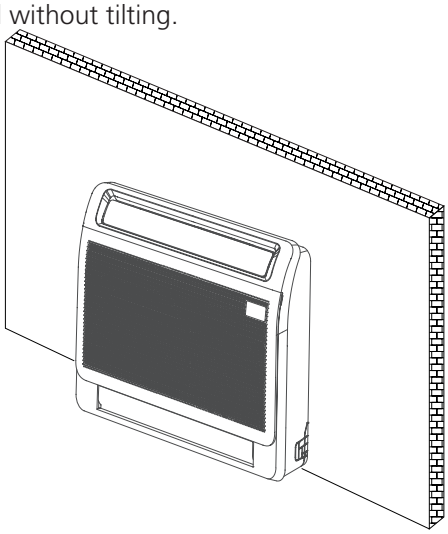

4.Bottom mounting plate installation

- Installation without skirting

The bottom mounting plate is fixed directly to the wall.

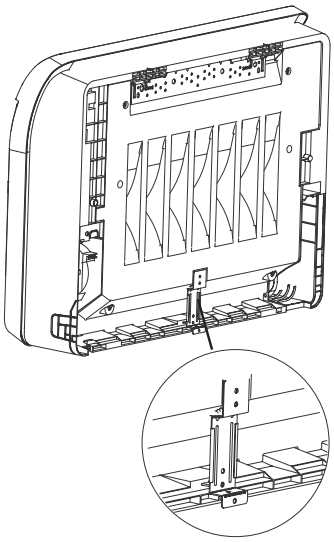

Installation

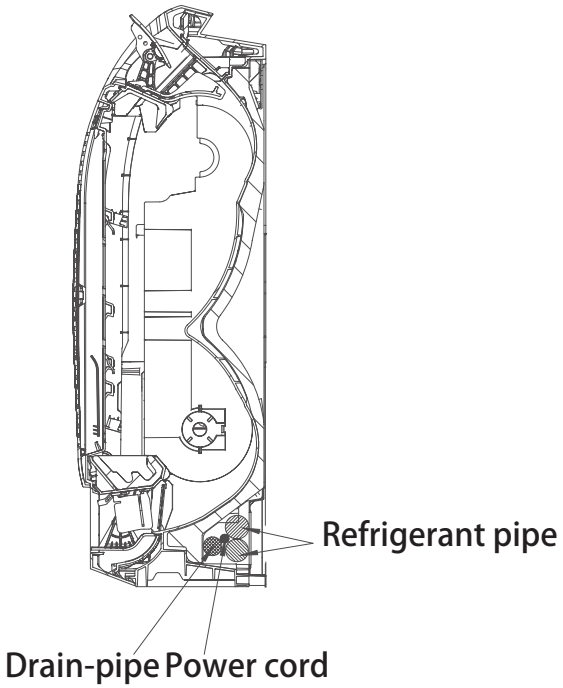

NOTE: In order to drain smoothly, the position of the drain pipe must refer to the above figure when discharging the right pipe.

- Installation with skirting line

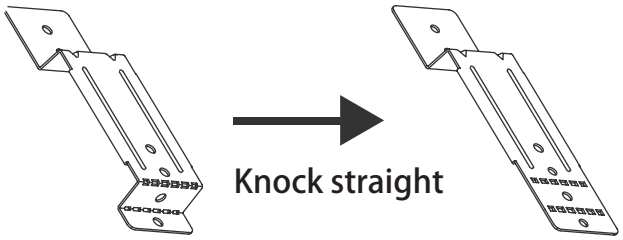

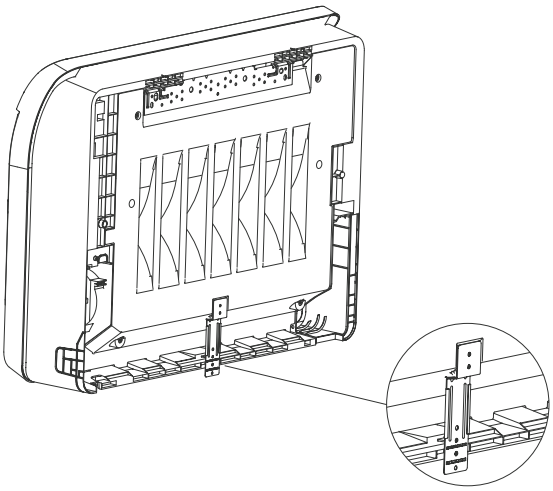

3.3 Taking the indoor unit apart to connect the pipe

1. Open the bottom piping cover plate

Press and hold the bottom two buckles, and then rotate to open the piping cover plate.

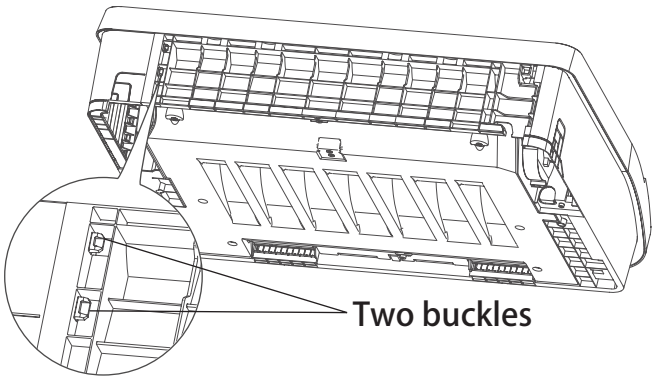

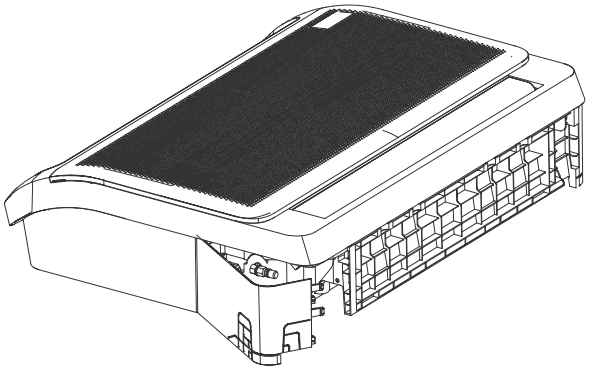

2. Remove the cover plate.

Remove the pipe cover plate and install the internal and external connecting pipes.

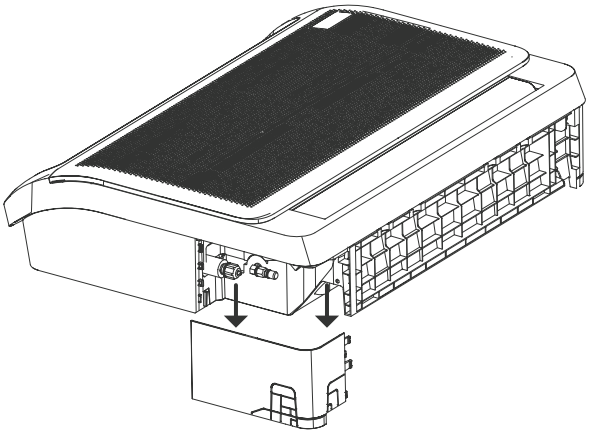

NOTE: Install small-size piping first, and then large-size piping.

NOTE: All the figures in this manual are for demonstration purposes only. The air conditioner you have purchased may be slightly different in design, though similar in shape.

3. Indoor Unit Installation(A7 Duct)

3.1 Installation place

The distance between the mounted indoor unit should meet the specifications illustrated in the following diagram.

1) Ceiling-mounted

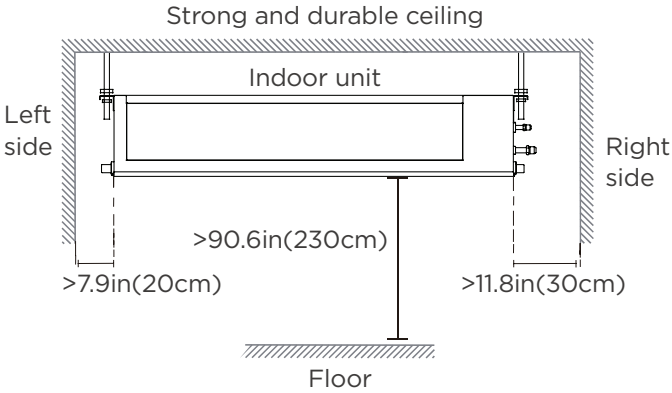

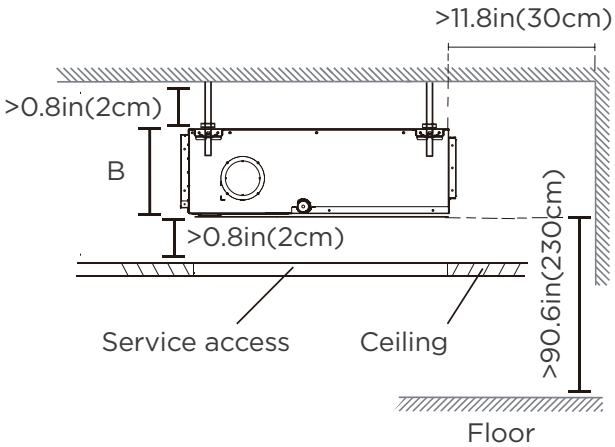

2) Wall-mounted(Standard for 18k~24k, optional for 7k~12k)

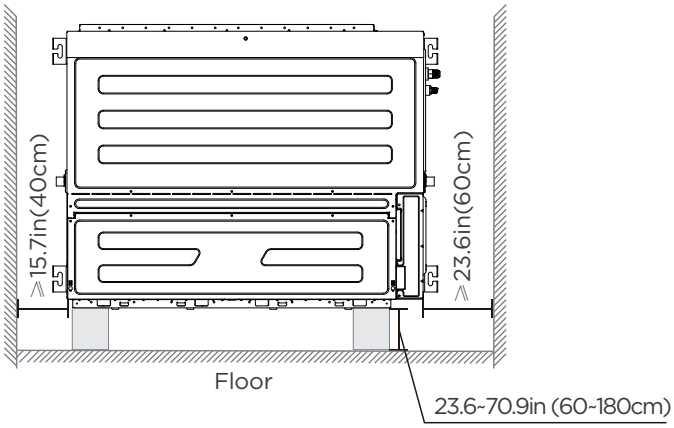

3.2 Service space for indoor unit

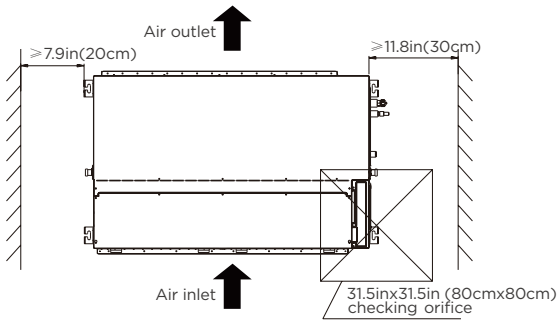

3.3 Hang Indoor Unit

1. Please refer to the following diagrams to locate the four positioning screw bolt holes on the ceiling. Be sure to mark the paces where you will drill ceiling hook holes.

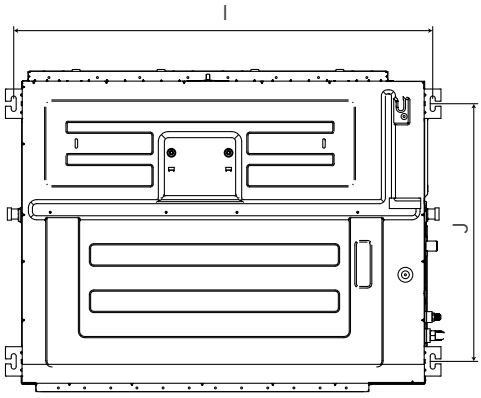

Capacity(KBtu/h)	Size of mounted lug((mm/inch))	
	I	J
7/9/12	741/29.2	360/14.2
18	740/29.1	640/25.2
24	1040/40.9	640/25.2

2. Install and fit pipes and wires after you have finished installing the main body. When choosing where to start, determine the direction of the pipes to be drawn out.

Especially in cases where there is a ceiling involved, align the refrigerant pipes, drain pipes, and indoor and outdoor lines with their connection points before mounting the unit..

3. Install hanging screw bolts.

1) Cut off the roof beam.

2) Strengthen the point at which the cut was made. Consolidate the roof beam..

4. After you select an installation location,align the refrigerant pipes, drain pipes, as well as indoor and outdoor wires with their connection points before mounting the unit..

5. Drill 4 holes 10cm (4") deep at the ceiling hook positions in the internal ceiling. Be sure to hold the drill at a 90° angle to the ceiling.

6. Secure the bolt using the included washers and nuts.

7. Install the four suspension bolts.

8. Mount the indoor unit with at least two people to lift and secure it. Insert suspension bolts into the unit's hanging holes. Fasten them using the washers and nuts provided.

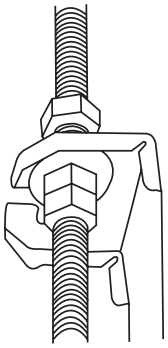

9. Mount the indoor unit onto the hanging screw bolts with a block. Position the indoor unit flat using a level indicator to prevent leaks.

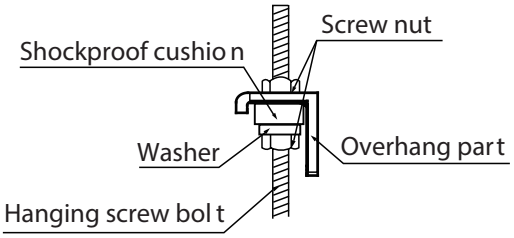

Note: Confirm the minimum drain tilt is 1/100 or more.

3.4 Duct installation

1. Install the filter(optional) according to the size of the air inlet.

2. Install the canvas tie-in between the body and duct.

3. The air inlet and air outlet duct should be far enough apart enough to a avoid air passage short-circuit.

4. Connect the duct according to the following diagram.

Ceiling-mounted

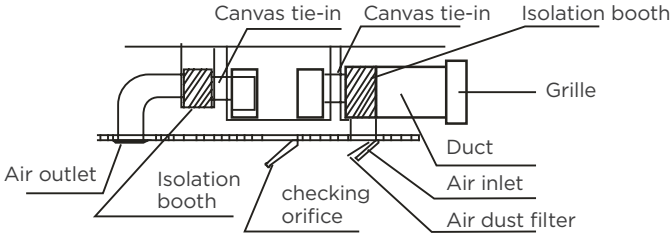

Wall-mounted(Standard for 18k~24k, optional for 7k~12k)

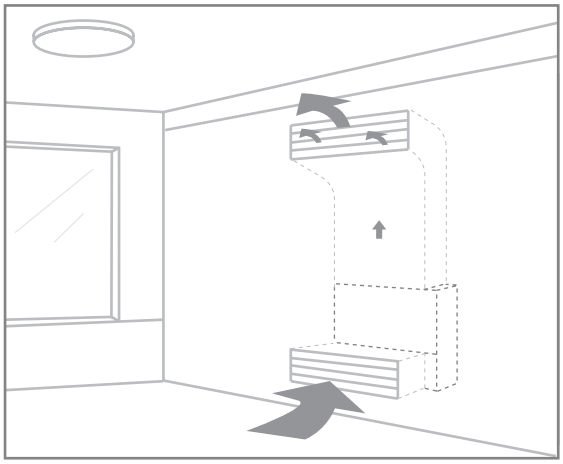

NOTE:

1. The min. length of the duct should be more than 1m, and fix on the air inlet by screws (applicable to the unit that the air inlet filter is not fasten by screws).

2. The inlet of the air duct needs to be installed with a grille, which needs to be fixed to the air duct with screws.

3. Do not place the connecting duct weight on the indoor unit.

4. When connecting the duct, use an nonflammable canvas tie-in to prevent vibrating.

5. Insulation foam must be wrapped outside the duct to avoid condensate. An internal duct underlayer can be added to reduce noise, if the end-user requires.

6. When the machine is wall-mounted, the machine should be concealed mounting, and the air inlet and outlet should be grille, and the grille should be fixed firmly with screws.

3.5 Ceiling-mounted Installation(With external pump)(only for 7k~12k)

Cut both ends of the rubber hose into a straight one, use it to connect the drain Connector A and the external pump and safety it with clamps on both ends. Then connect the drainpipe to the Connector B.

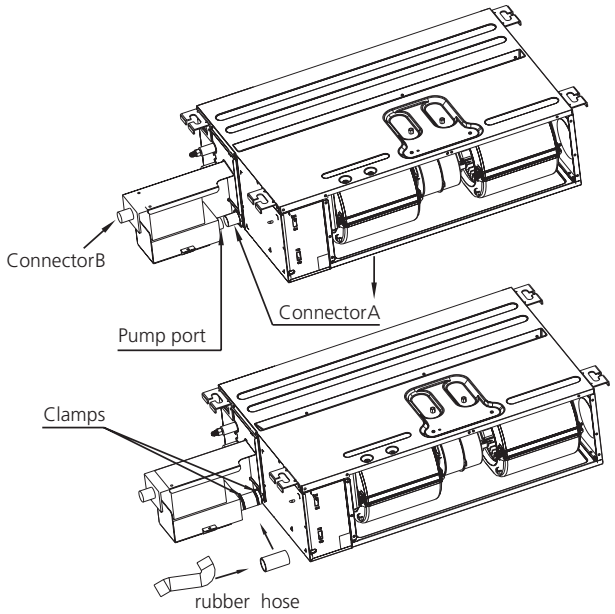

3.6 Wall mounted installation(Standard for 18k~24k, optional for 7k~12k)

For 7k~12k

3.6.1 No need pump (Disable pump)

The pump must be disabled while the unit is installed vertically or the pump assembly is removed from its original position.

Open the cover of E-Parts Box assembly, unplug the "PUMP" pin to disable the pump function, and short connect "CN5" plug to disable the water level sensor.

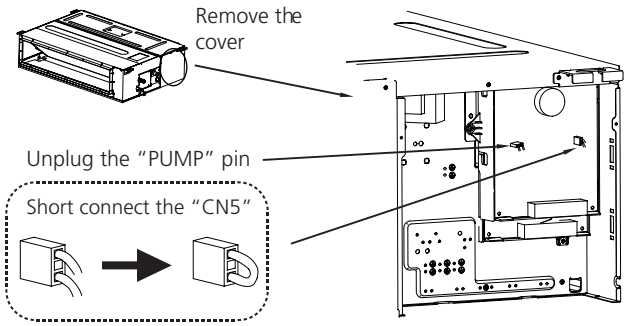

3.6.2 Drain pipe connecting

When installed vertically (up flow), the pump must be disabled firstly. Follow the 3.9.1 steps to disable the pump. For the unit with external pump (9k&12k models), the whole pump assembly can be removed. Then take the cap on drain connector off and connect the drainpipe to drain connector.

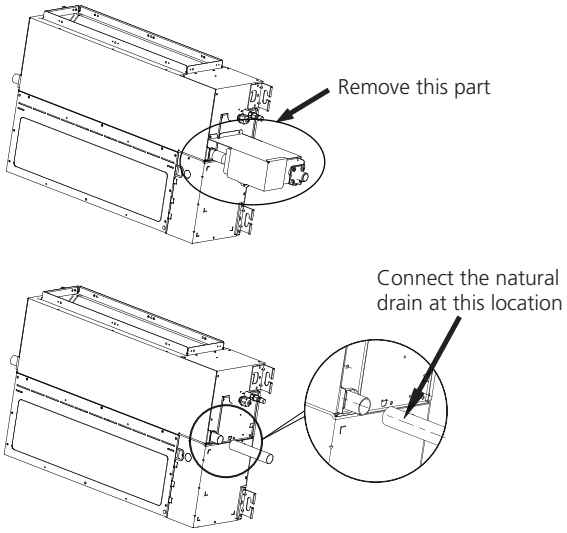

For 18k~24k

The unit supports wall mounted, if the unit is purchased with a pump and requires vertical mounting, please follow the steps below:

1. Remove the electrical control box cover, unplug the pump and water level switch terminals from the main control board.

2. Disassemble the pump components.

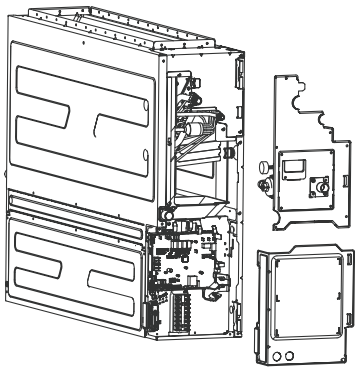

3. Remove the 4 screws, rotate the water pump components by 90° and fix them to the water pump mounting plate again.

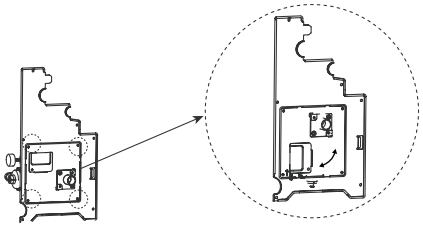

4. Install the pump parts to the machine and connect the wiring set.

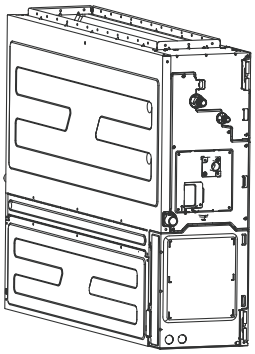

3.7 Filter installation

1. Take off ventilation panel and flange.

For 7k~12k

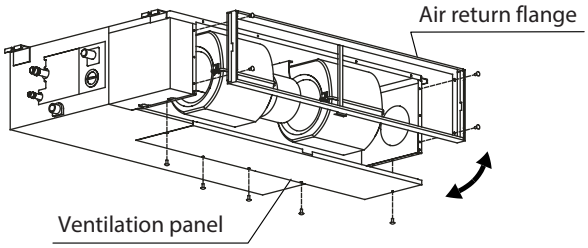

Bend the rear ventilation panel 90 degrees along the dotted line into a descending ventilation panel.(some models)

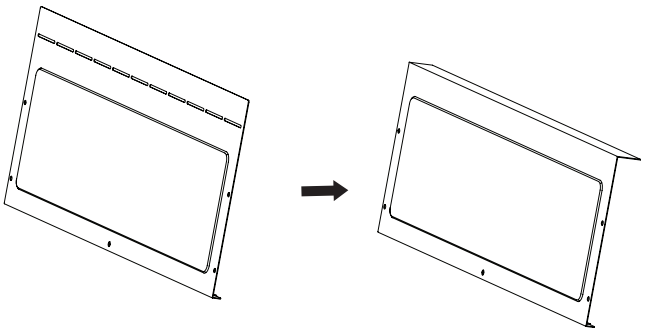

For 18k~24k

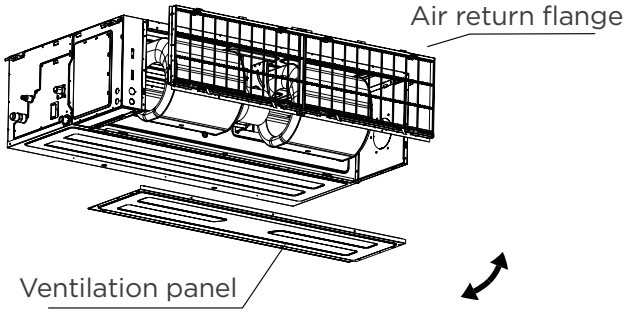

2. Change the mounting positions of the ventilation panel and air return flange.

3. When installing the filter mesh, fit it into the flange as illustrated in the following figure.

For 7k~12k

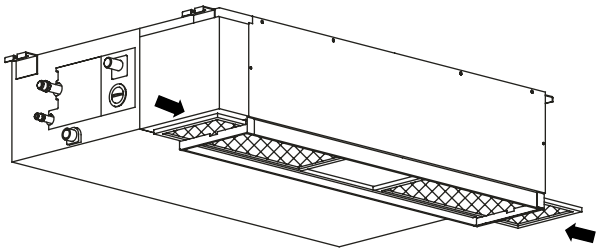

or

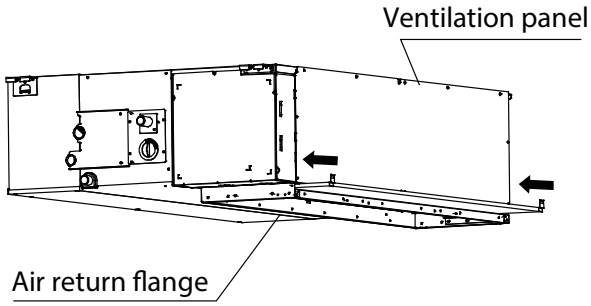

For 18k~24k

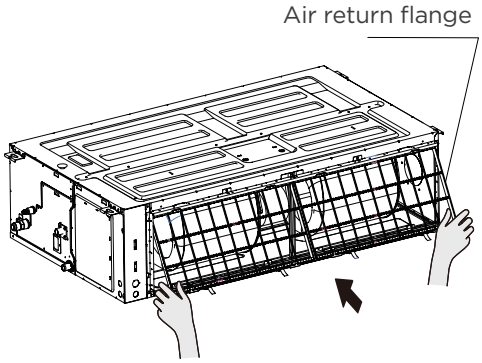

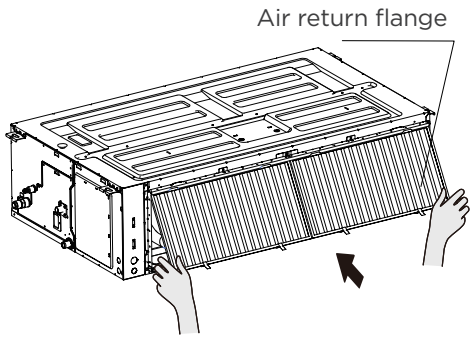

or

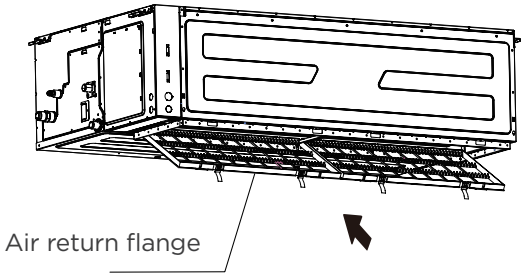

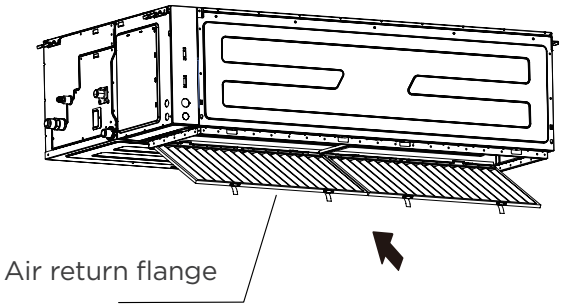

3.8 Fresh air duct installation

Dimension :

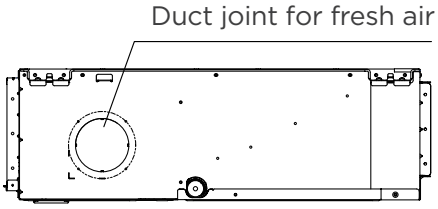

7k~12k:

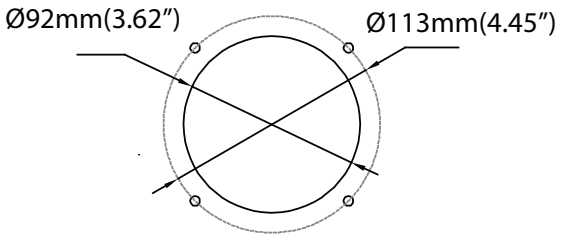

18k~24k:

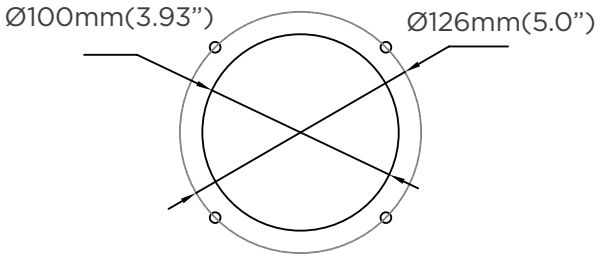

3. Indoor Unit Installation(wall mounted Type)

3.1 Service space for indoor unit

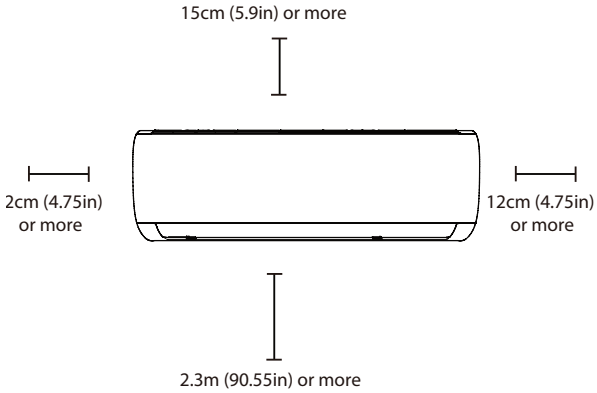

3.2 Attach mounting plate to wall

- **The mounting plate is the device on which you will mount the indoor unit.**

1. Remove the screw that attaches the mounting plate to the back of the indoor unit.

2. Place the mounting plate against the wall in a location that meets the standards in the Select Installation Location step. (See Mounting Plate Dimensions for detailed information on mounting plate sizes.)

3. Drill holes for mounting screws in places that:

- have studs and can support the weight of the unit.
- correspond to screw holes in the mounting plate.

4. Secure the mounting plate to the wall with the screws provided.

5. Make sure that mounting plate is flat against the wall.

- **Mounting plate dimensions**

Different models have different mounting plates. In order to ensure that you have ample room to mount the indoor unit, the diagrams to the right show different Types of mounting plates along with the following dimensions:

1. Width of mounting plate

2. Height of mounting plate

3. Width of indoor unit relative to plate

4. Height of indoor unit relative to plate

5. Recommended position of wall hole (both to the left and right of mounting plate)

6. Relative distances between screw holes

Correct orientation of Mounting Plate

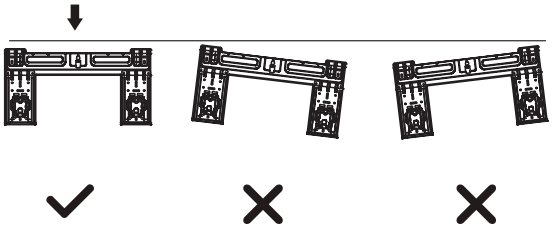

For Forest series:

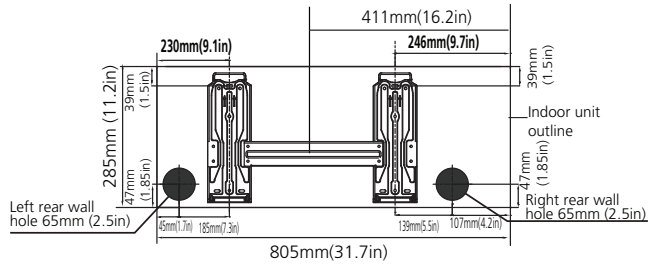

7K/9K/12K Models

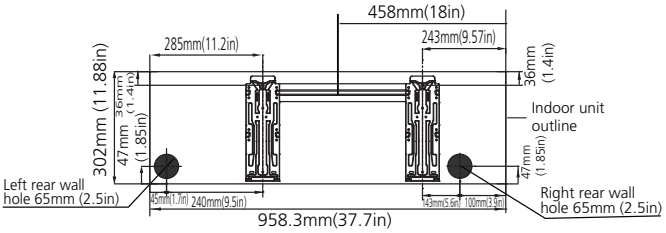

18K Model

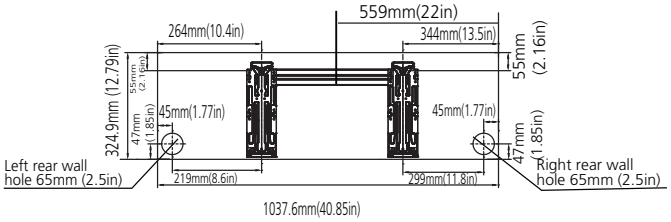

24K Model

For Aurora series:

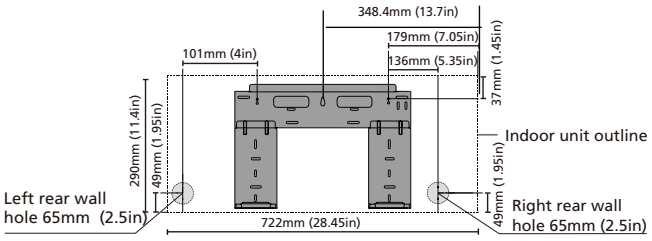

9K Model

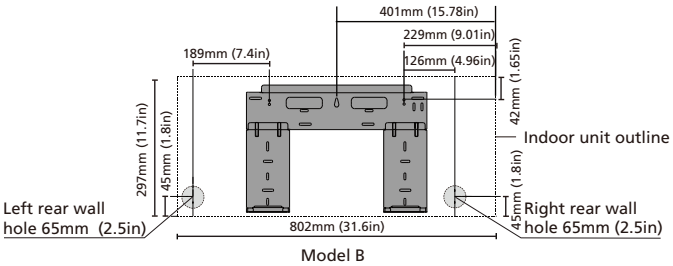

12K Model

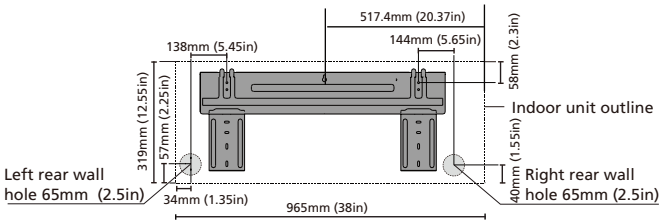

18K Model

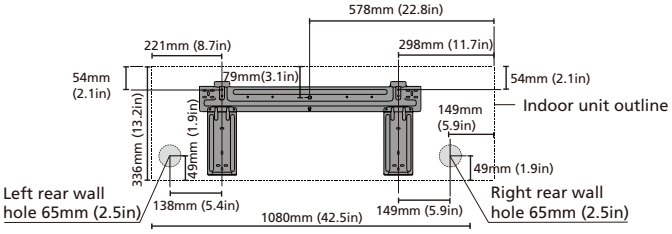

24K Model

For All Easy series:

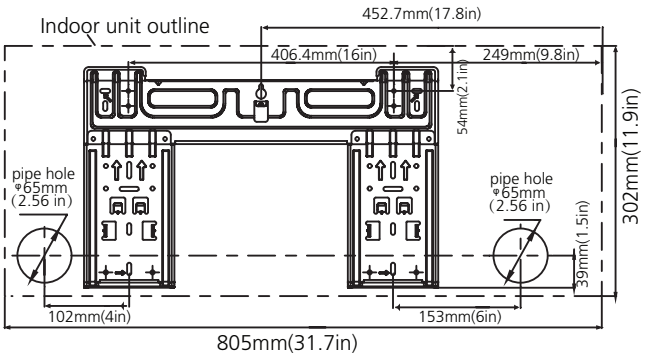

9K/12K Model

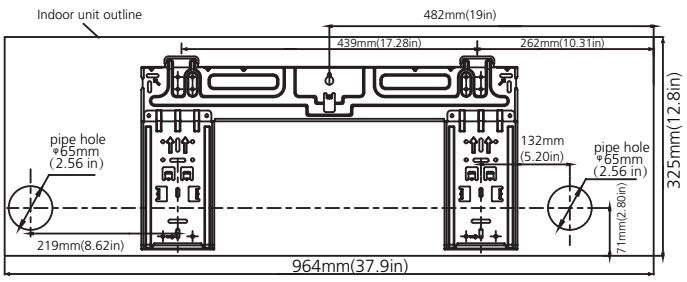

18K Model

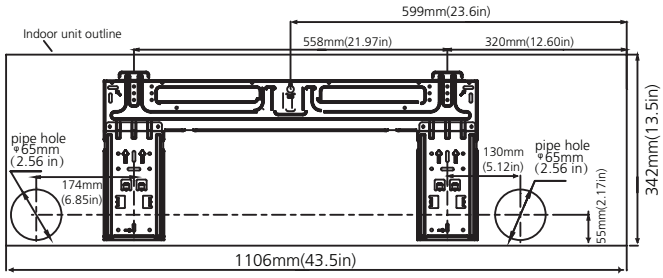

24K Model

For XTREME series:

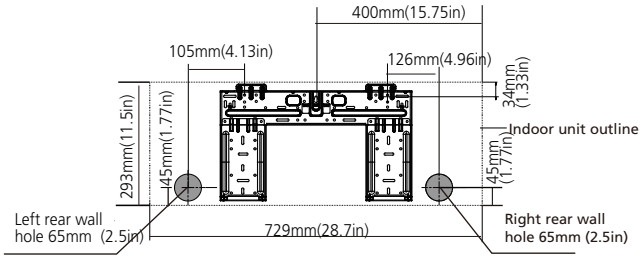

MSAGAU-09

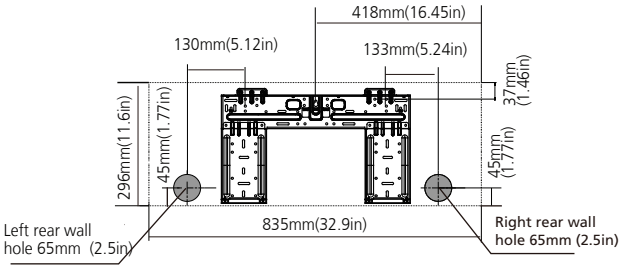

MSAGBU-09&MSAGBU-12

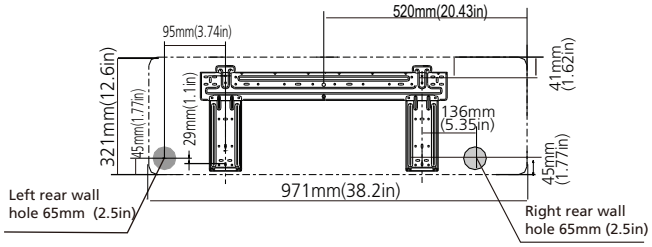

18K Model

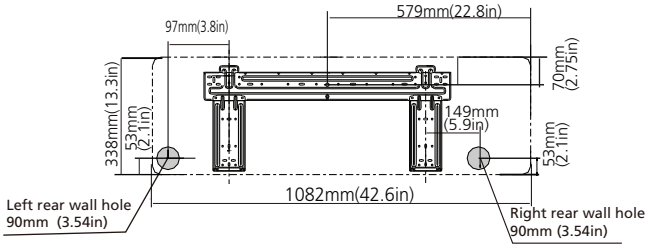

24K Model

For BREEZELESS series:

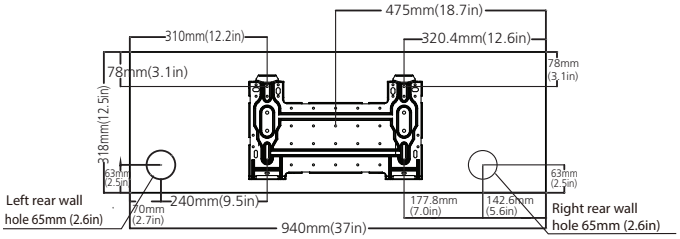

9K/12K Model

For Glory Pro series:

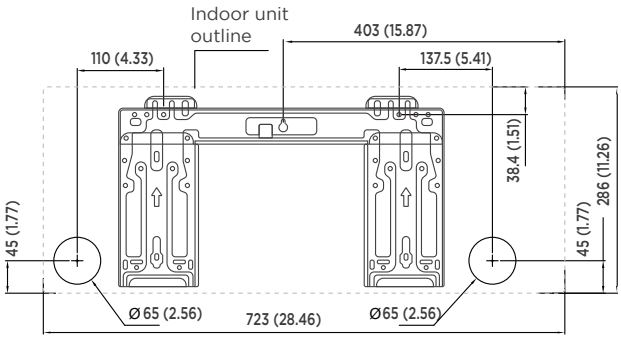

7k/9K Model

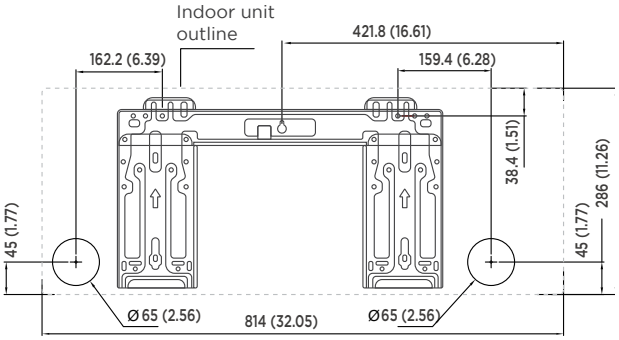

12K Model

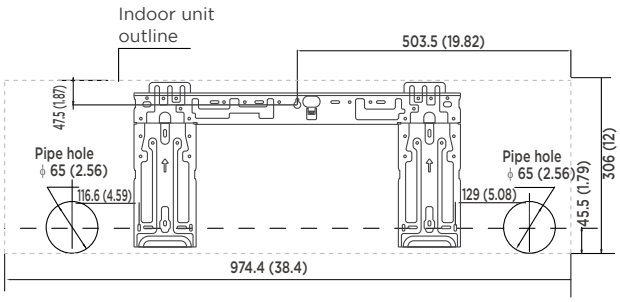

Installation

For BREEZELESS E series:

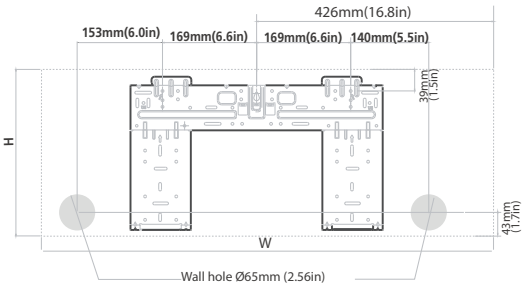

Indoor unit dimensions (W x H):
812mm (40.0in) x 299mm (11.8in)

9k/12k Model

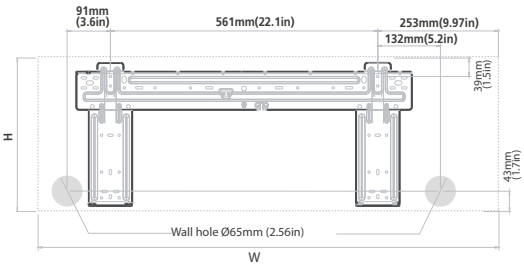

Indoor unit dimensions (W x H):
968mm (38.1in) x 322mm (12.7in)

18k Model

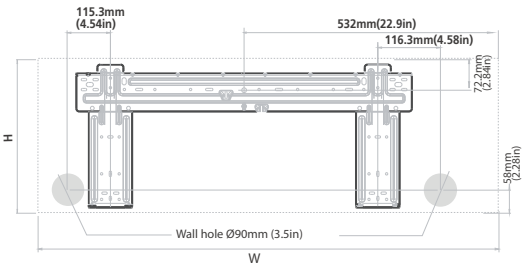

Indoor unit dimensions (W x H):
1030mm (40.55in) x 338mm (13.3in)

24k Model

18K Model

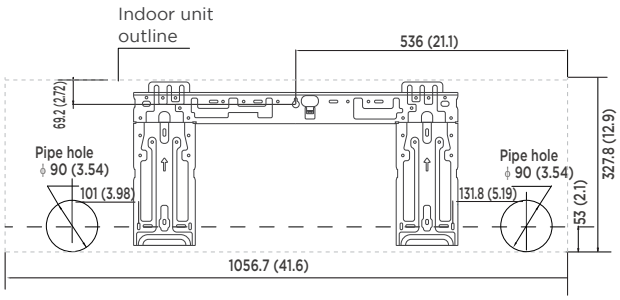

24K Model

- **Note for concrete or brick walls:**

If the wall is made of brick, concrete, or similar material, drill 5mm-diameter (0.2in-diameter) holes in the wall and insert the sleeve anchors provided. Then secure the mounting plate to the wall by tightening the screws directly into the clip anchors.

3.3 Drill wall hole for connective piping

You must drill a hole in the wall for refrigerant piping, the drainage pipe, and the signal cable that will connect the indoor and outdoor units.

1. Determine the location of the wall hole based on the position of the mounting plate. Refer to Mounting Plate Dimensions on the next page to help you determine the optimal position. The wall hole should have a 65mm (2.5in) diameter at least, and at a slightly lower angle to facilitate drainage.

2. Using a 65mm (2.5in) or 90mm(3.54in) (depending on models)core drill, drill a hole in the wall. Make sure that the hole is drilled at a slight downward angle, so that the outdoor end of the hole is lower than the indoor end by about 5mm to 7mm (0.2-0.27in). This will ensure proper water drainage.

3. Place the protective wall cuff in the hole. This protects the edges of the hole and will help seal it when you finish the installation process.

NOTE: When drilling the wall hole, make sure to avoid wires, plumbing, and other sensitive components.

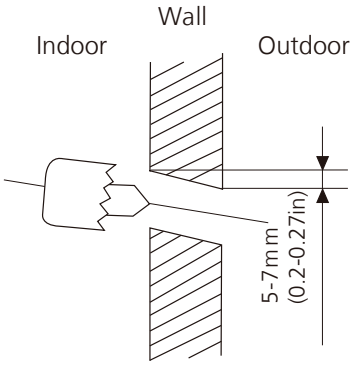

3.4 Prepare refrigerant piping

The refrigerant piping is inside an insulating sleeve attached to the back of the unit. You must prepare the piping before passing it through the hole in the wall. Refer to the Refrigerant Piping Connection section of this manual for detailed instructions on pipe flaring and flare torque requirements, technique, etc.

1. Based on the position of the wall hole relative to the mounting plate, choose the side from which the piping will exit the unit.

2. If the wall hole is behind the unit, keep the knock-out panel in place. If the wall hole is to the side of the indoor unit, remove the plastic knock-out panel from that side of the unit. This will create a slot through which your piping can exit the unit. Use needle nose pliers if the plastic panel is too difficult to remove by hand.

3. Groove has been made in the knock-out panel in order

to cut it conveniently. The size of the slot is determined by the diameter of piping.

4. Use scissors to cut down the length of the insulating sleeve to reveal about 15cm (6in) of the refrigerant piping. This serves two purposes:

- To facilitate the Refrigerant Piping Connection process.
- To facilitate Gas Leak Checks and enable you to check for dents.

5. If existing connective piping is already embedded in the wall, proceed directly to the Connect Drain Hose step. If there is no embedded piping, connect the indoor unit's refrigerant piping to the connective piping that will join the indoor and outdoor units. Refer to the Refrigerant Piping Connection section of this manual for detailed instructions.

6. Based on the position of the wall hole relative to the mounting plate, determine the necessary angle of your piping.

7. Grip the refrigerant piping at the base of the bend.

8. Slowly, with even pressure, bend the piping towards the hole. Do not dent or damage the piping during the process.

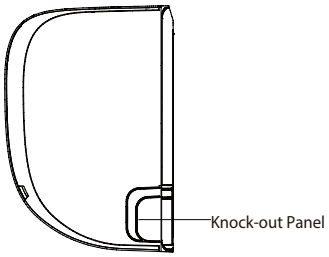

NOTE: Refrigerant piping can exit the indoor unit from four different angles:

- Left-hand side
- Left rear
- Right-hand side
- Right rear

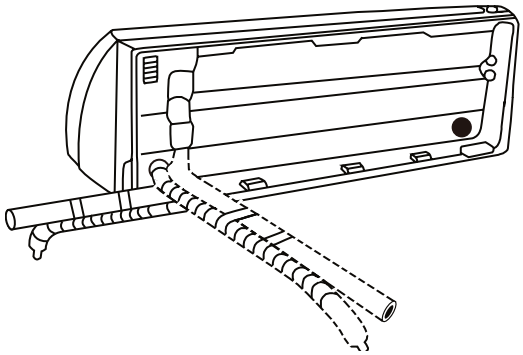

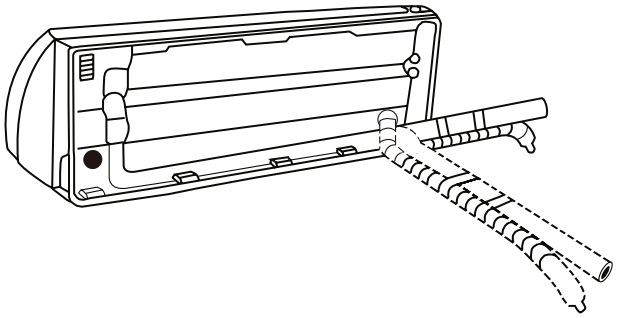

Be extremely careful not to dent or damage the piping while bending them away from the unit. Any dents in the piping will affect the unit's performance.

3.5 Connect drain hose

By default, the drain hose is attached to the left hand side of unit (when you're facing the back of the unit). However, it can also be attached to the right-hand side.

1. To ensure proper drainage, attach the drain hose on the same side that your refrigerant piping exits the unit.

2. Attach drain hose extension (purchased separately) to the end of drain hose.

3. Wrap the connection point firmly with Teflon tape to ensure a good seal and to prevent leaks.

4. For the portion of the drain hose that will remain indoors, wrap it with foam pipe insulation to prevent condensation.

5. Remove the air filter and pour a small amount of water into the drain pan to make sure that water flows from the unit smoothly.

NOTE ON DRAIN HOSE PLACEMENT:

- DO NOT kink the drain hose.
- DO NOT create a water trap.
- DO NOT put the end of drain hose in water or a container that will collect water.

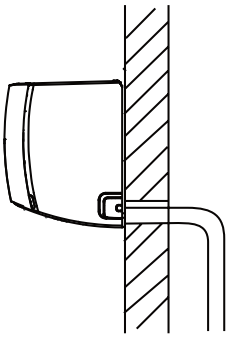

Make sure there are no kinks or dent in drain hose to ensure proper drainage.

3.6 Connect signal cable

3.6.1 Before performing electrical work, read these regulations

1. All wiring must comply with local and national electrical codes, and must be installed by a licensed electrician.

2. All electrical connections must be made according to the Electrical Connection Diagram located on the panels of the indoor and outdoor units.

3. If there is a serious safety issue with the power supply, stop work immediately. Explain your reasoning to the client, and refuse to install the unit until the safety issue is properly resolved.

4. Power voltage should be within 90-110% of rated voltage. Insufficient power supply can cause malfunction, electrical shock, or fire.

5. If connecting power to fixed wiring, install a surge protector and main power switch with a capacity of 1.5 times the maximum current of the unit.

6. If connecting power to fixed wiring, a switch or circuit breaker that disconnects all poles and has a contact separation of at least 1/8in (3mm) must be incorporated in the fixed wiring. The qualified technician must use an approved circuit breaker or switch.

7. Only connect the unit to an individual branch circuit outlet. Do not connect another appliance to that outlet.

8. Make sure to properly ground the air conditioner.

9. Every wire must be firmly connected. Loose wiring can cause the terminal to overheat, resulting in product malfunction and possible fire.

10. Do not let wires touch or rest against refrigerant tubing, the compressor, or any moving parts within the unit.

11. If the unit has an auxiliary electric heater, it must be installed at least 1 meter (40in) away from any combustible materials.

12. BEFORE PERFORMING ANY ELECTRICAL OR WIRING WORK, TURN OFF THE MAIN POWER TO THE SYSTEM.

3.6.2 Connect signal cable

The signal cable enables communication between the indoor and outdoor units. You must first choose the right cable size before preparing it for connection.

Cable Types:

- Indoor Power Cable (if applicable): H05VV-F or H05V2V2-F
- Outdoor Power Cable: H07RN-F
- Signal Cable: H07RN-F

For Aurora series, Forest series & BREEZELESS series:

1. Prepare the cable for connection:

- Using wire strippers, strip the rubber jacket from both ends of signal cable to reveal about 40mm (1.57in) of the wires inside.
- Strip the insulation from the ends of the wires.
- Using wire crimper, crimp u-Type lugs on the ends of the wires.

2. Open front panel of the indoor unit.

3. Using a screwdriver, open the wire box cover on the right side of the unit. This will reveal the terminal block.

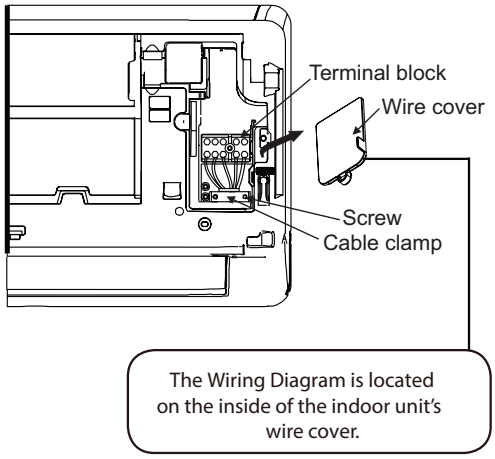

4. Unscrew the cable clamp below the terminal block and place it to the side.

5. Facing the back of the unit, remove the plastic panel on the bottom left-hand side.

6. Feed the signal wire through this slot, from the back of the unit to the front.

7. Facing the front of the unit, match the wire colors with the labels on the terminal block, connect the u-lug and and firmly screw each wire to its corresponding terminal.

8. After checking to make sure every connection is secure, use the cable clamp to fasten the signal cable to the unit.

Screw the cable clamp down tightly.

9. Replace the wire cover on the front of the unit, and the plastic panel on the back.

For All Easy series:

1. Open front panel of the indoor unit by loosen the screws according to picture below, which provide big space for wiring connection.

2. Open the wire box cover to connect the cable.

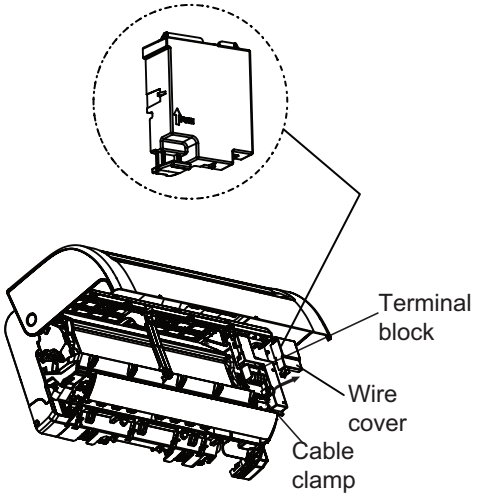

3.Unscrew the cable clamp below the terminal block and place it to the side.

4.Facing the back of the unit, remove the plastic panel on the bottom left-hand side.

5. Feed the signal wire through this slot, from the back of the unit to the front.

6. Facing the front of the unit, connect the wire according to the indoor unit's wiring diagram, connect the u-lug and firmly screw each wire to its corresponding terminal.

7. After checking to make sure every connection is secure, use the cable clamp to fasten the signal cable to the unit. Screw the cable clamp down tightly.

8. Replace the wire cover on the front of the unit, and the plastic panel on the back.

For XTREME series:

1. Open front panel of the indoor unit.

2.Using a screwdriver, open the wire box cover on the right side of the unit. This will reveal the terminal block.

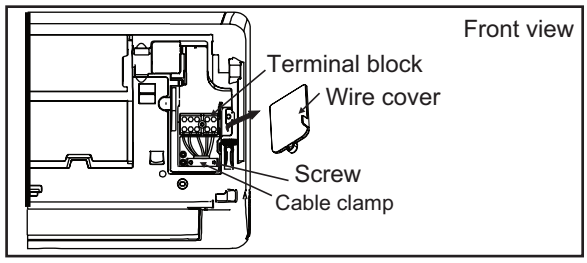

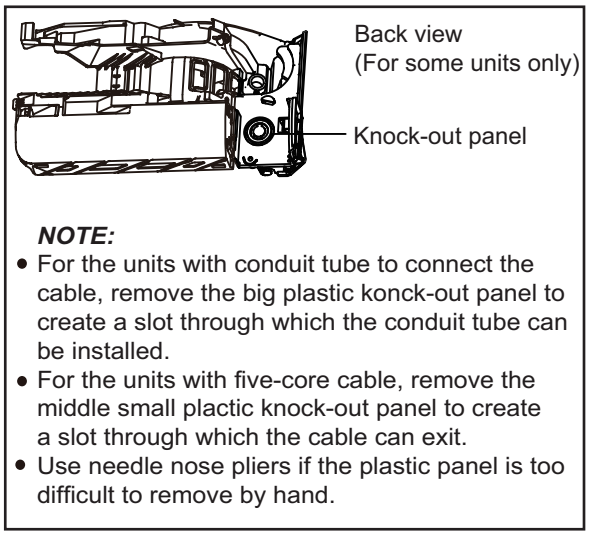

3.Unscrew the cable clamp below the terminal block and place it to the side.

4.Facing the back of the unit, remove the plastic panel on the bottom left-hand side.

5.Feed the signal wire through this slot, from the back of the unit to the front.

6.Facing the front of the unit, connect the wire according to the indoor unit's wiring diagram, connect the u-lug and firmly screw each wireto its corresponding terminal.

7. After checking to make sure every connectionis secure, use the cable clamp to fasten the signal cable to the unit. Screw the cable clamp down tightly.

8. Replace the wire cover on the front of the unit, and the plastic panel on the back.

NOTE:

- Choose the right cable size

The size of the power supply cable, signal cable, fuse, and switch needed is determined by the maximum current of the unit. The maximum current is indicated on the nameplate located on the side panel of the unit. Refer to this nameplate to choose the right cable, fuse, or switch.

- Take note of fuse specifications

The air conditioner's circuit board (PCB) is designed with a fuse to provide overcurrent protection. The specifications of the fuse are printed on the circuit board, such as: Indoor

unit: T3.15AL/250VAC, T5AL/250VAC, T3.15A/250VAC, T5A/250VAC, T20A/250VAC, T30A/250VAC, etc.(The fuse is made of ceramic.)

- Pay attention to live wire

While crimping wires, make sure you clearly distinguish the Live ("L") Wire from other wires.

- All wiring must performed strictly in accordance with the wiring diagram located on the inside of the indoor unit's wire cover.
- Do not mix up live and null wires.

This is dangerous, and can cause the air conditioning unit to malfunction.

- The wiring connection process may differ slightly between units.

3.7 Wrap piping and cables

Before passing the piping, drain hose, and the signal cable through the wall hole, you must bundle them together to save space, protect them, and insulate them.

1. Bundle the drain hose, refrigerant pipes, and signal cable according to the picture below:

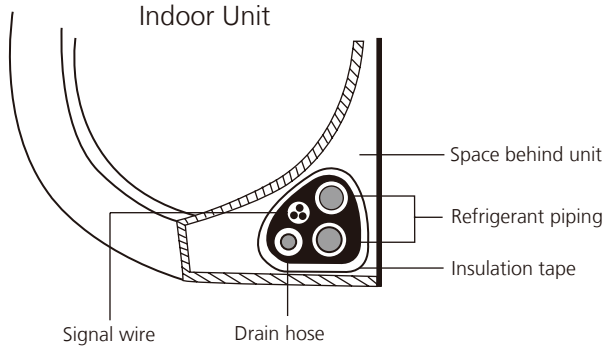

2. Using adhesive vinyl tape, attach the drain hose to the underside of the refrigerant pipes.

3. Using insulation tape, wrap the signal wire, refrigerant pipes, and drain hose tightly together. Double-check that all items are bundled in accordance with the picture above.

NOTE:

- Drain hose must be on bottom

Make sure that the drain hose is at the bottom of the bundle. Putting the drain hose at the top of the bundle can cause the drain pan to overflow, which can lead to fire or water damage.

- Do not intertwine signal cable with other wires

While bundling these items together, do not intertwine or cross the signal cable with any other wiring

- Do not wrap ends of piping

When wrapping the bundle, keep the ends of the piping unwrapped. You need to access them to test for leaks at the end of the installation process.

3.8 Mount indoor unit

3.8.1 If you installed new connective piping to the outdoor unit, do the following:

1. If you have already passed the refrigerant piping through the hole in the wall, proceed to **step 4.**

2. Otherwise, double-check that the ends of the refrigerant pipes are sealed to prevent dirt or foreign materials from entering the pipes.

3. Slowly pass the wrapped bundle of refrigerant pipes, drain hose, and signal wire through the hole in the wall.

4. Hook the top of the indoor unit on the upper hook of the mounting plate.

5. Check that unit is hooked firmly on mounting by applying slight pressure to the left and right-hand sides of the unit. The unit should not jiggle or shift.

6. Using even pressure, push down on the bottom half of the unit. Keep pushing down until the unit snaps onto the hooks along the bottom of the mounting plate.

7. Again, check that the unit is firmly mounted by applying slight pressure to the left and the right-hand sides of the unit.

3.8.2 If refrigerant piping is already embedded in the wall, do the following:

For Aurora series, Forest series, XTREME series &BREEZELESS series& BREEZELESS E series:

1. Hook the top of the indoor unit on the upper hook of the mounting plate.

- Unit is adjustable

Keep in mind that the hooks on the mounting plate are smaller than the holes on the back of the unit. If you find that you don't have ample room to connect embedded pipes to the indoor unit, the unit can be adjusted left or right by about 30-50mm (1.25-1.95in), depending on the model.

Move to left or right

2. Use the holder in the mounting plate to prop up the unit, giving you enough room to connect the refrigerant piping, signal cable, and drain hose.

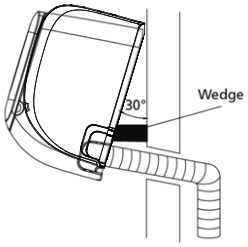

3. Connect drain hose and refrigerant piping (refer to Refrigerant Piping Connection section of this manual for instructions).

4. Keep pipe connection point exposed to perform the leak test (refer to Electrical Checks and Leak Checks section of this manual).

5. After the leak test, wrap the connection point with insulation tape.

6. Remove the bracket or wedge that is propping up the unit.

7. Using even pressure, push down on the bottom half of the unit. Keep pushing down until the unit snaps onto the hooks along the bottom of the mounting plate.

For All Easy series:

Step 1:Hook the indoor unit on the mounting plate:

1. Keep in mind that the hooks on the mounting plate are smaller than the holes on the back of the unit.If you find that you don't have ample room to connect embedded pipes to the indoor unit, the unit can be adjusted left or right by about 30-50mm (1.25-1.95in), depending on the model.

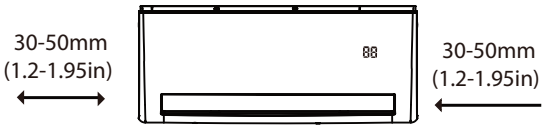

Move to left or right

Step 2: Prepare refrigerant piping:

1. Disassemble the louver:

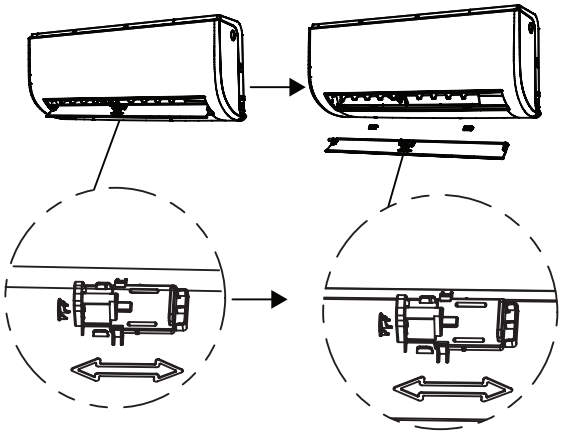

2. Open and fix the position of the panel

Firstly, unscrew the two screws showed in the picture below, then open the panel, and fix the position of the panel by the latch.

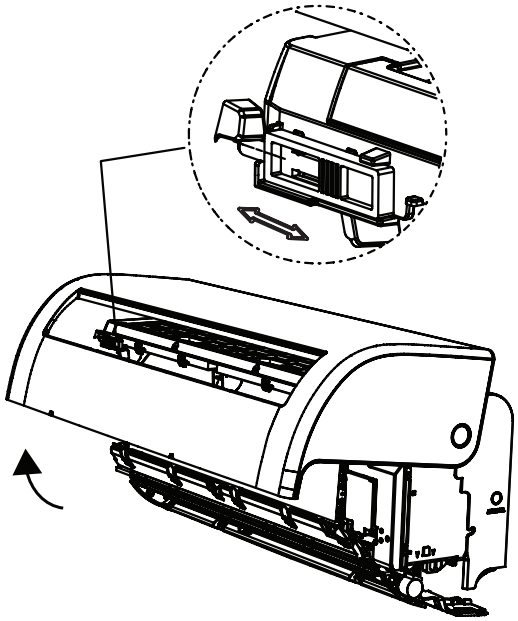

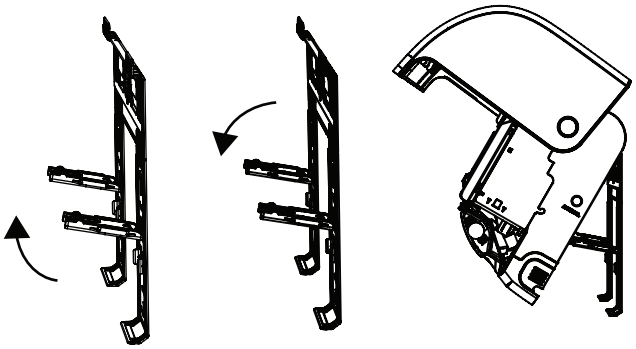

3. Use the holder in the mounting plate to prop up the unit, giving you enough room to connect the refrigerant piping, signal cable, and drain hose.

Step 3. Connect drain hose and refrigerant piping (refer to Refrigerant Piping Connection section of this manual for instructions).

Step 4. Keep pipe connection point exposed to perform the leak test (refer to Electrical Checks and Leak Checks section of this manual).

Step 5. After the leak test, wrap the connection point with insulation tape.

Step 6. Remove the bracket or wedge that is propping with insulation tape.

Step 7. Using even pressure, push down on the bottom half of the unit. Keep pushing down until the unit snaps onto the hooks along the bottom of the mounting plate.

4. Outdoor Unit Installation

4.1 Service space for outdoor unit

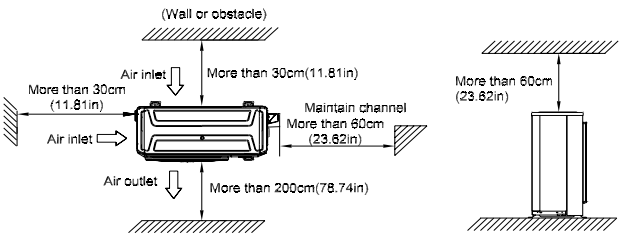

4.2 Bolt pitch

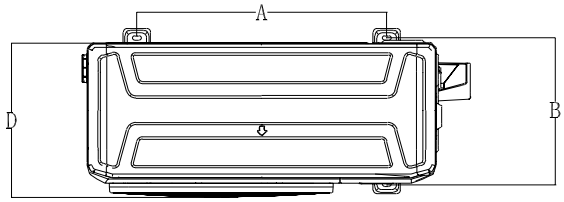

Model	A	B	D
M2OG-14HFN8-Q	514	340	333
M2OC-18HFN8-Q			
M2OD-18HFN8-Q			
M3OF-21HFN8-Q	540	350	363
M3OE-27HFN8-Q			
M3OF-27HFN8-Q			
M3OC-27HFN8-Q	673	403	410
M4OE-28HFN8-Q			
M4OC-36HFN8-Q			
M4OB-36HFN8-Q			
M4OA-27HFN8-Q(HRU)			
M4OB-27HFN8-Q(HRU)			
M5OD-42HFN8-Q			
M5OE-42HFN8-Q			
M2OH-14HFN8-Q	511	317	330
M2OE-18HFN8-Q			
M3OA-18HFN8-Q			
M2OF-18HFN8-Q	663	354	342
M3OA-18HFN8-Q(HRU)			
M3OG-21HFN8-Q			
M4OA-24HFN8-Q			
M3OB-27HFN8-Q			
M3OA-27HFN8-Q			

4.3 Install Outdoor Unit

Fix the outdoor unit with anchor bolts(M10)

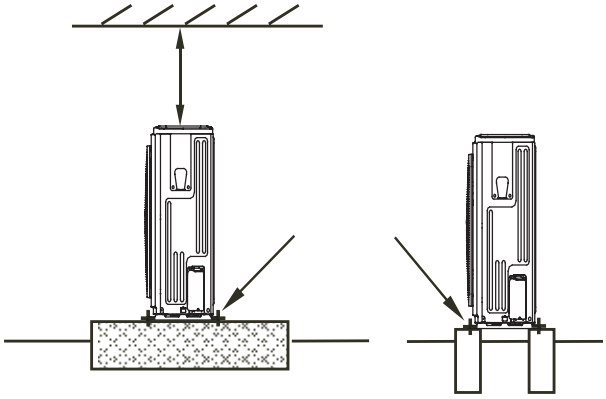

Cation

Since the gravity center of the unit is not at its physical center, so please be careful when lifting it with a sling.

Never hold the inlet of the outdoor unit to prevent it from deforming.

Do not touch the fan with hands or other objects.

Do not lean it more than 45, and do not lay it sidelong.

Make concrete foundation according to the specifications of the outdoor units.

Fasten the feet of this unit with bolts firmly to prevent it from collapsing in case of earthquake or strong wind.

5. Drainage Pipe Installation

Install the drainage pipe as shown below and take measures against condensation. Improperly installation could lead to leakage and eventually wet furniture and belongings.

5.1 Installation principle

- Ensure at least 1/100 slope of the drainage pipe
- Adopt suitable pipe diameter
- Adopt nearby condensate water discharge

5.2 Key points of drainage water pipe installation

1. Considering the pipeline route and elevation.
   - Before installing condensate water pipeline, determine its route and elevation to avoid intersection with other pipelines and ensure slope is straight.
2. Drainage pipe selection
   - The drainage pipe diameter shall not small than the drain hose of indoor unit
   - According to the water flowrate and drainage pipe slope to choose the suitable pipe, the water flowrate is decided by the capacity of indoor unit.

Relationship between water flowrate and capacity of indoor unit

Capacity (kBtu)	Water flowrate (l/h)
12	2.4
18	4
24	6
30	7
36	8
42	10
48	12
55	14

According to the above table to calculate the total water flowrate for the confluence pipe selection.

For horizontal drainage pipe (The following table is for reference)

PVC pipe	Reference value of inner diameter of pipe (mm)	Allowable maximum water flowrate (l/h)		Remark
		Slope 1/50	Slope 1/100	
PVC25	20	39	27	For branch pipe
PVC32	25	70	50	
PVC40	31	125	88	Could be used for confluence pipe
PVC50	40	247	175	
PVC63	51	473	334	

Attention: Adopt PVC40 or bigger pipe to be the main pipe.

For Vertical drainage pipe (The following table is for reference)

PVC pipe	Reference value of inner diameter of pipe (mm)	Allowable maximum water flowrate (l/h)	Remark
PVC25	20	220	For branch pipe
PVC32	25	410	
PVC40	31	730	Could be used for confluence pipe
PVC50	40	1440	
PVC63	51	2760	
PVC75	67	5710	
PVC90	77	8280	

Attention: Adopt PVC40 or bigger pipe to be the main pipe.

3. Individual design of drainage pipe system
   - The drainage pipe of air conditioner shall be installed separately with other sewage pipe, rainwater pipe and drainage pipe in building.
   - The drainage pipe of the indoor unit with water pump should be apart from the one without water pump.
4. Supporter gap of drainage pipe
   - In general, the supporter gap of the drainage pipe horizontal pipe and vertical pipe is respectively 1m~1.5m and 1.5m~2.0m.
   - Each vertical pipe shall be equipped with not less than two hangers.
   - Overlarge hanger gap for horizontal pipe shall create bending, thus leading to air block.

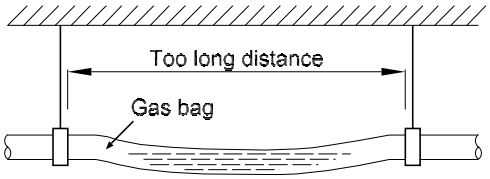

5. The horizontal pipe layout should avoid converse flow or bad flow

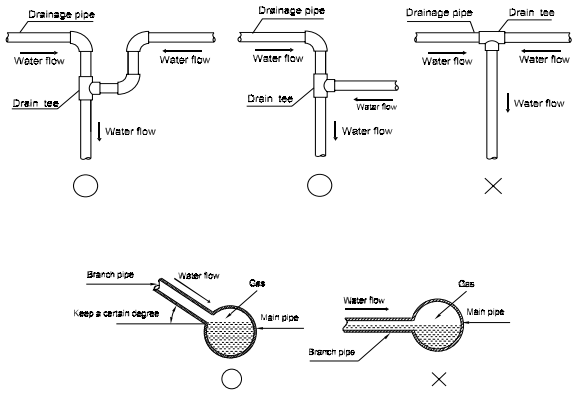

- The correct installation will not cause converse water flow and the slope of the branch pipes can be adjusted freely
- The false installation will cause converse water flow and the slope of the branch pipe can not be adjusted.

6. Water storage pipe setting

- If the indoor unit has high extra static pressure and without water pump to elevate the condensate water, such as high extra static pressure duct unit , the water storage pipe should be set to avoid converse flow or blow water phenomena.

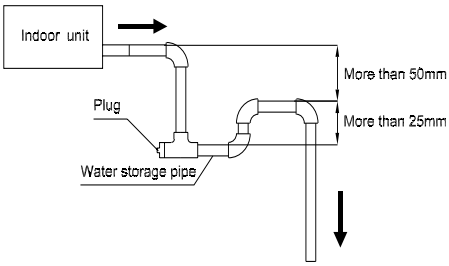

7. Lifting pipe setting of indoor unit with water pump

- The length of lifting pipe should not exceed 750mm.
- The drainage pipe should be set down inclined after the lifting pipe immediately to avoid wrong operation of water level switch.
- Refer the following picture for installation reference.

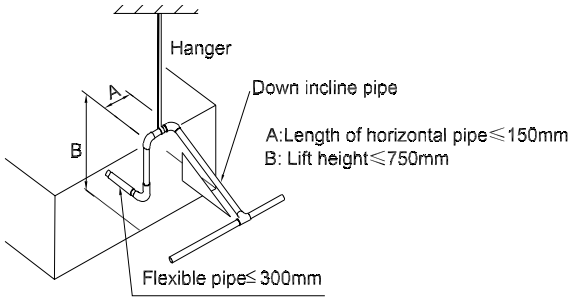

8. Blowhole setting

- For the concentrated drainage pipe system, there should design a blowhole at the highest point of main pipe to ensure the condensate water discharge smoothly.
- The air outlet shall face down to prevent dirt entering pipe.
- Each indoor unit of the system should be installed it.
- The installation should be considering the convenience for future cleaning.

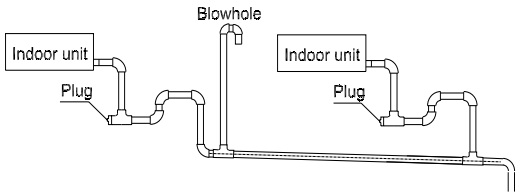

9. The end of drainage pipe shall not contact with ground directly.

5.3 Drainage test

For A6 duct type&7k~12k A7 duct type:

1. Water leakage test

- After finishing the construction of drainage pipe system, fill the pipe with water and keep it for 24 hours to check whether there is leakage at joint section.

2. Water discharge test

Check that the drainpipe is unhindered.

This test should be performed on newly built houses before the ceiling is paved.

2.1 Units without a pump

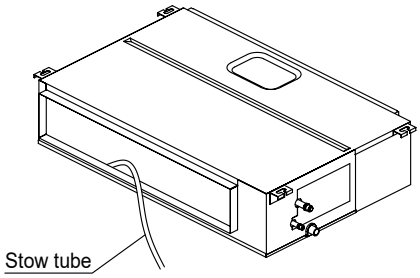

- Fill the water pan with 2 liters of water.
- Check that the drainpipe is unhindered

.2.2 Units with a pump

1. Remove the test cover.
- Fill the water pan with 2 liters of water.

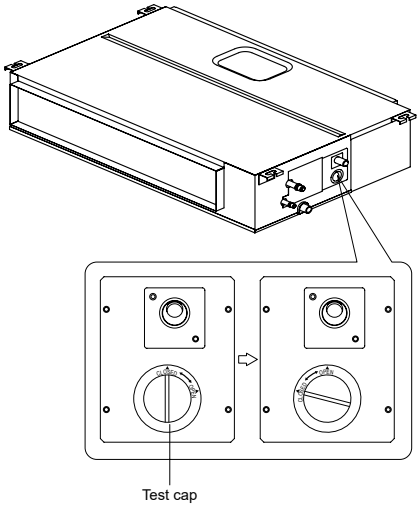

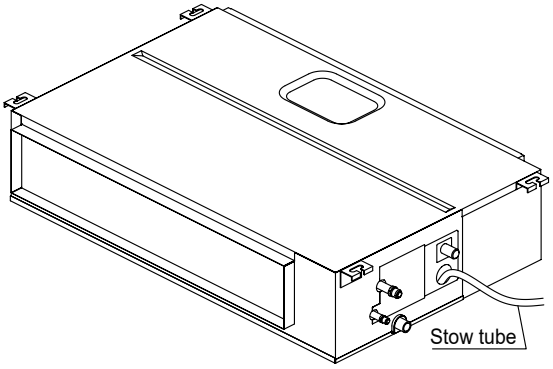

2. Turn on the unit in COOLING mode. You will hear the drain pump.Check whether the water is discharged properly (a 1-minute lag is possible, depending on the length of the drain pipe), Check whether water leaks from

the joints.

3. Turn off the air conditioner and put the cap back on.
   - After turn off the air conditioner 3 minutes, check whether there is anything abnormal. If drainage pipes have not been distributed properly, over back-flow water shall cause the flashing of alarm indicator at remote-controlled receiving board and even water shall run over the water collector.
   - Continuously infusing water until water level alarmed, check whether the drainage pump could discharge water at once. If water level does not decline under warning water level 3 minutes later, it shall cause shutdown of unit. When this situation happens, the normal startup only can be recovered by turning down power supply and eliminating accumulated water.

Note: Drain plug at the main water-containing plate is used for eliminating accumulated water in water-containing plate when maintaining air conditioner fault. During normal operation, the plug shall be filled in to prevent leakage.

For A7 duct type(18k~24k):

The procedure differs depending on whether electrical wiring is already finished. When the electrical wiring is not finished yet, you need to temporarily connect the user interface and power supply to the unit.

When electrical wiring is not finished yet

1. Temporarily connect electrical wiring.

2. Remove the switch box cover (a).

3. Connect the single-phase power supply (50 Hz, 230 V) to connections No. 1 and No. 2 on the terminal block for power supply and earth.

4. Reattach the switch box cover (a).

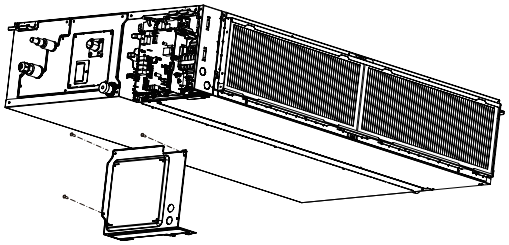

5.Turn ON the power.

6. Start cooling operation (see “11. Test Operation”).

7. Gradually pour approximately 1 l of water through the air discharge outlet, and check for leaks.

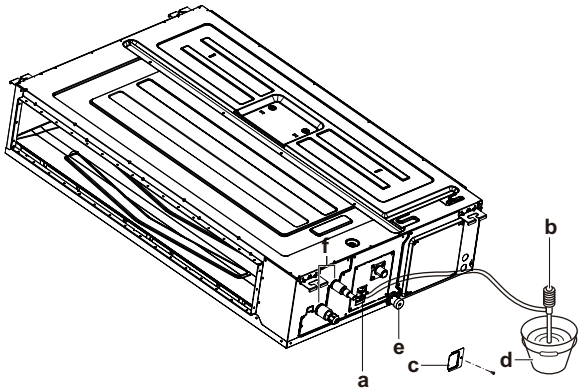

a Water inlet

b Portable pump

c Water inlet cover

d Bucket (adding water through water inlet)

e Drain outlet for maintenance

f Refrigerant pipes

8. Turn OFF the power.

9. Disconnect the electrical wiring.

10. Remove the control box cover.

11. Disconnect the power supply and earth.

12. Reattach the control box cover.

When electrical wiring is finished already

1. Start cooling operation (see "11. Test Operation").

2. Gradually pour approximately 1 l of water through the air discharge outlet, and check for leaks.

5.4 Insulation work of drainage pipe

Refer the introduction to the insulation engineering parts.

6. Refrigerant Pipe Installation

6.1 Maximum length and drop height

Ensure that the length of the refrigerant pipe and the drop height between the indoor and outdoor units meets the requirements shown in the following table.

	1 drive 2	1 drive 3	1 drive 4	1 drive 5
Max. length for all rooms	40	60	80	80
Max. length for one indoor unit	25	30	35	35
Max. height different between IDU and ODU	15	15	15	15
Max. height different between IDUs	10	10	10	10

- **Oil traps**

-If oil flows back into the outdoor unit's compressor, this might cause liquid compression or deterioration of oil return. Oil traps in the rising gas piping can prevent this.

-An oil trap should be installed every 6m(20ft) of vertical suction line riser (<36000Btu/h unit).

-An oil trap should be installed every 10m(32.8ft) of vertical suction line riser (≥36000Btu/h unit).

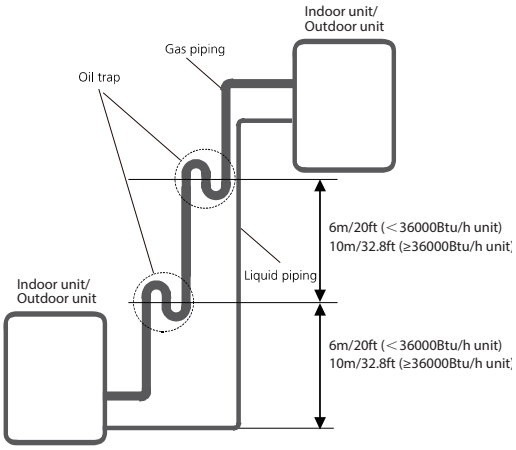

- When installing multiple indoor units with a single outdoor unit, ensure that the length of the refrigerant pipe and the drop height between the indoor and outdoor units meet the requirements illustrated in the following diagram:

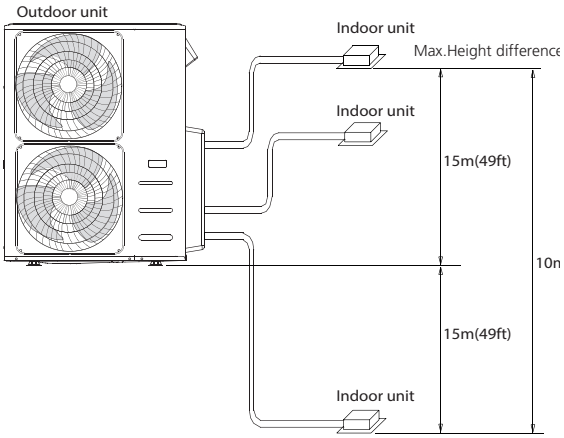

6.2 The procedure of connecting pipes

1.Choose the pipe size according to the specification table.

2.Confirm the cross way of the pipes.

3.Measure the necessary pipe length.

4.Cut the selected pipe with pipe cutter

- Make the section flat and smooth.

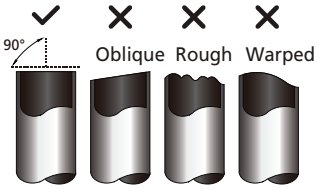

5. Insulate the copper pipe

- Before test operation, the joint parts should not be heat insulated.

6. Flare the pipe

- Insert a flare nut into the pipe before flaring the pipe
- According to the following table to flare the pipe.

Pipe diameter (inch(mm))	Flare dimension A (mm/inch)		Flare shape
	Min	Max	
1/4" (6.35)	8.4/0.33	8.7/0.34	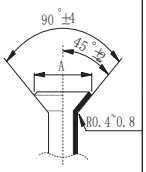
3/8" (9.52)	13.2/0.52	13.5/0.53	
1/2" (12.7)	16.2/0.64	16.5/0.65	
5/8" (15.9)	19.2/0.76	19.7/0.78	
3/4" (19)	23.2/0.91	23.7/0.93	
7/8" (22)	26.4/1.04	26.9/1.06	

- After flared the pipe, the opening part must be seal by end cover or adhesive tape to avoid duct or exogenous impurity come into the pipe.

7. Drill holes if the pipes need to pass the wall.

8. According to the field condition to bend the pipes so that it can pass the wall smoothly.

9. Bind and wrap the wire together with the insulated pipe if necessary.

10. Set the wall conduit

11. Set the supporter for the pipe.

12. Locate the pipe and fix it by supporter

- For horizontal refrigerant pipe, the distance between supporters should not be exceed 1m.
- For vertical refrigerant pipe, the distance between supporters should not be exceed 1.5m.

13. Connect the pipe to indoor unit and outdoor unit by using two spanners.

- Be sure to use two spanners and proper torque to fasten the nut, too large torque will damage the bell mouthing, and too small torque may cause leakage. Refer the following table for different pipe connection.

Pipe Diameter	Torque N.m(lb.ft)	Sketch map
1/4" (6.35)	18~20 (13.3~14.8)	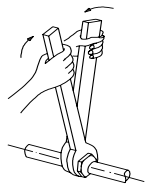
3/8" (9.52)	32~39 (23.6~28.8)	
1/2" (12.7)	49~59 (36.1~43.5)	
5/8" (15.9)	57~71 (42~52.4)	
3/4" (19)	67~101 (49.4~74.5)	
7/8" (22)	85-110 (62.7-81.1)	

7. Vacuum Drying and Leakage Checking

7.1 Purpose of vacuum drying

- Eliminating moisture in system to prevent the phenomena of ice-blockage and copper oxidation.

  Ice-blockage shall cause abnormal operation of system, while copper oxide shall damage compressor.
- Eliminating the non-condensable gas (air) in system to prevent the components oxidizing, pressure fluctuation and bad heat exchange during the operation of system.

7.2 Selection of vacuum pump

- The ultimate vacuum degree of vacuum pump shall be -756mmHg or above.
- Precision of vacuum pump shall reach 0.02mmHg or above.

7.3 Operation procedure for vacuum drying

Due to different construction environment, two kinds of vacuum drying ways could be chosen, namely ordinary vacuum drying and special vacuum drying.

7.3.1 Ordinary vacuum drying

1. When conduct first vacuum drying, connect pressure gauge to the infusing mouth of gas pipe and liquid pipe,

and keep vacuum pump running for 1hour (vacuum degree of vacuum pump shall be reached -755mmHg).

2. If the vacuum degree of vacuum pump could not reach -755mmHg after 1 hour of drying, it indicates that there is moisture or leakage in pipeline system and need to go on with drying for half an hour.

3. If the vacuum degree of vacuum pump still could not reach -755mmHg after 1.5 hours of drying, check whether there is leakage source.

4 . Leakage test: After the vacuum degree reaches -755mmHg, stop vacuum drying and keep the pressure for 1 hour. If the indicator of vacuum gauge does not go up, it is qualified. If going up, it indicates that there is moisture or leak source.

7.3.2 Special vacuum drying

The special vacuum drying method shall be adopted when:

1. Finding moisture during flushing refrigerant pipe.

2. Conducting construction on rainy day, because rain water might penetrated into pipeline.

3. Construction period is long, and rain water might penetrated into pipeline.

4. Rain water might penetrate into pipeline during construction.

Procedures of special vacuum drying are as follows:

1. Vacuum drying for 1 hour.

2. Vacuum damage, filling nitrogen to reach 0.5Kgf/cm2 .

Because nitrogen is dry gas, vacuum damage could achieve the effect of vacuum drying, but this method could not achieve drying thoroughly when there is too much moisture. Therefore, special attention shall be drawn to prevent the entering of water and the formation of condensate water.

3. Vacuum drying again for half an hour.

If the pressure reached -755mmHg, start to pressure leakage test. If it cannot reached the value, repeat vacuum damage and vacuum drying again for 1 hour.

4. Leakage test: After the vacuum degree reaches -755mmHg, stop vacuum drying and keep the pressure for 1 hour. If the indicator of vacuum gauge does not go up, it is qualified. If going up, it indicates that there is moisture or leak source.

8. Additional Refrigerant Charge

- After the vacuum drying process is carried out, the additional refrigerant charge process need to be performed.
- The outdoor unit is factory charged with refrigerant. The additional refrigerant charge volume is decided by the diameter and length of the liquid pipe between indoor and outdoor unit. Refer the following formula to calculate the charge volume.

Diameter of liquid pipe (mm)	Formula
6.35	V=12g/m×((Total pipe length - pre-charge pipe lengthxN))
9.52	V=24g/m×((Total pipe length - pre-charge pipe lengthxN))

The pre-charge pipe length is 7.5m.

Note:

- Refrigerant may only be charged after performed the vacuum drying process.
- Always use gloves and glasses to protect your hands and eyes during the charge work.
- Use electronic scale or fluid infusion apparatus to weight refrigerant to be recharged. Be sure to avoid extra refrigerant charged, it may cause liquid hammer of the compressor or protections.
- Use supplementing flexible pipe to connect refrigerant cylinder, pressure gauge and outdoor unit. And The refrigerant should be charged in liquid state. Before recharging, The air in the flexible pipe and manifold gauge should be exhausted.
- After finished refrigerant recharge process, check whether there is refrigerant leakage at the connection joint part.(Using gas leakage detector or soap water to detect).

9. Engineering of Insulation

9.1 Insulation of refrigerant pipe

1. Operational procedure of refrigerant pipe insulation

Cut the suitable pipe → insulation (except joint section) → flare the pipe → piping layout and connection→ vacuum drying → insulate the joint parts

2. Purpose of refrigerant pipe insulation

- During operation, temperature of gas pipe and liquid pipe shall be over-heating or over-cooling extremely. Therefore, it is necessary to carry out insulation; otherwise it shall debase the performance of unit and burn compressor.
- Gas pipe temperature is very low during cooling. If insulation is not enough, it shall form dew and cause leakage.
- Temperature of gas pipe is very high (generally 50-100°C) during heating. Insulation work must be carried out to prevent hurt by carelessness touching.

3. Insulation material selection for refrigerant pipe

- The burning performance should over 120°C
- According to the local law to choose insulation materials
- The thickness of insulation layer shall be above 10mm.If in hot or wet environment place, the layer of insulation should be thicker accordingly.

4. Installation highlights of insulation construction

- Gas pipe and liquid pipe shall be insulated separately, if the gas pipe and liquid pipe were insulated together; it will decrease the performance of air conditioner.

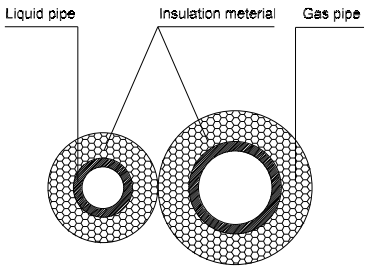

- The insulation material at the joint pipe shall be 5~10cm longer than the gap of the insulation material.
- The insulation material at the joint pipe shall be inserted into the gap of the insulation material.
- The insulation material at the joint pipe shall be banded to the gap pipe and liquid pipe tightly.
- The linking part should be use glue to paste together
- Be sure not bind the insulation material over-tight, it may extrude out the air in the material to cause bad insulation and cause easy aging of the material.

9.2 Insulation of drainage pipe

1. Operational procedure of refrigerant pipe insulation

Select the suitable pipe → insulation (except joint section) → piping layout and connection→ drainage test→ insulate the joint parts

2. Purpose of drainage pipe insulation

The temperature of condensate drainage water is very low. If insulation is not enough, it shall form dew and cause leakage to damage the house decoration.

3. Insulation material selection for drainage pipe

- The insulation material should be flame retardant material, the flame retardancy of the material should be selected according to the local law.
- Thickness of insulation layer is usually above 10mm.
- Use specific glue to paste the seam of insulation material, and then bind with adhesive tape. The width of tape shall not be less than 5cm. Make sure it is firm and avoid dew.

4. Installation and highlights of insulation construction

- The single pipe should be insulated before connecting to another pipe, the joint part should be insulated after the drainage test.
- There should be no insulation gap between the insulation material.

10. Engineering of Electrical Wiring

10.1 Highlights of electrical wiring installation

- All field wiring construction should be finished by qualified electrician.
- Air conditioning equipment should be grounded according to the local electrical regulations.
- Current leakage protection switch should be installed.
- Do not connect the power wire to the terminal of signal wire.
- When power wire is parallel with signal wire, put wires to their own wire tube and remain at least 300mm gap.
- According to table in indoor part named "the specification of the power" to choose the wiring, make sure the selected wiring not small than the date showing in the table.
- Select different colors for different wire according to relevant regulations.
- Do not use metal wire tube at the place with acid or alkali corrosion, adopt plastic wire tube to replace it.
- There must be not wire connect joint in the wire tube If joint is a must, set a connection box at the place.
- The wiring with different voltage should not be in one wire tube.
- Ensure that the color of the wires of outdoor and the terminal No. are same as those of indoor unit respectively.
- You must first choose the right cable size before preparing it for connection. Be sure to use H07RN-F cables.

Table: Minimum Cross-Sectional Area able of Power and Signal Cables

Rated Current of Appliance (A)	Nominal Cross-Sectional Area(mm^2)
≤ 6	0.75
6 - 10	1
10 - 16	1.5
16 - 25	2.5
25 - 32	4
32 - 45	6

11. Test Operation

11.1 The test operation must be carried out after the entire installation has been completed.

11.2 Please confirm the following points before the test operation.

- The indoor unit and outdoor unit are installed properly.
- Tubing and wiring are correctly completed.
- The refrigerant pipe system is leakage-checked.
- The drainage is unimpeded.
- The ground wiring is connected correctly.
- The length of the tubing and the added stow capacity of the refrigerant have been recorded.
- The power voltage fits the rated voltage of the air conditioner.
- There is no obstacle at the outlet and inlet of the outdoor and indoor units.
- The gas-side and liquid-side stop values are both opened.
- The air conditioner is pre-heated by turning on the power.

11.3 Test operation

1. Open both the liquid and gas stop valves.

2. Turn on the main power switch and allow the unit to warm up.

3. Set the air conditioner to COOL mode, and check the following points.

Indoor unit

- Whether the switch on the remote controller works well.
- Whether the buttons on the remote controller works well.
- Whether the air flow louver moves normally.
- Whether the room temperature is adjusted well.
- Whether the indicator lights normally.
- Whether the temporary buttons works well.
- Whether the drainage is normal.
- Whether there is vibration or abnormal noise during operation.

Outdoor unit

- Whether there is vibration or abnormal noise during operation.
- Whether the generated wind, noise, or condensed of by the air conditioner have influenced your neighborhood.
- Whether any of the refrigerant is leaked.

Drainage Test

a. Ensure the drainpipe flows smoothly. New buildings should perform this test before finishing the ceiling.

b. Remove the test cover. Add 2000ml of water to the tank through the attached tube.

c.Turn on the main power switch and run the air conditioner in COOL mode.

d. Listen to the sound of the drain pump to see if it makes any unusual noises.

e. Check to see that the water is discharged. It may take up to one minute before the unit begins to drain depending on the drainpipe.

f. Make sure that there are no leaks in any of the piping.

g. Stop the air conditioner. Turn off the main power switch and reinstall the test cover.

11.4 If ambient temperature is below 17°C (62°F) or 16°C (60°F)

You can't use the remote controller to turn on the COOL function when the ambient temperature is below 17°C. In this instance, you can use the MANUAL CONTROL button to test the COOL function.

1. Lift the front panel of the indoor unit, and raise it until it clicks in place.

2. The MANUAL CONTROL button is located on the right-hand side of the display box. Press it two times to select the COOL function.

3. Perform Test Run as normal.

Static Pressure Design

Contents

1. Introduction

Duct system losses are the irreversible transformation of mechanical energy into heat. The two Types of losses are (1) friction losses and (2) dynamic losses.

Friction losses are due to fluid viscosity and result from momentum exchange between molecules (in laminar flow) or between individual particles of adjacent fluid layers moving at different velocities (in turbulent flow). Friction losses occur along the entire duct length.

Dynamic losses result from flow disturbances caused by duct mounted equipment and fittings (e.g., entries, exits, elbows, transitions, and junctions) that change the airflow path's direction or area.

2. Charts For Friction Losses In Round Ducts

Fluid resistance caused by friction in round ducts can be determined by the friction chart. (based on galvanized sheet)

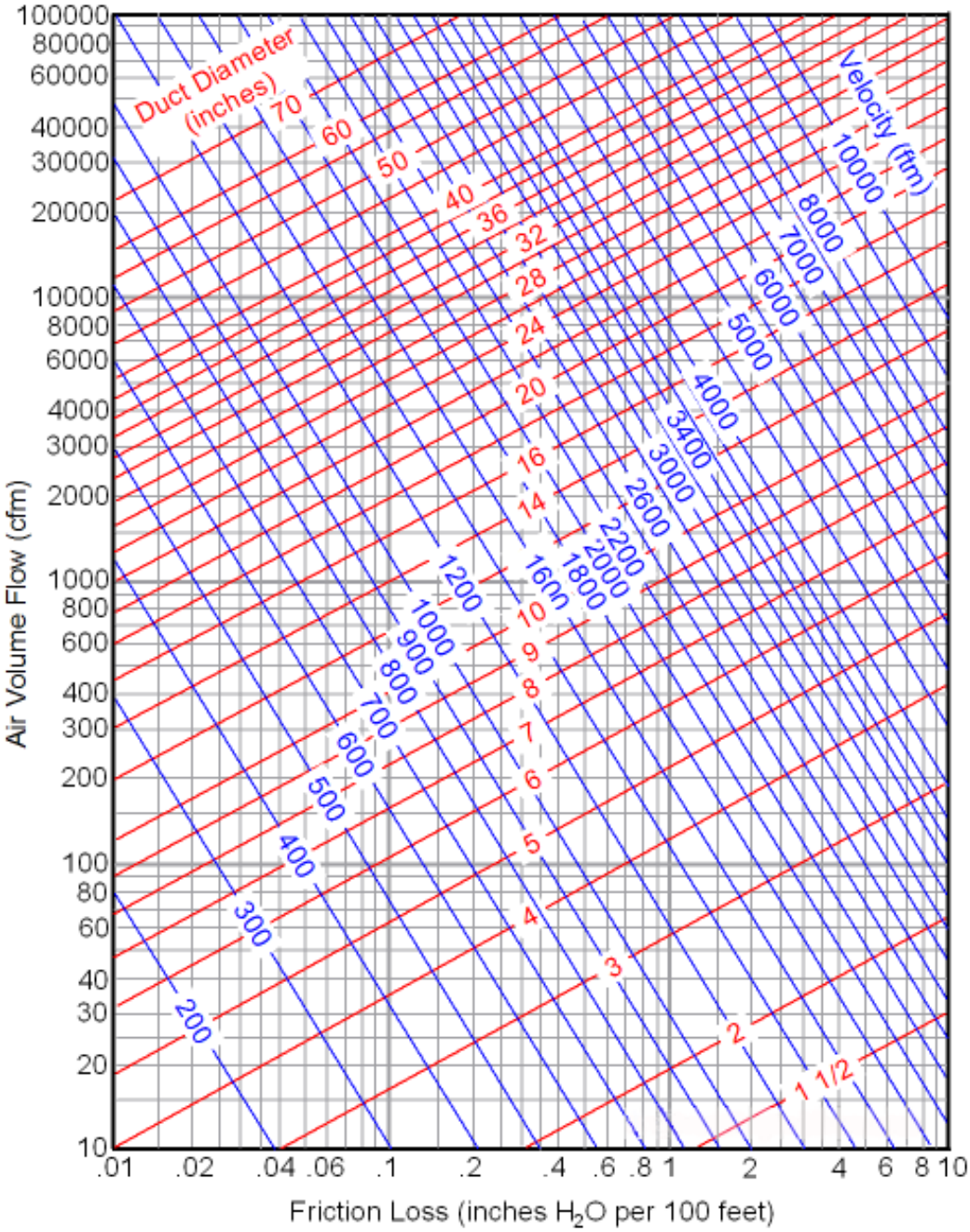

3. Dynamic Losses

For dynamic losses, please refer to below image.

H' =

Elbow (r/w = 1)

V m/s	loss mm H_2O
3.5~5	0.2
5~7	0.4
7~9	0.8
9~15	2

x piece

+ **Sharp elbow (r/w = 0.5)**

V m/s	loss mm H_2O
3.5~5	1
5~7	2
7~9	3.5
9~15	7

x piece

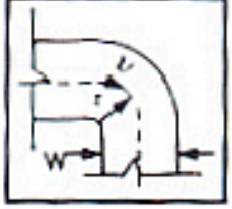

+ **Branch Straight-Thru**

No friction loss

+ **Branch Thru-Branch (r/w = 1)**

V m/s	loss mm H_2O
3.5~5	0.4
5~7	0.8
7~9	1.5
9~15	3

x piece

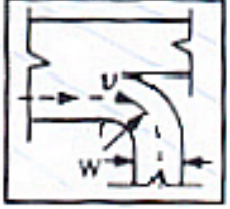

+ **Reducer θ ≦ 14°**

V m/s	loss mm H_2O
3.5~5	0.2
5~7	0.4
7~9	0.8
9~15	2

x piece

+ **Anemostat**

V m/s	loss mm H_2O
3.5~5	1
5~7	2
7~9	3.5
9~15	6

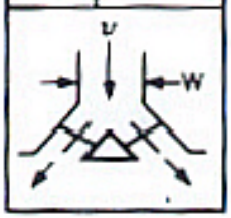

+ **Gallery or louver**

V m/s	loss mm H_2O
3.5~5	0.5
5~7	1
7~9	2

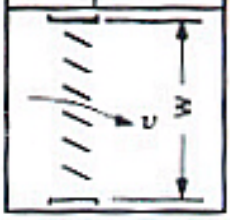

+ **Register**

V m/s	loss mm H_2O
3.5~5	1.5
5~7	3
7~9	6

+ **Hopper**

V m/s	loss mm H_2O
3.5~5	0.3
5~7	0.6
7~9	1

Note: W Shows a diameter of round duct or long side length of the rectangular duct.

4. Corresponding Relation Between Rectangular Duct and Round Duct

Circular Duct Diameter, in.	Length of One Side of Rectangular Duct a, in.																			
	4	5	6	7	8	9	10	12	14	16	18	20	22	24	26	28	30	32	34	36
	Length Adjacent Side of Rectangular Duct b, in.																			
5	5																			
5.5	6	5																		
6	8	6																		
6.5	9	7	6																	
7	11	8	7																	
7.5	13	10	8	7																
8	15	11	9	8																
8.5	17	13	10	9																
9	20	15	12	10	8															
9.5	22	17	13	11	9															
10	25	19	15	12	10	9														
10.5	29	21	16	14	12	10														
11	32	23	18	15	13	11	10													
11.5		26	20	17	14	12	11													
12		29	22	18	15	13	12													
12.5		32	24	20	17	15	13													
13		35	27	22	18	16	14	12												
13.5		38	29	24	20	17	15	13												
14			32	26	22	19	17	14												
14.5			35	28	24	20	18	15												
15			38	30	25	22	19	16	14											
16			45	36	30	25	22	18	15											
17				41	34	29	25	20	17	16										
18				47	39	33	29	23	19	17										
19				54	44	38	33	26	22	19	18									
20					50	43	37	29	24	21	19									
21					57	48	41	33	27	23	20									
22					64	54	46	36	30	26	23	20								
23						60	51	40	33	28	25	22								
24						66	57	44	36	31	27	24	22							
25							63	49	40	34	29	26	24							
26							69	54	44	37	32	28	26	24						
27							76	59	48	40	35	31	28	25						
28								64	52	43	38	33	30	27	26					
29								70	56	47	41	36	32	29	27					
30								76	61	51	44	39	35	31	29	28				
31								82	66	55	47	41	37	34	31	29				
32								89	71	59	51	44	40	36	33	31				
33								96	76	64	54	48	42	38	35	33	30			
34									82	68	58	51	45	41	37	35	32			
35									88	73	62	54	48	44	40	37	34	32		
36									95	78	67	58	51	46	42	39	36	34		
37									101	83	71	62	55	49	45	41	38	36	34	
38									108	89	76	66	58	52	47	44	40	38	36	
39										95	80	70	62	55	50	46	43	40	37	36
40										101	85	74	65	58	53	49	45	42	39	37
41										107	91	78	69	62	56	51	47	44	41	39
42										114	96	83	73	65	59	54	50	46	44	41
43										120	102	88	77	69	62	57	53	49	46	43
44											107	93	81	73	66	60	55	51	48	45
45											113	98	86	76	69	63	58	54	50	47
46											120	103	90	80	72	66	61	56	53	49
47											126	108	95	84	76	69	64	59	55	52
48											133	114	100	89	80	73	67	62	58	54
49											140	120	105	93	84	76	70	65	60	56
50											147	126	110	98	88	80	73	68	63	59
51												132	115	102	92	83	76	71	66	61
52												139	121	107	96	87	80	74	69	64
53												145	127	112	100	91	83	77	71	67
54												152	133	117	105	95	87	80	74	70
55													139	123	110	99	91	84	78	72
56													145	128	114	104	95	87	81	75
57													151	134	119	108	98	91	84	78
58													158	139	124	112	102	94	87	81
59													165	145	130	117	107	98	91	85
60													172	151	135	122	111	102	94	88

5. Method For Duct Calculation (equal friction method)

1)Draw schematic view of the duct system.

1)Make notes for air volume and mark clearly the elbow, the branch parts, the air discharge outlet.

1)Select one main ducting route (where the maximum static pressure loss occurs).

1)Select the air velocity for the main duct in accordance with the desirable air velocity.

	Typical design velocity (m/s)		
Main duct	Residence	Public building	Factory
	3.5~6.0	5.0~8.0	6.0~11.0

1)Since the velocity and air volume are fixed for main duct, then use the Friction loss chart to find standard friction loss.

2)Use air volume and friction loss to find corresponding duct size and velocity for each part of main duct through Frictions loss chart.

3)Find the dynamic loss of main ducting route according to the velocity. and Type of special fittings (elbows, junctions, regulating flaps, etc.)

4)Obtain the duct size and velocity of each branch duct based on the air volume and the same standard friction loss as for the main duct.

5)Find the dynamic loss of branch duct.

6)Calculate the total pressure loss.

6. Unit Conversion

- 1 inch water=248.8 N/m^2 (Pa)=0.0361 lb/in^2 (psi)=25.4 kg/cm^2=0.0739 in mercury
- 1 ft^3/min (cfm)=1.7 m^3/h
- 1 ft/min=5.08*10-3 m/s
- 1 inch=2.54 cm=0.0254m=0.08333ft

7. Recommended Outlet Velocity For Different Occasion

The permissible sound level and correspondingly maximum air velocity, is determined by the occasion.

Noise / dB(A)	Occasion	Maximum velocity / m/s
25	Studio, recording room	2
35	Cinema, hospital, library	3
40	Office, school, hotel	4
46	Bank, public hall	5
50	Store, post office	6
70	Factory	10